The Mechanical Design Of A Kinematic Mount For The Mid Infrared Instrument Focal Plane Module On The James Webb Space Telescope

Michael P. Thelen*[a], Donald M. Moore[a]
[a]Jet Propulsion Laboratory, California Institute of Technolgy
4800 Oak Grove Drive
Pasadena, CA 91109

Abstract—
The detector assembly for the Mid Infrared Instrument (MIRI) of the James Webb Space Telescope (JWST) is mechanically supported in the Focal Plane Module (FPM) Assembly with an efficient hexapod design. The kinematic mount design allows for precision adjustment of the detector boresight to assembly alignment fiducials and maintains optical alignment requirements during flight conditions of launch and cryogenic operations below 7 Kelvin. This kinematic mounting technique is able to be implemented in a variety of optical-mechanical designs and is capable of micron level adjustment control and stability over wide dynamic and temperature ranges.

TABLE OF CONTENTS

1. INTRODUCTION.....1
2. DESIGN DESCRIPTION 1
3. CONCLUSION 6
4. REFERENCES 7
5. ACKNOWLEDGEMENTS 7
6. BIOGRAPHY 7

1. INTRODUCTION

The Focal Plane Module (FPM) is an integral component of the Mid Infrared Instrument (MIRI) on the James Webb Space Telescope (JWST) science observatory. The FPM assembly contains a cryogenic, precision aligned detector assembly sensitive to wavelengths of light from 5-27 microns [1]. In order to achieve and maintain precision alignment, thermal isolation, and dynamic support of the suspended detector assembly, a unique and highly optimized athermal kinematic optical mount is implemented. The kinematic mount is a hexapod concept that offers efficient load path, six-axis adjustability, thermal isolation, sub micron positional stability, structural stiffness, and dynamic support. The mounting concept has been introduced with an overall design description in a paper by Sergio Valdez and Donald Moore [2]. The mounting concept is commonly referred to as a Moore Mount, named after the inventor Donald Moore who is a veteran structural engineer at the Jet Propulsion Laboratory.

The intent of this publication is to expand on the material already available in public literature and to show the unique applications of the Moore Mount as it was utilized in the design of the FPM for the JWST. The Moore Mount has been implemented uniquely in the MIRI FPM design in that it exhibits the design features of enduring a cryogenic environment, adopting an a-thermal approach to operational alignment, and maintaining a measured positional tolerance within the specific design requirements of the MIRI Project. These design elements will be presented in further detail.

2. DESIGN DESCRIPTION

The classic Moore Mount kinematic mount consists of six independent transverse members with fixed ends. The ends are fixed by utilizing the preload of spherical nuts mating to a conical section. The spherical nut configuration allows for adjustability during assembly, but repeatable and stable positioning upon the proper application of torque to the nut. It is necessary to develop a torque vs. tension curve for each unique hardware application in order to ensure proper torque is applied to the system. [3]

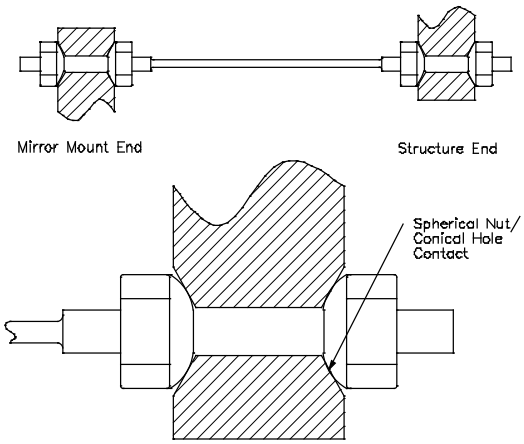

Figure 1. *Typical adjustment rod configuration of the Moore Mount with dual nuts that seat into countersunk holes. [2]*

*Michael.P.Thelen@jpl.nasa.gov; phone 1-818-354-6032;

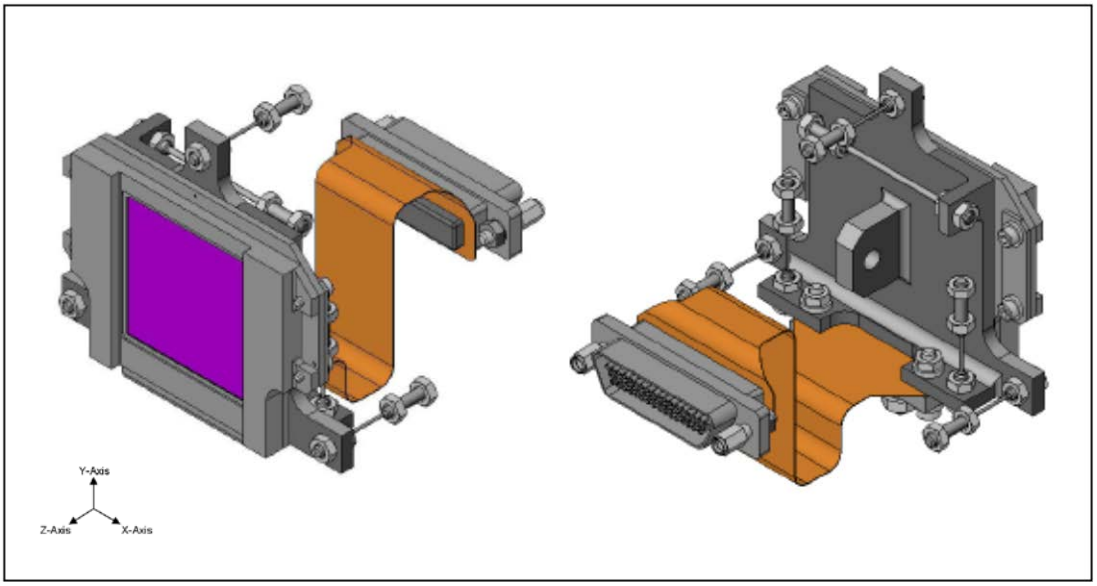

Figure 2. *Six Moore Mount members attached to the MIRI FPM Detector Assembly. Front and Back isometric views are displayed. Interface structure not shown. [4]*

Each support rod member of a typical Moore Mount consists of a threaded section at each end of the rod which interfaces to the spherical nuts. The central portion of the rod is the load bearing element of the member, consisting of an independently optimized cross section and length. This length meets the threaded ends with a machined radius. Each rod member is a monolithic structure. During the MIRI Project, each rod member was manufactured using specialized electrical discharge machining (EDM) fabrication techniques.

A kinematic mount is a technique of structurally supporting a suspended mass in a manner that constrains each of the six degrees of freedom; x-axis translation, y-axis translation, z-axis translation, tip, tilt, and rotation. A major benefit of the kinematic support approach is that of the suspended mass not being under constrained or over constrained in the mounted configuration. By engaging the suspended mass in a proper kinematic mount manner, the probability of distorting the supported mass by an over constrained condition is drastically reduced if not completely eliminated. Displacements in the position of the suspended mass from external sources such as coefficients of thermal expansion or forced displacements may then be purely resolved and controlled by any defined combination of any or all of the six independent degrees of freedom.

MIRI FPM Environmetal Design Considerations

The MIRI FPM detector mount is unique in that it is designed to endure an operational cryogenic environment of 6 Kelvin. The MIRI FPM detector assembly is mounted and aligned at room temperature, undergoes a warm launch, and is cooled to below 7 Kelvin once the spacecraft becomes operational in space. [1] The mission alignment requirements of the detector boresight to reference features are established for operational environments as follows:

- X,Y Positional Requirement $\leq \pm 50$ µm
- Z Positional Requirement $\leq \pm 200$ µm
- Tilt About X-Y Plane Requirement $\leq \pm 20$

Figure 3. *Operational positional tolerance requirements of every pixel on the Detector Array relative to a reference point on the mating interface plane. [4]*

The major design drivers of the MIRI FPM Moore Mount with respect to the MIRI Project environmental requirements are threefold:
1. Structurally support the detector assembly within the MIRI FPM. 2. Provide thermal isolation of the detector assembly to the rest of the hosting hardware. 3. Maintain a stable aligned configuration of the detector focal plane during all operational conditions.

1. Structural Support

Observation of the final rod design configuration in Figure2 will display three support rods arranged parallel to each other in one axis, two support rods arranged in parallel to each other but perpendicular to the aforementioned rods, and a single rod with an axial configuration perpendicular to the plane established by the independent axes of the rest of the rods. In summary, there are three support members in the Z-axis, two support members in the Y-axis, and one support member in the X-axis. This kinematic mount configuration allows for control of X, Y, and Z-axis translations, as well as tip, tilt, and rotations about each axis.

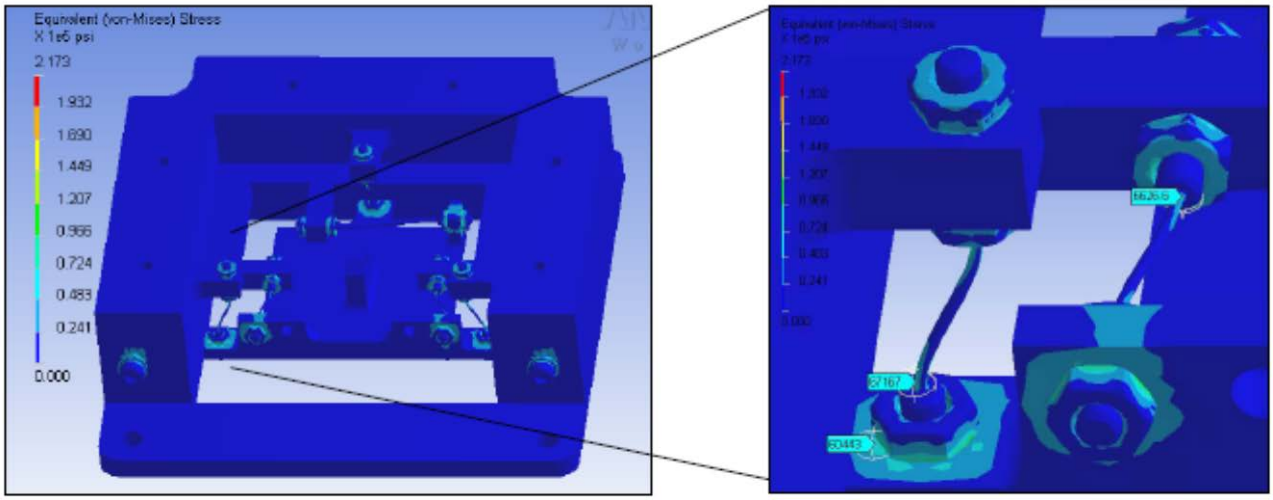

Figure 4. *Thermal stress analysis revealed the driving load case for member sizing to be the case of combined adjustment loads with resultant thermal CTE loading. [4]*

Due to optimization of the thermal isolation and buckling design parameters, the diameters of the rods are sized differently in each respective axis for the independent axial dynamic and thermal loads reacted. The resultant support structure is a robust and stable design with high stiffness. The first modal frequency response of this configuration is 854Hz, which readily meets the instrument first modal frequency requirement of 150Hz. [4]

The structural design is driven by three primary loading conditions:

a. Static displacement during alignment.
b. Dynamic loading of launch environments.
c. Resultant positional displacements of additive coefficients of thermal expansion.

The loads imparted to the structural supports during static displacement of alignment are locked into place and maintained once the alignment process is completed. [2] In addition to this static loading, the additive loading of environmental conditions is also included. Thus, a combination of alignment loads and dynamic launch loads is observed by the structural supports. Additionally, a combination of alignment loads and loads associated with the coefficients of thermal expansion (CTE) as the hardware cools from room temperature to less than 7 Kelvin is observed. The design driving load case combination is that which includes the stresses of thermal contraction.

The structural support was optimized for yield due to buckling loads for the stresses induced by the combination of alignment stresses and stresses resulting from CTE. Thus, the final sizing of the members was determined when the design loads for this scenario became marginal on yield.

It is likely this design could be optimized further by allowing classic yielding of the support structure. It is assumed that micro yielding is already inevitable and it is quite possible that classic yielding of the support structure occurs during the combined loading environments if alignment parameters are exceeded during assembly operations. Yet the stability and repeatability of this design is believed to be enhanced by the fact that it was designed to be functional in the elastic region of the support structure. This is not to indicate that using this design successfully in the plastic region is not possible, it simply was not fully explored as an option for this unique design.

Implementations of the Moore Mount design exist where a homogenous material is utilized across the interfaces of the support structure in order to minimize or nearly eliminate stresses associated with CTE, as well as maintain positional stability of an optical boresight. [2] The specifics and requirements of the MIRI FPM did not allow for this design approach to be adopted.

The MIRI FPM is housed in an Al 6061-T6 housing, which is material matched to the interface on the hosting Optical Bench Assembly. The base substrate of the detector assembly is SiC. Ti 15-3-3-3 is the material of choice for the support structure in this design, given its material properties of high strength, low modulus of elasticity, and low coefficient of thermal conductivity at cryogenic temperatures.

The Moore Mount design utilized in the MIRI FPM is driven by thermal isolation, as well as structural support during dynamic and cryogenic thermal environments. The resultant design is an athermalization utilized to maintain

required positional tolerances achieved during room temperature alignment. More discussion on the aspects of athermalization of the design are presented later, and the current focus is on the structural consequences of the athermalized design. The implemented design approach allows the thermal stress loads created by the different CTE values for the multiple materials used in the final assembly to be reacted in bending by the support structure during the cooling of the FPM from room temperature to 6 Kelvin. Reacting this bending load, combined with the already existing bending loads associated with alignment, while still maintaining the load stresses to be within the elastic region of the support structure material is the significant driving load case of this design. Allowing the design to engage the plastic region of the support structure may be acceptable. However as mentioned previously, in order to maintain the repeatable positional tolerance results before, during, and after dynamic and thermal events, it is desirable for the design of the MIRI FPM to reside solely in the elastic region of the support material.

2. Thermal Isolation

Proper operation of the detector assembly is dependent upon achieving and maintaining cryogenic temperatures below 7 Kelvin. [1] Additionally, provisions to anneal the detector assembly require the detector assembly to be able to heat itself to 20 Kelvin as needed for optimal science objectives. The thermal design parameters are achieved by way of thermal isolation of the detector assembly to the host hardware items. In order to optimize the thermal isolation, the design intent was to minimize the heat flow across the sections of the rods. Heat flow is described by the following equation:

$$Q = \frac{kA\Delta T}{L}$$

Where, Q = Heat Transfer, (W)
K =Coefficient of thermal conductivity, (W/mm·K)
T = Temperature, (K)
L = Length, (mm)
A = Cross-Sectional Area, (mm^2)

To optimize the thermal isolation aspects of the mounting concept, Q is reduced by minimizing cross sectional area, by minimizing the coefficient of thermal conductivity through material selection, and by optimizing the length of each member. The temperature delta associated with the design for the MIRI FPM was dictated by operational parameters and design requirements.

Minimizing heat transfer by minimizing cross sectional area and increasing the member length, is inversely related to the objectives sought in maximizing the already presented buckling load capacity, which requires maximizing cross sectional area and decreasing the member length. Heat transfer is dictated by the square of the member radius, and buckling is determined by the fourth power of the radius. Additionally, while heat transfer is determined by the length of the member, buckling is determined by the square of the length. As a result, the final rod geometry is driven more by the buckling load limits, but is optimized for purposes of minimized heat transfer.

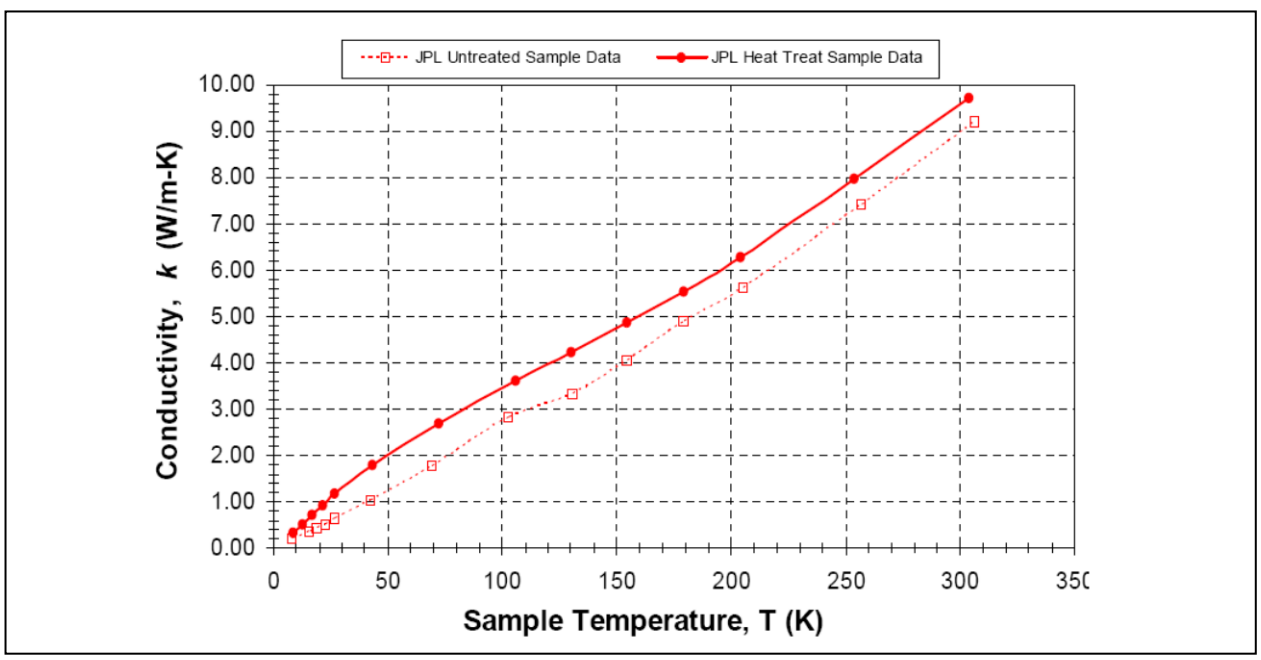

Figure 5. *Thermal conductivity as a function of temperature for treated and untreated Titanium 15V-3Cr-3Al-3Sn. [6]*

The most effective measure in driving the thermal isolation of this design was the material choice of the support rods, Titanium Alloy 15-3-3-3. This material has low modulus, and an extremely low coefficient of thermal conductivity at cryogenic temperatures. This material was selected and tested at JPL by the MIRI Project for its coefficient of thermal conductivity [5], and has been shown to have thermal conductivity lower than other Titanium alloys at cryogenic temperatures, comparable to Kevlar and G-10 Fiberglass, nearly an order of magnitude lower than Ti 6Al-4V. These results are displayed in Figure 5. [6]

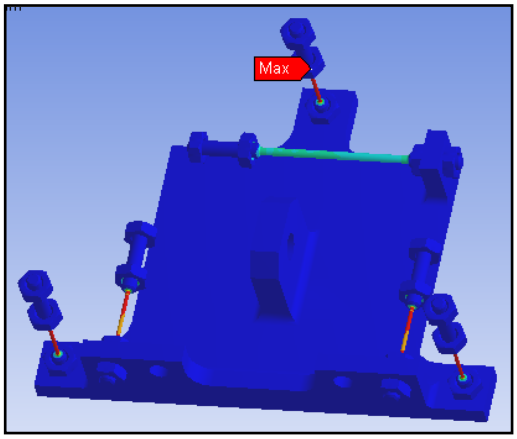

Figure 6. *Thermal analysis heat flux results across the support structure of the Detector Assembly. The entire support structure exhibits a heat load of 0.105mW for a thermal delta of 2.6 Kelvin. [4]*

Analysis of the detector assembly support structure thermal isolation characteristics indicates favorable results. Assuming a thermal delta of 2.6 Kelvin, from 9.5 Kelvin at the hosting hardware interface to 6.9 Kelvin at the detector thermal mount hardware, a total heat load of 0.105mW is determined across the entire support structure. The entire heat load allocation to all the support structure at the time of analysis was 0.250mW. Analysis of each individual support rod axis indicates the composition of the 0.105 mW heat load is divided as follows: X-Axis = 0.0259mW, Y-Axis = 0.0331mW, and Z-Axis = 0.0456mW. These values are cumulative values for all support rods in a given axis. These analysis results are based on the assumptions provided, and are displayed graphically in Figure 6.

2. Athermalization of the Mounting Structure

Athermalization is a design technique whereby the different individual CTEs within a mechanical assembly of different materials are accounted for such that the resultant net motion of a desired point within the mechanical assembly due to the effects of CTE is zero as the overall temperature of the assembly changes. The alignment requirements of the MIRI FPM detector boresight and active array are more stringent in the X-axis, Y-axis, tip and tilt, than in the Z-axis. The support structure is designed and optimized for this configuration of requirements. The support structure is a-thermalized in the sensitive axes and planes, and allows the detector array to translate in the Z-axis during cool down from room temperature to operating temperatures. The design analysis results of translations in all axes during cool down is as displayed in Figure 7. Using the thermal vector distortion analysis results with accepted design margins, it is possible to align the detector boresight to a measured nominal position and allow the boresight to translate as presented while cooling from room temperature to operating temperatures. As long as the boresight of the detector assembly is aligned in X,Y, and Z to less than 20 microns from nominal at room temperature, the positional tolerance of the detector boresight at all operating temperatures can be expected to meet the instrument positional requirements displayed in Figure 3.

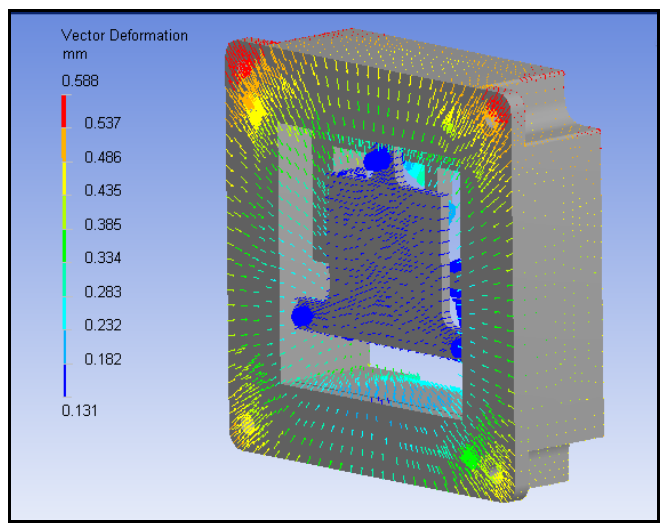

Translation	µm
X-Axis	14
Y-Axis	30
Z-Axis	140
Tip/Tilt about X-Y Plane	2

Figure 7. *Thermal vector distortion analysis results determine axial and rotational translations of every pixel on the detector assembly during the transition from room temperature to 6 Kelvin, readily meeting the JWST Project requirements, shown in Figure 3. [4]*

Practical Discussion

A large portion of the stresses encountered in the Moore Mount design are due to the static displacements of alignment operations. It is important to note that prior to any adjustment being made, there is already an inherent beginning stress in the assembly. This stress is due to the tolerance stackup of all the design features of the Moore Mount hardware.

For the MIRI FPM, special attention was given to the support rod design features of concentricity and run out tolerances of the position of the axis of the support structure to the axis of each threaded end. Additionally, it was important that the threaded ends of the rods were concentric to themselves as well as to the threaded end on the opposing end of the support rod. Finally, the feature tolerances of the conical sections on the mating interfaces were tracked for true position of the through hole, as well as perpendicularity of the conic section to the through hole. All feature tolerances were accounted for with best effort inspection techniques, and such features were utilized to determine an estimated initial stress state of the hardware assembly.

It is also common to experience a settling of the hardware after application of a mechanical shock load, or a thermal cycle load. Once the hardware is properly seated, it can be expected to exhibit sub micron positional tolerance stability. [2]

3. CONCLUSION

The Moore Mount has been successfully implemented as a kinematic mount within the FPM Assembly of the James Webb Space Telescope. All presented analysis has been verified and qualified by a flight test program. The Moore Mount has been uniquely adopted in this design to conform to the rigorous requirements associated with the cryogenic environment of the FPM, along with stringent operational alignment requirements. The Moore Mount concept in this application allows for precision alignment, sub micron positional stability and repeatability in thermal and dynamic environments. This kinematic design has also been athermalized in order to maintain the optical position of the detector assembly boresight from the room temperature alignment process to cryogenic operating temperatures.

Further study and understanding of the Moore Mount is suggested to characterize the behavior of the mount in the plastic region of mechanical deformation. Furthermore, fabrication, assembly, and alignment techniques may also be further explored and optimized.

Future uses of the Moore Mount concept may reference the cryogenic application of this elegant and efficient hexapod approach to kinematic mounts.

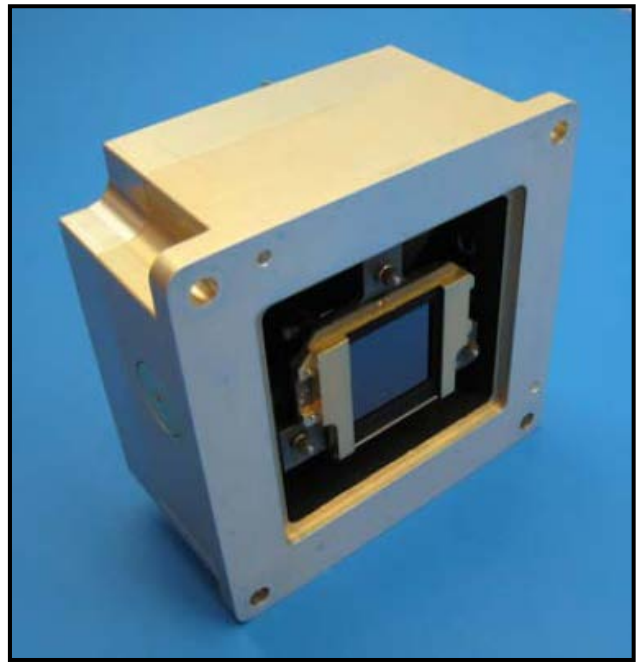

Figure 8. *A fully assembled Focal Plane Module utilizing the Moore Mount as the support structure to kinematically mount the Detector Assembly. The FPM is part of the Mid Infrared Instrument on the James Webb Space Telsecope. [1]*

4. REFERENCES

[1] Sukhatme, K.G., Thelen, M.P., Cho, H. and Ressler, M.E., "Development of a Focal Plane Module for JWST/MIRI," Proc. SPIE, Vol. 7021, 70210N (2008).

[2] Valdez, S., Lamborn, A.U. and Moore, D.M., "The Moore Mount," Proc. SPIE, Vol. 7018, (2008).

[3] Lewis, D.F., "Summary of Tension Versus Torque Testing of the Focal Plane Module Support Rods – MIRI," #3536-DL-06001, JPL Internal Memorandum, (January 12, 2006).

[4] Thelen, M.P. and Ressler, M.E., "MIRI Focal Plane Module Mechanical Design Peer Review Package," JPL Internal Report, (August 12, 2004).

[5] Rodriguez, J.I. and Rivera, J.G., "Thermal Conductivity of Titanium 15V-3Cr-3Al-3Sn (Untreated Beta Titanium Alloy)," 3542/055/AT&ST/JGR/04, DFM #43-05.03.02, JPL Internal Memorandum, (April 30, 2004).

[6] Rodriguez, J.I. and Tseng, H., "Thermal Conductivity of Titanium 15V-3Cr-3Al-3Sn (Treated Beta Titanium Alloy)", JPL3542/059/AT&ST/HT/04, DFM #45-05.03.02, JPL Internal Memorandum (August 24, 2004).

5. ACKNOWLEDGEMENTS

The research and design described in this paper was conducted at the Jet Propulsion Laboratory, California Institute of Technology, under a contract with the National Aeronautics and Space Administration.

Donald Moore provided mentoring and guidance in the mechanical design of this kinematic mount. It is a personal honor to have studied under this great engineer and friend.

Jose I. Rodriguez provided data and guidance regarding the cryogenic thermal design presented.

Michael E. Ressler is the JPL MIRI Project Scientist.

6. BIOGRAPHY

Michael P. Thelen is a Senior Mechanical Engineer for the Jet Propulsion Laboratory, California Institute of Technology. Michael began working at JPL in 1996, and has worked as a mechanical engineer on a variety of Flight Projects, including Cassini, DS-1, MSP01, MER, JWST, and ExoMars. His design contributions include work in robotics, telecommunications, opto-mechanical systems, cryogenics, and organic chemistry systems. He has been included in US Patents D487715 and D488093. He has a BSME from Loyola Marymount University, and an MBA from the University of Southern California.