High Altitude Supersonic Decelerator Test Vehicle

Brant T. Cook[1], Guillermo Blando[2], Andrew Kennett[3], Max Von Der Heydt[4], John Luke Wolff[5], and Mark Yerdon[6]
Jet Propulsion Laboratory, California Institute of Technology, Pasadena, CA, 91109

The Low Density Supersonic Decelerator (LDSD) project is tasked by NASA's Office of the Chief Technologist (OCT) to advance the state of the art in Mars entry and descent technology in order to allow for larger payloads to be delivered to Mars at higher altitudes with better accuracy. The project will develop a 33.5 m D_o Supersonic Ringsail (SSRS) parachute, 6m attached torus, robotic class Supersonic Inflatable Aerodynamic Decelerator (SIAD-R), and an 8 m attached isotensoid, exploration class Supersonic Inflatable Aerodynamic Decelerator (SIAD-E). The SSRS and SIAD-R should be brought to TRL-6, while the SIAD-E should be brought to TRL-5. As part of the qualification and development program, LDSD must perform a Mach-scaled Supersonic Flight Dynamics Test (SFDT) in order to demonstrate successful free flight dynamic deployments at Mars equivalent altitude, of all three technologies. In order to perform these tests, LDSD must design and build a test vehicle to deliver all technologies to approximately 180,000 ft and Mach 4, deploy a SIAD, free fly to approximately Mach 2, deploy the SSRS, record high-speed and high-resolution imagery of both deployments, as well as record data from an instrumentation suite capable of characterizing the technology induced vehicle dynamics. The vehicle must also be recoverable after splashdown into the ocean under a nominal flight, while guaranteeing forensic data protection in an off nominal catastrophic failure of a test article that could result in a terminal velocity, tumbling water impact.

Nomenclature

D_0 = parachute nominal diameter
m_{test} = test vehicle mass at deployment of concern
m_{mars} = Mars entry vehicle mass at deployment of concern
ρ_{test} = test atmospheric density at deployment of concern
ρ_{mars} = Mars atmospheric density at deployment of concern

BLDT = Balloon Launched Decelerator Test
SFDT = Supersonic Flight Dynamics Test
SIAD-E = Supersonic Inflatable Aerdynamic Decelerator, Exploration Class
SIAD-R = Supersonic Inflatable Aerdynamic Decelerator, Robotic Class
SSRS = Supersonic Ring-Sail Parachute
PEPP = Planetary Entry Parachute Program

I. Introduction

The engineering task is daunting: take a 4.7 m blunt body vehicle, provide mechanical interfaces for three different and undeveloped pieces of technology, strap on an avionics system and enough instrumentation to characterize all technologies during flight, fly it at Mach 4 in a Mars Mach-scaled atmosphere (~180,000 ft Earth altitude), and make it affordable. And one more thing: don't let the vehicle be the reason a test fails. These are the "marching orders" passed down to a small team at NASA's Jet Propulsion Laboratory in the winter of 2011. Over the following two years the team has grown substantially, comprising over 100 personnel, and spanning across

[1] Lead Mechanical System Engineer, Section 352M, 4800 Oak Grove Dr, Pasadena, CA, 91109, MS 321-220, AIAA Member
[2] CSA Cognizant Engineer/CTM, Section 385D, 4800 Oak Grove Dr, Pasadena, CA, 91109, MS 321-220
[3] Balloon, SIAD, and Parachute Interface Cognizant Engineer, 352E, 4800 Oak Grove Dr, Pasadena, CA, 91109, MS 321-220
[4] Panoramic Mirror Assembly Cognizant Engineer, 352A, 4800 Oak Grove Dr, Pasadena, CA, 91109, MS 303-410
[5] Electrical Mechanical Lead/ Camera Mast Assembly Cognizant Engineer, 385D, 4800 Oak Grove Dr, Pasadena, CA, 91109, MS 321-220
[6] Mass Properties Engineer/Motor Interface and Alignments Engineer, 352B, 4800 Oak Grove Dr, Pasadena, CA, 91109, MS 321-220

multiple disciplines and NASA centers (Ames, CSBF, Goddard, JPL, Kennedy, Langley, Marshall, and Wallops). With the Flight System Critical Design just over the horizon, it is a prudent time to capture the configuration challenges experienced thus far, perform a detailed look at the sub-systems that must function in perfect harmony to qualify three important future entry, descent, and landing technologies, and finally, explore payload capabilities for future test programs.

II. Test Architecture Overview

The baseline test architecture was chosen based on very similar previous tests performed by NASA prior to the Viking mission, called Planetary Entry Parachute Program (PEPP) and Balloon Launch Decelerator Test (BLDT). The architecture, in a nutshell, uses a 34 MCF High altitude balloon to lift a payload to an altitude of ~120,000 ft. The vehicle hangs from the balloon at a specified, preset elevation angle and once float is obtained the vehicle is released from the balloon. Immediately following separation from the balloon spin motors are fired to produce the vehicle angular momentum required to follow a predetermined trajectory. Once max spin rate is obtained solid rocket motors are ignited and the vehicle accelerates to a specified velocity and altitude. Figure 1 shows the BLDT/PEPP architecture.

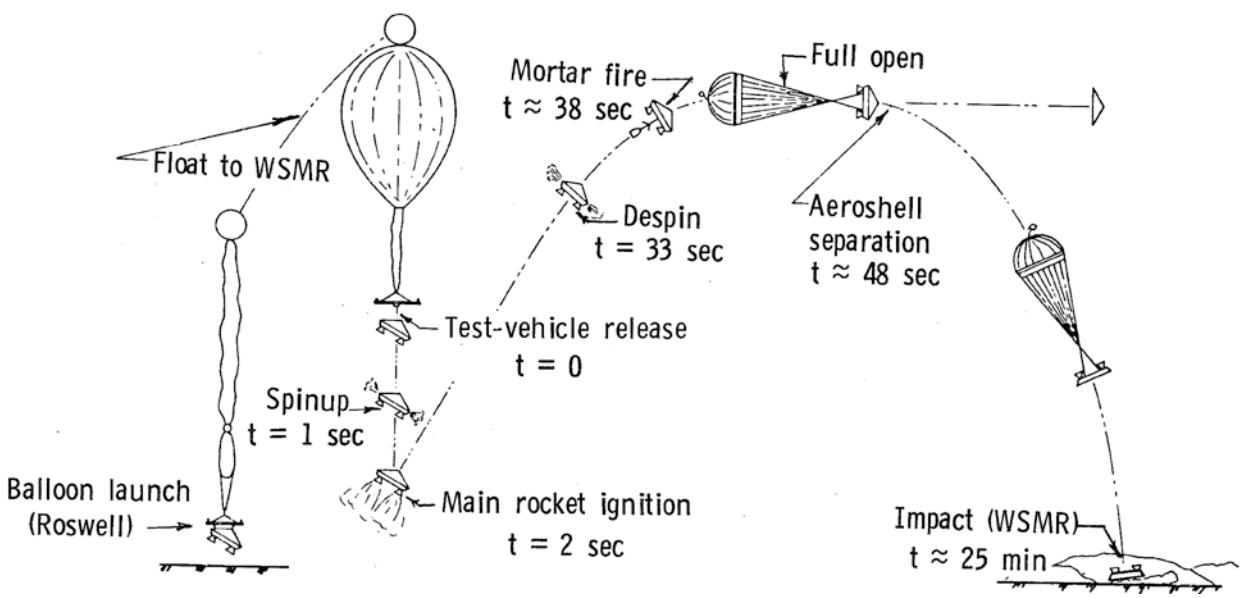

Figure 1: Overview of the Viking Balloon Launch Decelerator Test (BLDT) and Planetary Parachute Exploration Test (PEPP) Test Architecture. Note: Times relate to a general BLDT flight.[1]

The baseline SFDT architecture is very similar to both BLDT and PEPP because the idea was born from them. The major difference is the addition of a SIAD and Parachute Deployment Device (PDD) as well as the increase in velocity requirements. While this initially seemed trivial, evidence to the contrary will be discussed. A pictoral of the SFDT flight architecture can be seen in Figure 2.

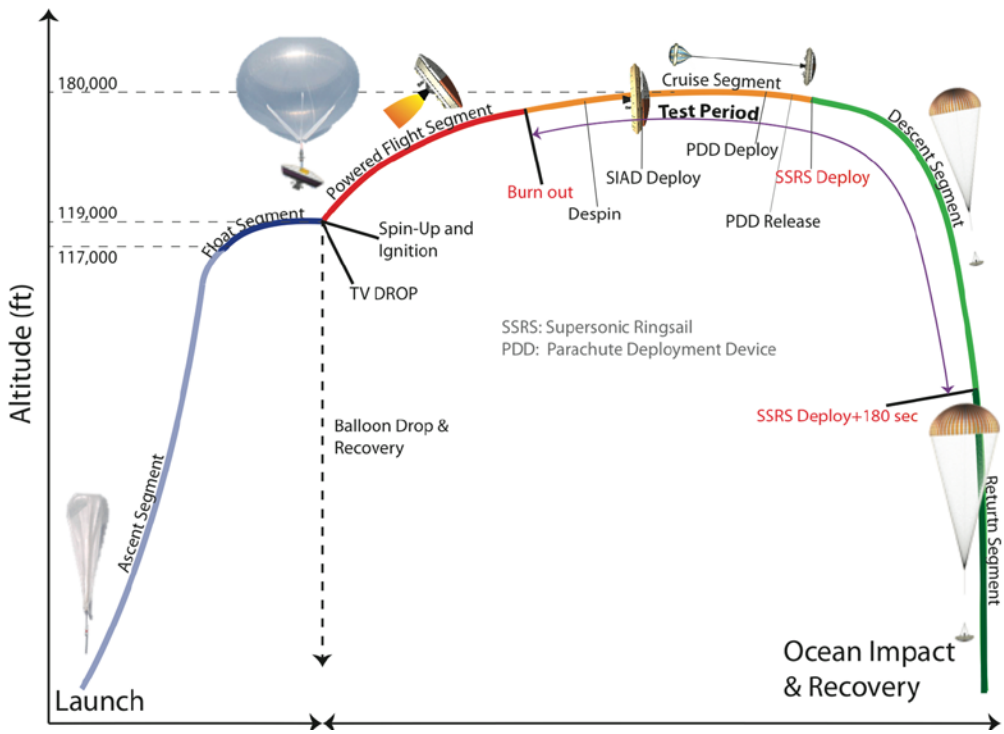

Figure 2: Supersonic Flight Dynamics Test (SFDT) Architecture

The altitude is selected as a Mach scaled representation for a Mars entry flight. Mach scaled for a full scale vehicle is defined as an altitude that produces an air density ratio with respect to Mars atmosphere equal to a test vehicle mass to Mars entry vehicle mass ratio. The equation is as follows.

$$\frac{m_{test}}{m_{Mars}} = \frac{\rho_{test}}{\rho_{Mars}} \tag{1}$$

Upon arriving at condition a set of spin down motors are fired to bring the vehicle to a nominal 0 deg/sec spin rate. At this time a Mars like entry timeline begins and all test articles are deployed. The vehicle descends and is recovered and all data is obtained and analyzed. The current test plan calls for four test flights. 3 flights will be designated for SIAD-R and the fourth for SIAD-E.

III. Launch Architecture: No new ground, or so we thought.

The SFDT launch architecture was initially thought to be fairly straight forward. If a group of young engineers in the 70's could build a similar sized test vehicle, load it with solid rocket motors and a test article, hang it from a high altitude balloon, launch it to 120,000 ft, and hit the big red button, why couldn't we? As it turns out, the "devil is in the details." There are a few major differences to SFDT when compared to any other previous program.

First, SFDT is required to test two separate test articles in one test: the SSRS and SIAD. The SIAD requires the test vehicle to reach speeds up to Mach 4. All previous flights of this kind only reached speeds in the low Mach 2 range. The increase of required velocity produces significant increases in downrange distances. BLDT and PEPP were performed at White Sands Missile Range where they required ~50 km downrange clearance while SFDT requires ~250 km downrange clearance. After a year-long study it was determined that there are very few places on Earth that can support our mission within the schedule, test conditions, and cost specified. The project is currently working with the Navy to propose the Navy's Pacific Missile Range Facility as the site to host the testing.

The second major difference is a shift in NASA's safety culture. BLDT and PEPP were both launched using a human-driven balloon launch platform. This is a standard launch technique employed by NASA's Columbia Scientific Balloon Facility (CSBF) when launching scientific payloads today. An image of Viking BLDT testing shows the launch set-up.

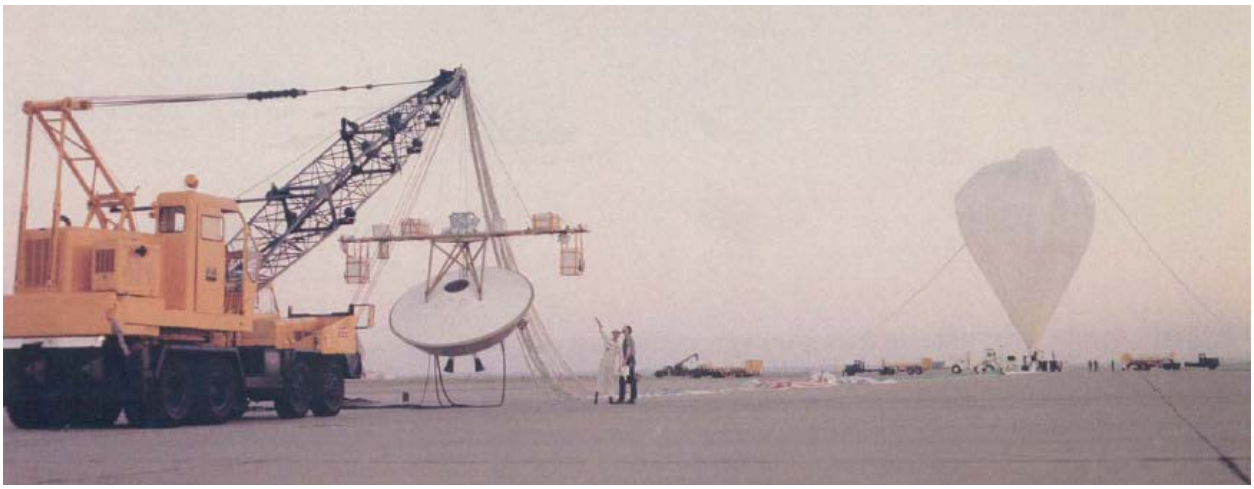

Figure 3: Viking BLDT on the Launch Pad in White Sands, New Mexico, 1972

Initially it was assumed that SFDT could capitalize on existing CSBF technology with a minimum cost impact to the project. However, after many discussions it was determined that a crewed launch platform was not a feasible solution when considering the safety implications to the operators of driving around and releasing a large solid propellant rocket motor. This realization has led to much development work by CSBF towards a launch tower approach.

The proposed launch tower is an 80 ft tall stationary tower with a pivot table used to orient the layed out balloon along the predominant 1000 ft altitude wind vector. The balloon would be layed out on the pivot table, inflated while being held by a spool truck, and released. The balloon would rise over the launch tower until a release device separates the balloon train from the launch tower. Figure 4 represents the current launch configuration for SFDT.

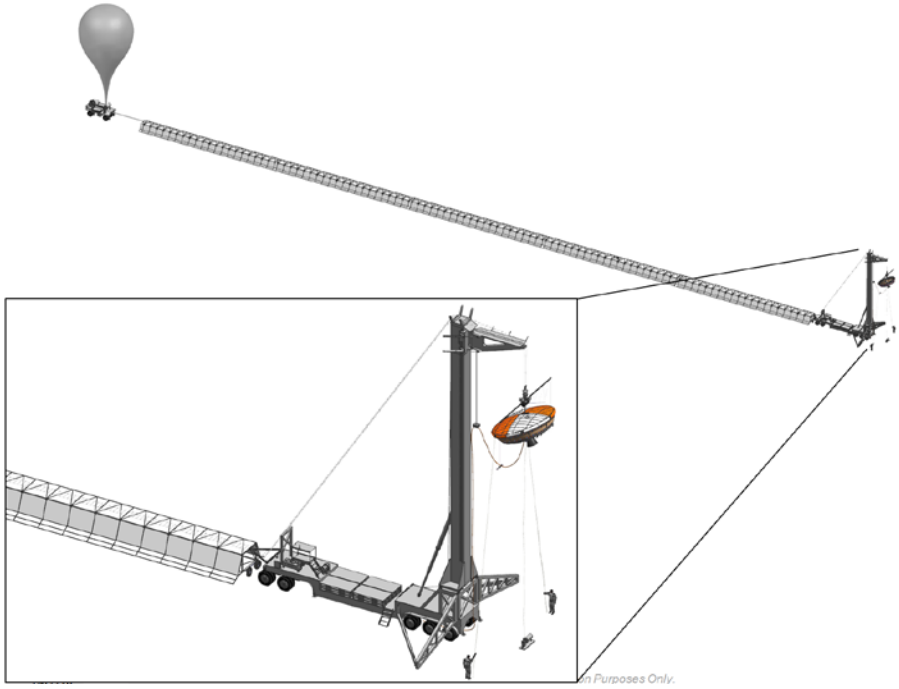

Figure 4: SFDT Launch Schematic

The potential for large off-axis winds that could produce large dynamic snatch loads upon deployment has significantly driven the design of the vehicle balloon fitting interface. The details of this interface will be discussed in more detail later.

IV. Vehicle Configuration Trades: Single or Multiple Motors?

All Mars entry vehicles to date have employed a mortar deployed parachute due to the need to precisely control the deployment timing. Significant impulses are required to accelerate a large mass (~120kg), nearly instantaneously to approximately 50 m/s. In order to avoid large dynamic disturbances to the entry vehicle leading into parachute opening, which is generally the largest deceleration event experienced during the descent sequence, every Mars entry vehicle has located the parachute on the vehicle centerline. Naturally, the SFDT vehicle began its life with the parachute located exactly where it would be in future flight vehicles. This, however, would not last long.

Fundamentally, if the parachute is on the centerline aft end of the vehicle the delta V propulsion system is not. The design team began working to configure a vehicle that had multiple solid rocket motors positioned around a central core. Initially this was not believed to be a challenge because both Viking BLDT and PEPP programs had very similar configurations. They each had either 8 Titan IIIC staging solid rocket motors or 12 Falcon M58A2 small rocket motors. Both motor types were highly canted (~30 - 33.5 deg) and clustered around a central core.

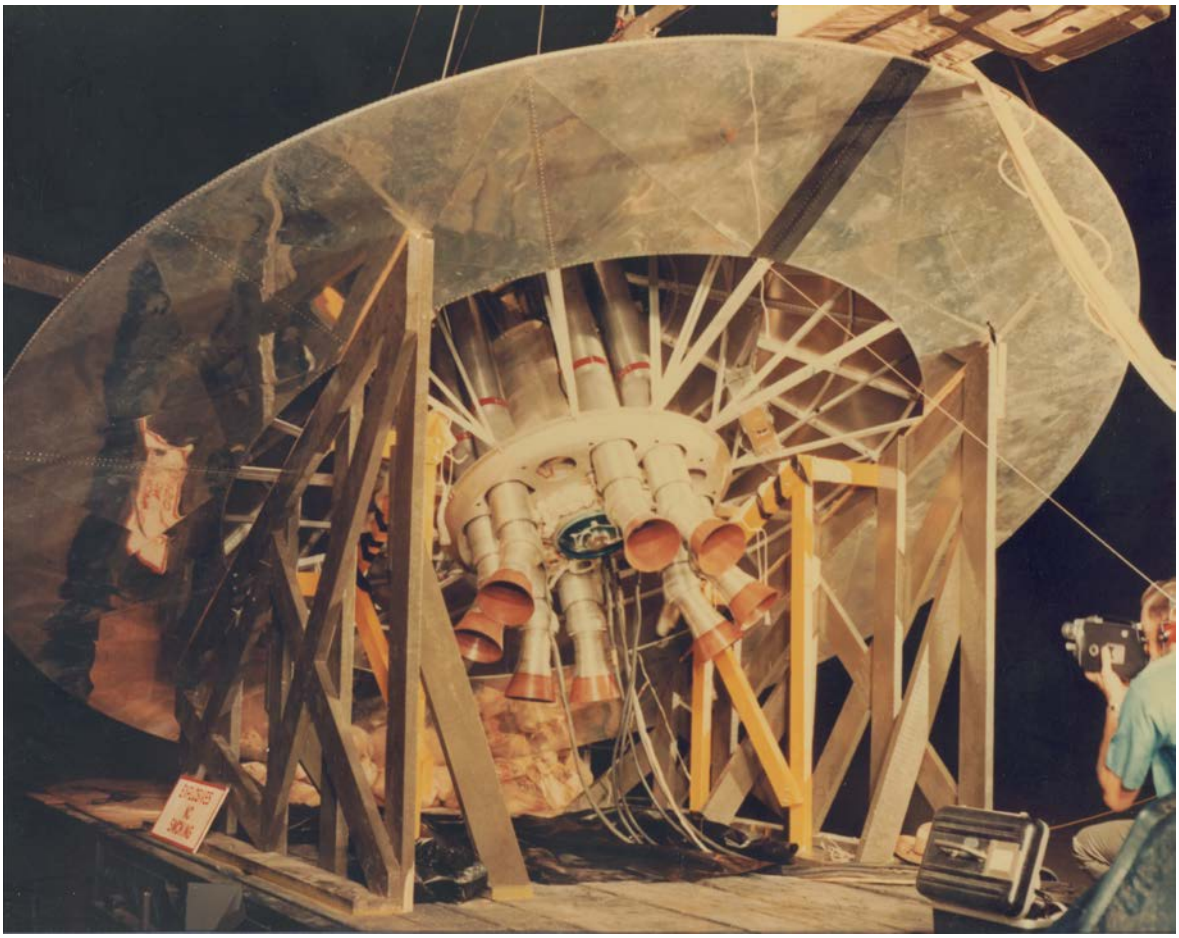

Figure 5: PEPP Test Vehicle shown on ground support stand.

However, as discussed previously, SFDT is fundamentally different than previous test flights in that it is required to attain speeds up to Mach 4, which requires a substantial increase in impulse. After many discussions it was concluded that due to cost and schedule constraints, it was not practical to develop new motors, specifically with regards to developing large impulsive solid rocket motors with large nozzle cants. Thus the team began configuring a significant number of configurations of commercially available solid rocket motors. Figure 6 is a snapshot of some of the configurations explored.

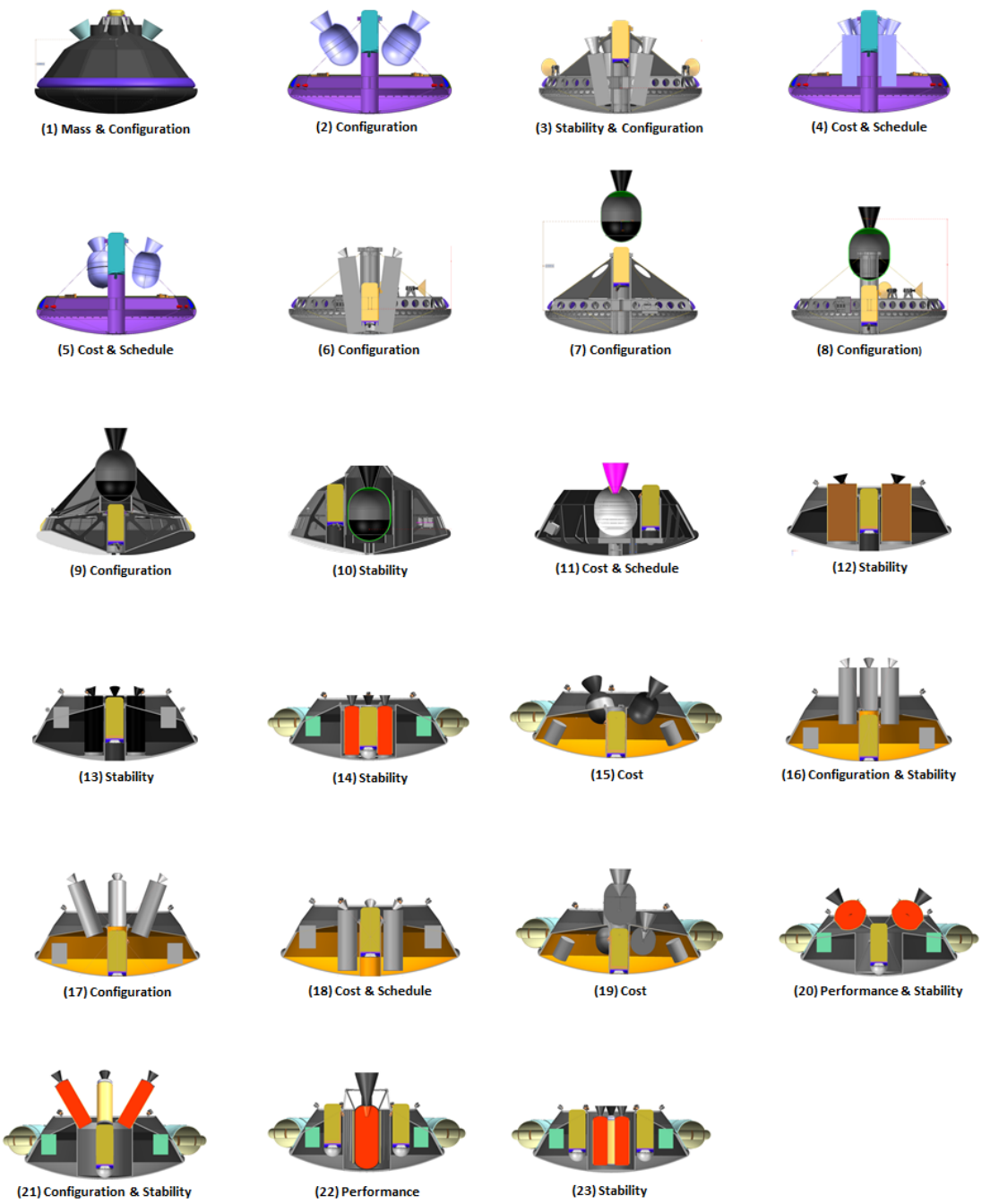

Figure 6: Pictoral Subset of Vehicle Configurations

The team looked at two different possible test architectures, combined and individual: a combined test that would test both the parachute and the SIAD in a single flight, and an individual architecture where two different flight tests would be used to test the SIAD and parachute. The team explored using single and multiple rocket stages, single or multiple motors, different off the shelf motors, and finally different mechanical configurations of a given motor. A tabular flow chart look at the design space explored can be seen in Figure 7.

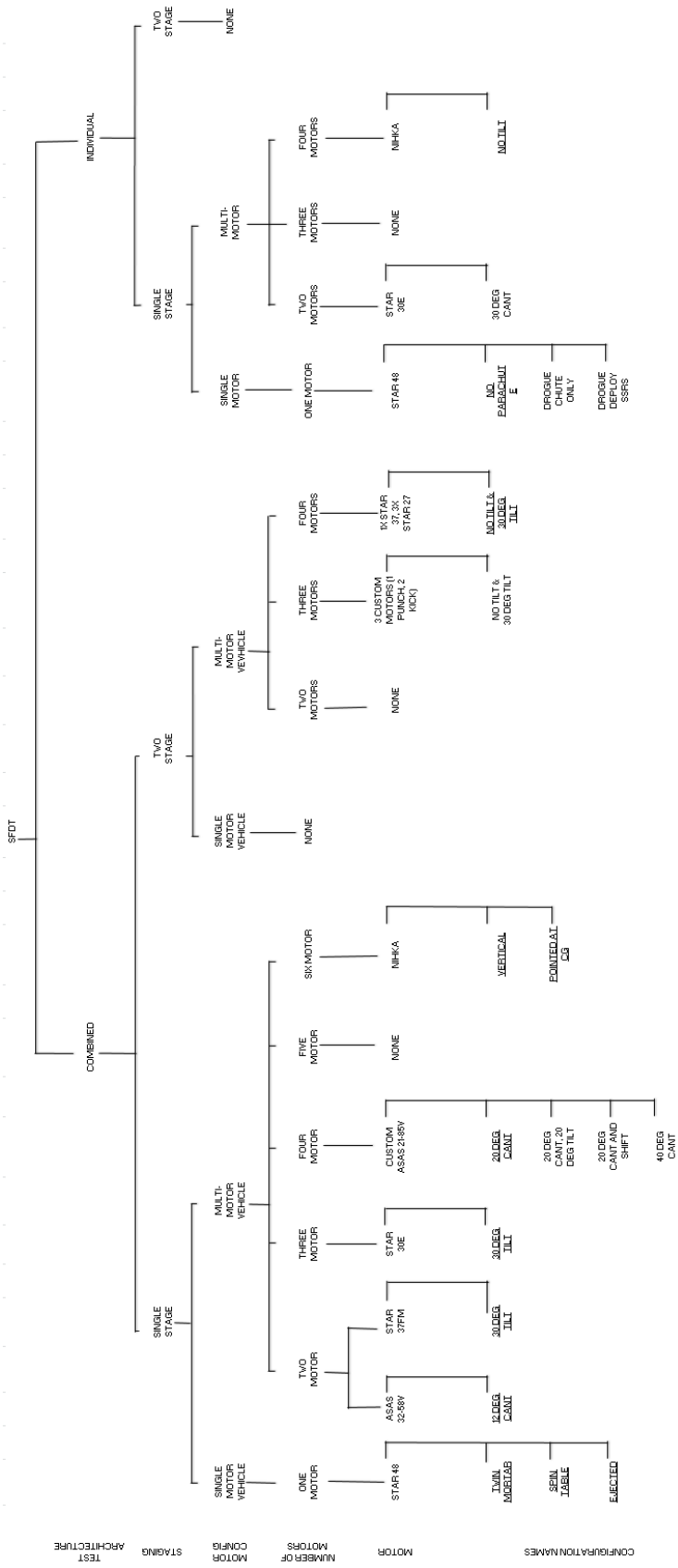

Figure 7: Delta V Motor Configuration Design Space

The design space was further constrained by mass. Since we would be going to higher speeds and carrying two large technologies for testing, and using the same size high altitude balloon with the same lift capability, we are inherently more mass constrained. Since we are more mass constrained than past projects we are highly sensitive to the reduction in a propulsion systems' mass fraction (defined as the ratio of propellant mass/propellant system mass). Due to inefficiencies of packaging and scar mass associated with multiple motor configurations, it was finally determined, after months of configuration efforts, that there was only one effective solution; use one large single solid rocket motor on the vehicle center line and move the parachute off the centerline of the vehicle. This decision was the only path forward given the highly constrained design space, but would certainly lead to many design issues as the team moved forward trying to eject the largest supersonic chute ever deployed from an entry vehicle off center from the vehicle centerline.

V. Vehicle Subsystems

The flight Vehicle has many different sub-systems that must function together to yield a successful test flight. Figure 8 shows an exploded view of the baseline SFDT test vehicle.

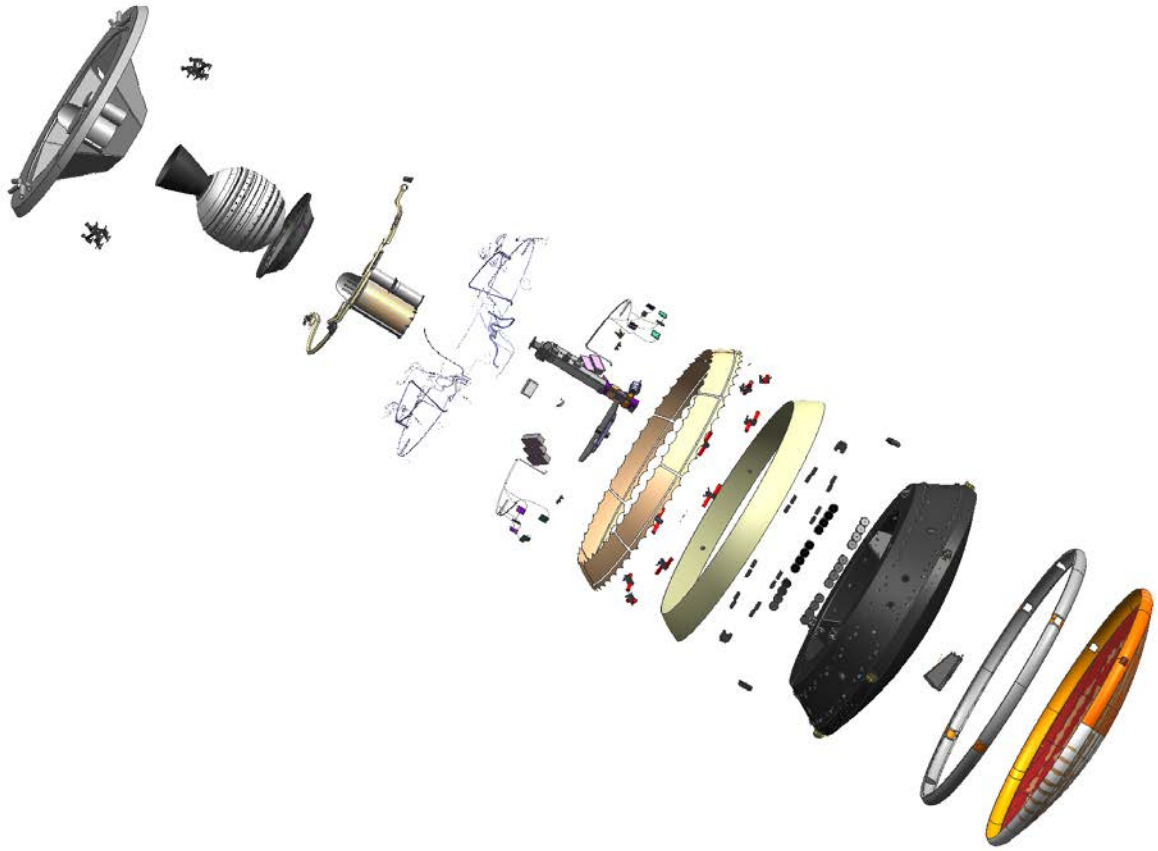

Figure 8: Exploded View of Vehicle by sub-system

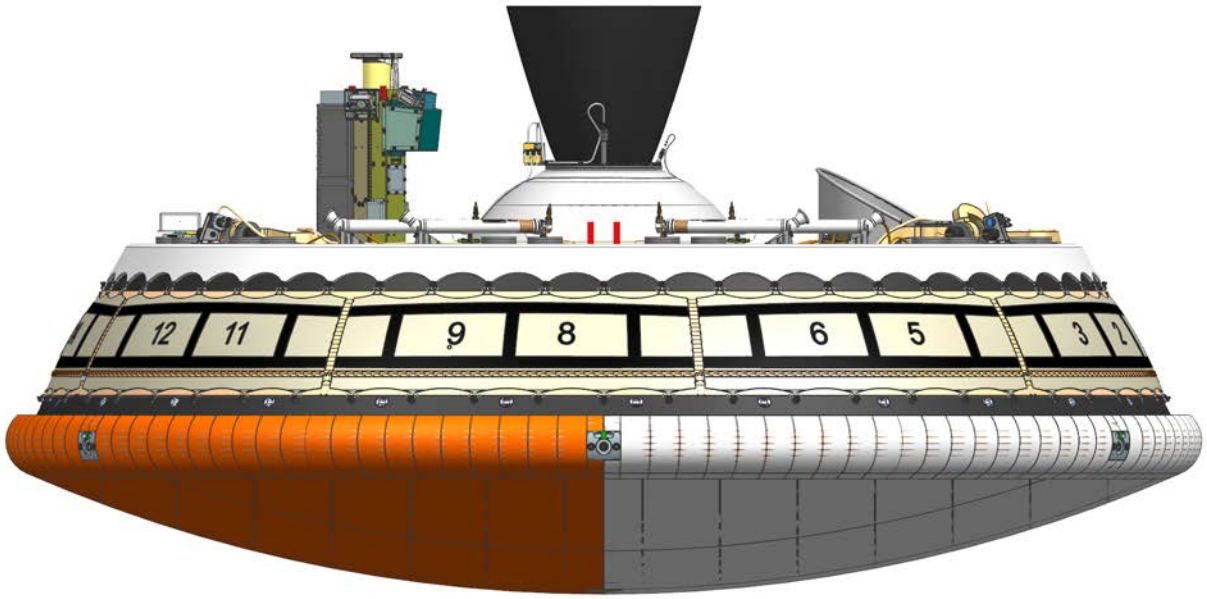

Figure 9: Flight Ready SFDT Vehicle, SIAD-R

A. Core Structure Assembly and Shoulder Fairing Assembly

The CSA provides interfaces for all components that must fly. It also defines the outer mold line (OML) of the vehicle. The Shoulder Fairing acts as the vehicle radome and completes the OML.

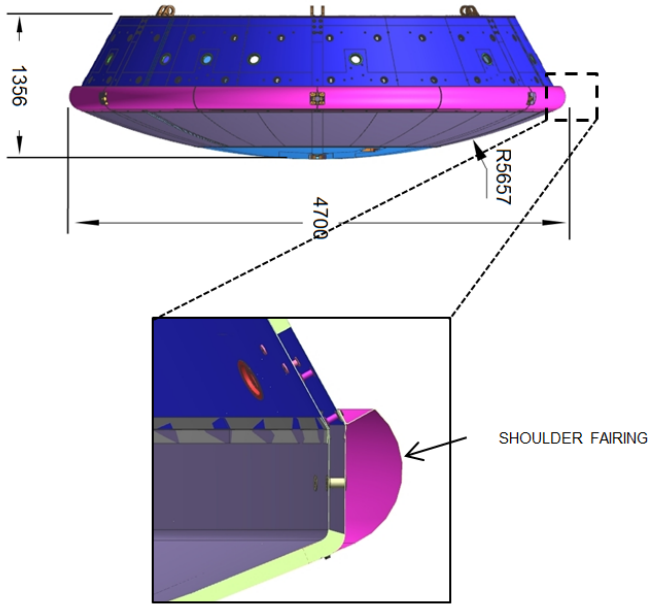

Figure 10: CSA and SFI with major dimensions

The outer mold line was chosen to represent JPL's best estimate for a SIAD-equipped future Mars entry vehicle. This notional vehicle is documented as a Design Reference Vehicle (DRV) and a Mars mission has been defined to fly the DRV, referred to as the Design Reference Mission (DRM). An overlay of the current SFDT vehicle with the Orion OML, Mars 2018, and the LDSD project DRV OML can be seen in Figure 11.

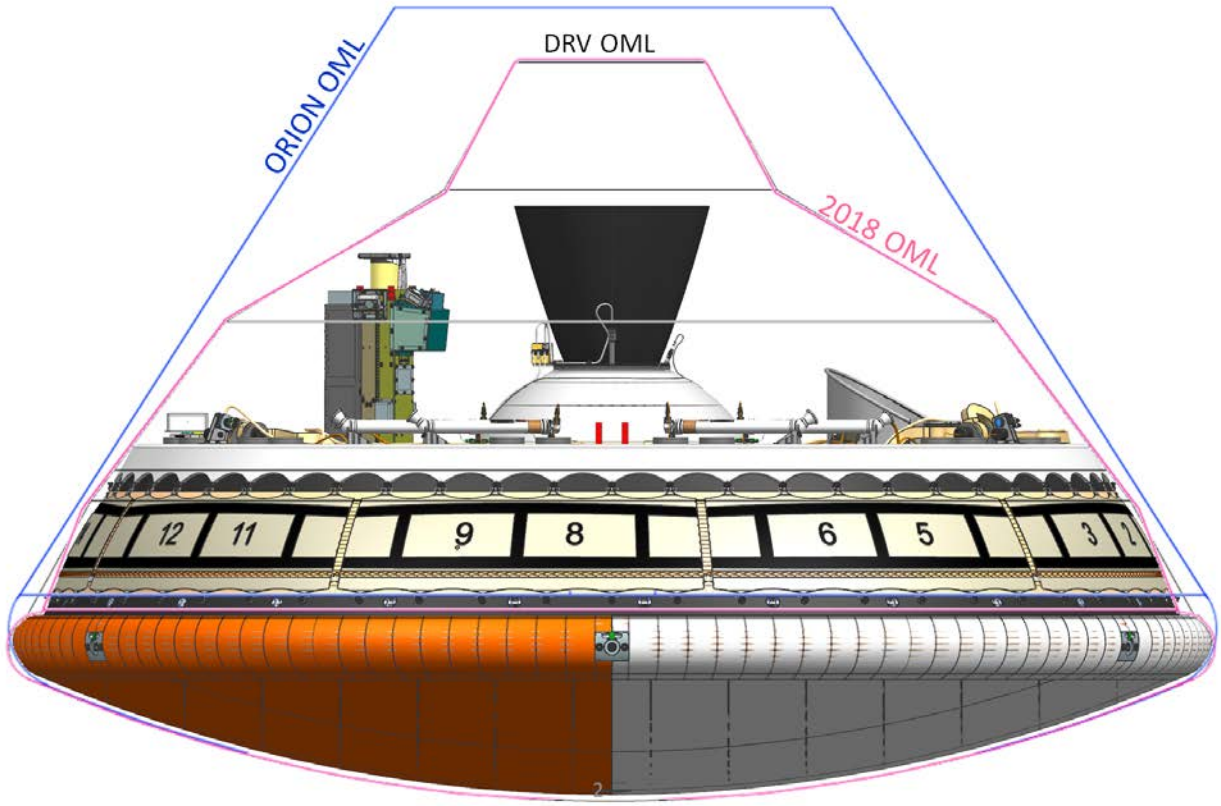

Figure 11: Outer Mold Line Overlay

The CSA is broken up into three regions: Heatshield region, SIAD region, and Top Deck region. The heatshield is a spherical blunt body, also referred to as a sphere cap. The SIAD region is a ~29 degree conical section of an entry vehicle, truncated behind the SIAD interfaces. The top deck is specific to the test vehicle and works to transfer large radial loads produced upon parachute opening through the vehicle. Internally the vehicle has 6 structural ribs also required to transfer load through the vehicle. A cross section defining the major regions of the vehicle can be seen in Figure 12.

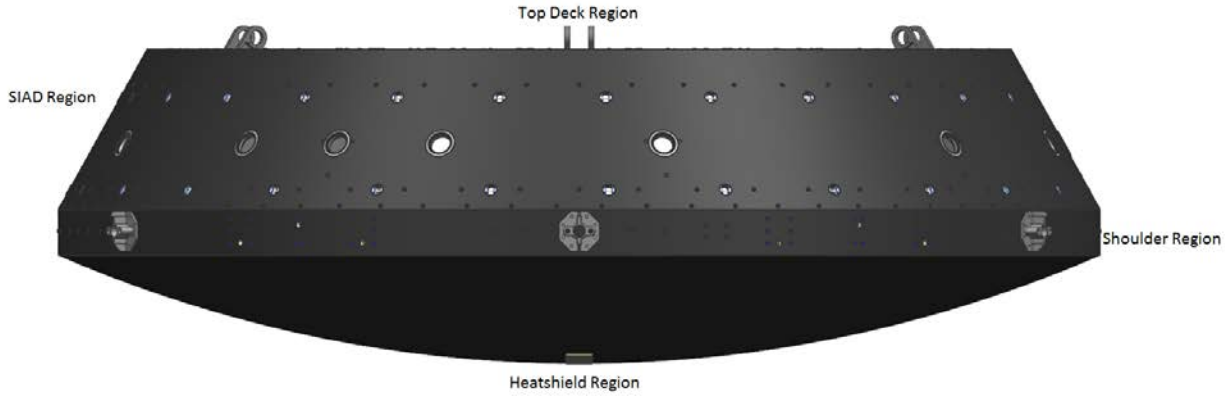

Figure 12: Vehicle Cross Section (regions labeled)

The driving load for the CSA is parachute opening at 94,000 lbs applied at a vehicle angle of attack (AOA) of 30 degrees.

B. Balloon Fitting

The balloon interface is effectively an adjustable u-joint that creates a single point pivoting interface between the balloon train and test vehicle. The fitting can be adjusted through its range in order to change the hang angle of the vehicle between 60 and 73 degrees off of the horizon. The vehicle is shown below in a nominal, min, and max hang angle state.

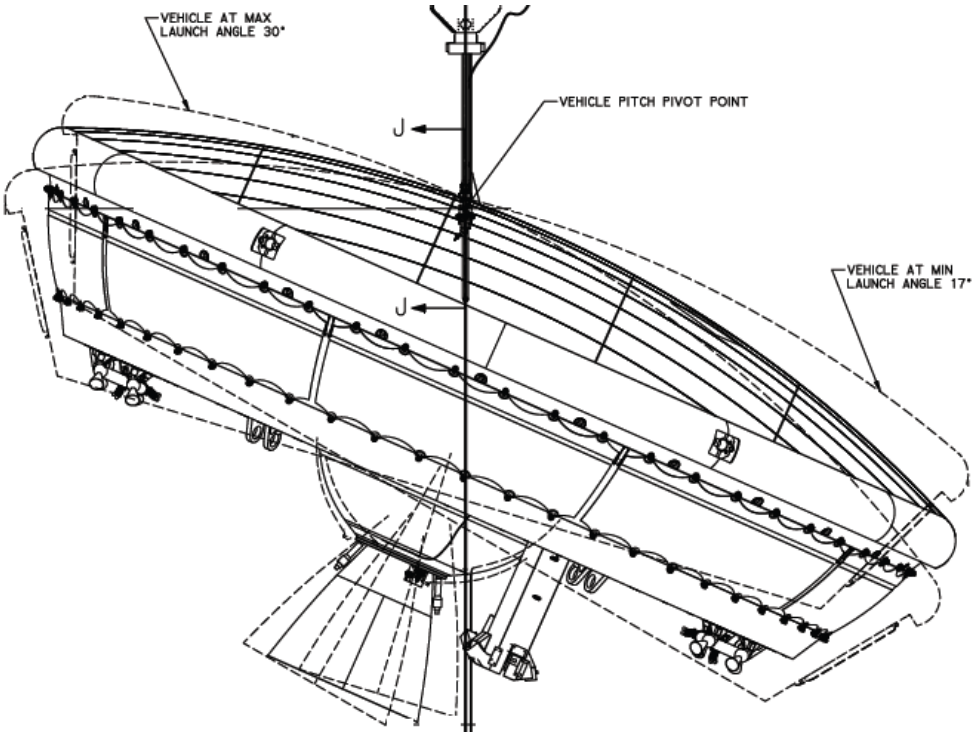

Figure 13: Vehicle Hang Angle Adjustment Range (17°-30° off the vertical)

The hang angle is adjustable via a lead screw linkage that locates the pivot assembly along a track running radially along the heatshield. The balloon fitting consists of 3 pivot axis: 2 pitch and 1 roll axis. The second pitch pivot is required due to a range of motion constraint within the mechanism. The pivot axis are shown in Figure 14.

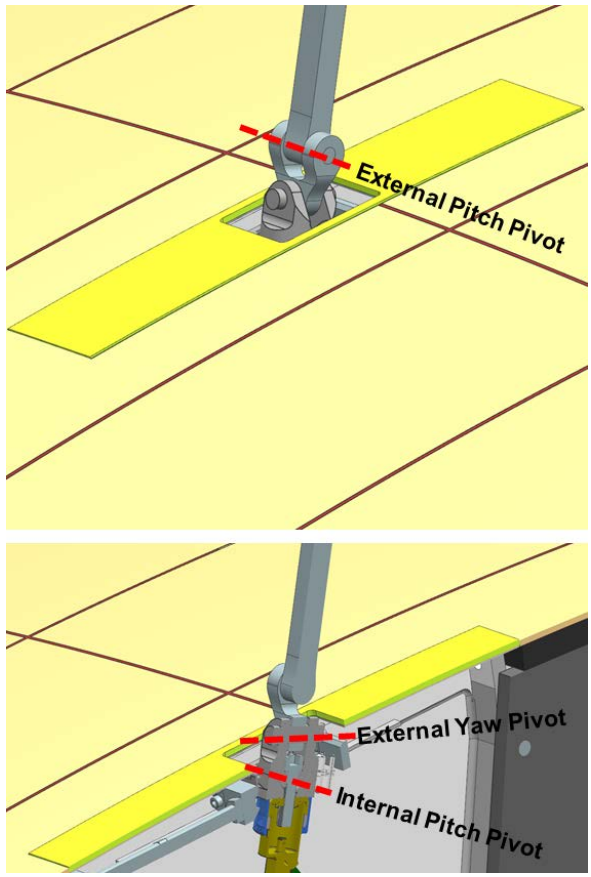

Figure 14: Balloon Fitting Pivot Axis

Other than allowing for hang angle adjustments, the Balloon Fitting must separate the vehicle from the balloon train upon a drop command. Within the fitting are two separation connectors that allow for ground commanding to the vehicle while connected and also provide initialization for all vehicle timers upon separation. The balloon fitting is a single point interface in order to avoid separation induced tip off rates that cause elevation pointing errors which propogate downrange as targeting errors for Mach, dynamics pressure, and altitude. The separation induced tip off rates must be less than 0.1°/sec.

The driving load case for the balloon fitting is a balloon launch dynamically induced load. In high off-axis winds the balloon can position itself such that it leans out in front of the balloon train tie down point on the launch tower by as much as 18 degrees. Upon release the balloon train quickly tries to realign itself between the vehicle cg and balloon cg. This creates a large snatch dynamic load to the vehicle. The balloon interface has been designed to accommodate up to 19,000 lbs applied load at a 40 deg half cone angle to the nominal free hang load vector. It must be able to withstand these loads at any position throughout the stroke of the fitting. This envelopes the dynamics of the balloon launch event.

C. SIAD

The SIAD consists of 1X SIAD softgood, 9X gas generator manifold assemblies, 1X retention and restraint cover, 9X internal diffusers, 2X pressure transducers, 6X strap load transducers, 27X thermocouples, 3X LEDs, and an internal SIAD Camera.

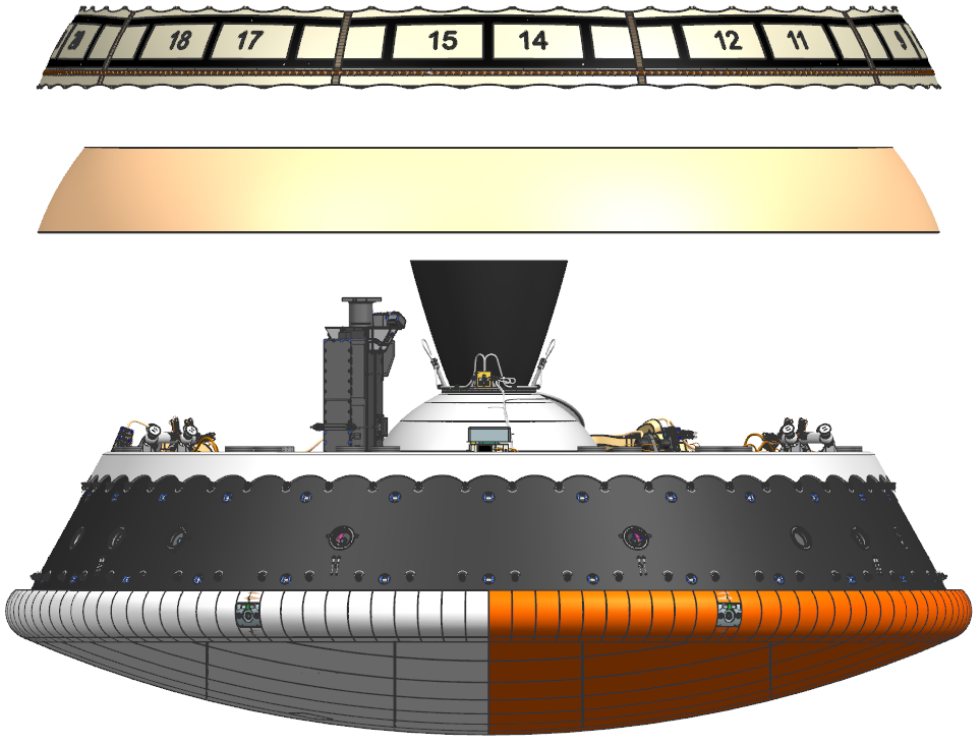

Figure 15: SIAD (partially exploded)

The SIAD will be a 6m attached torus (SIAD-R) or an 8m isotensoid (SIAD-E). Currently the first three SFDT flights are SIAD-R and the forth is a SIAD-E. SIAD-R is discussed thoroughly in "SIAD-R: A Supersonic Inflatable Aerodynamic Decelerator for Robotic missions to Mars"[2]. SIAD-E is discussed thoroughly in "Development and Testing of an 8 Meter Isotensoid Supersonic Inflatable Aerodynamic Decelerator"[3]. No further detailed discussion of these test articles will occur in this paper.

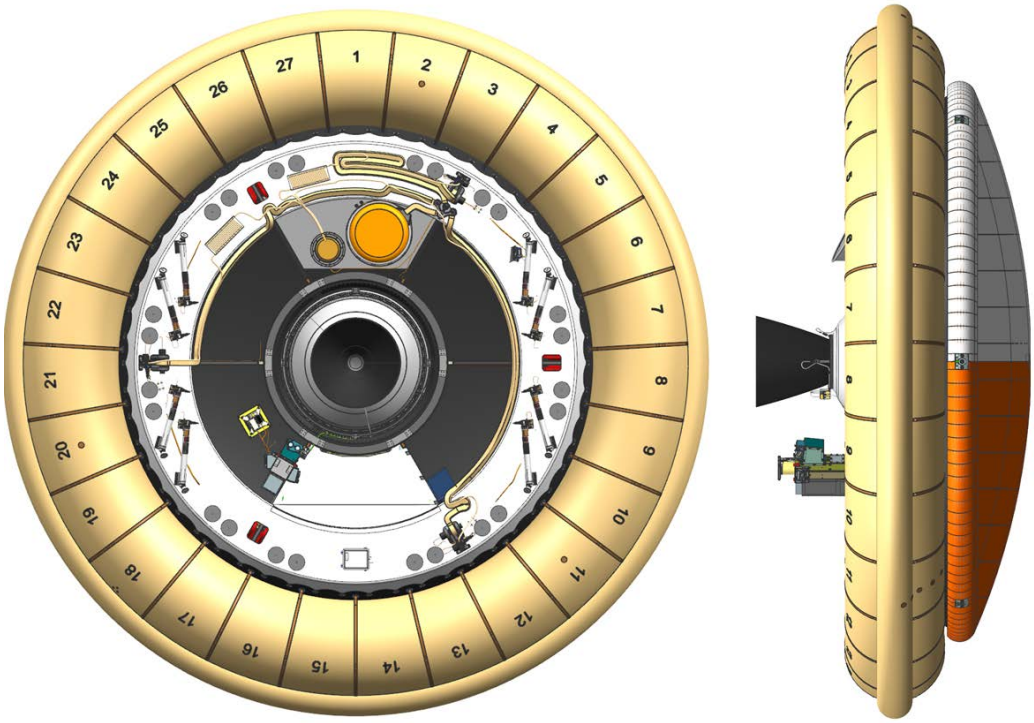

Figure 16: SIAD-R on SFDT Vehicle

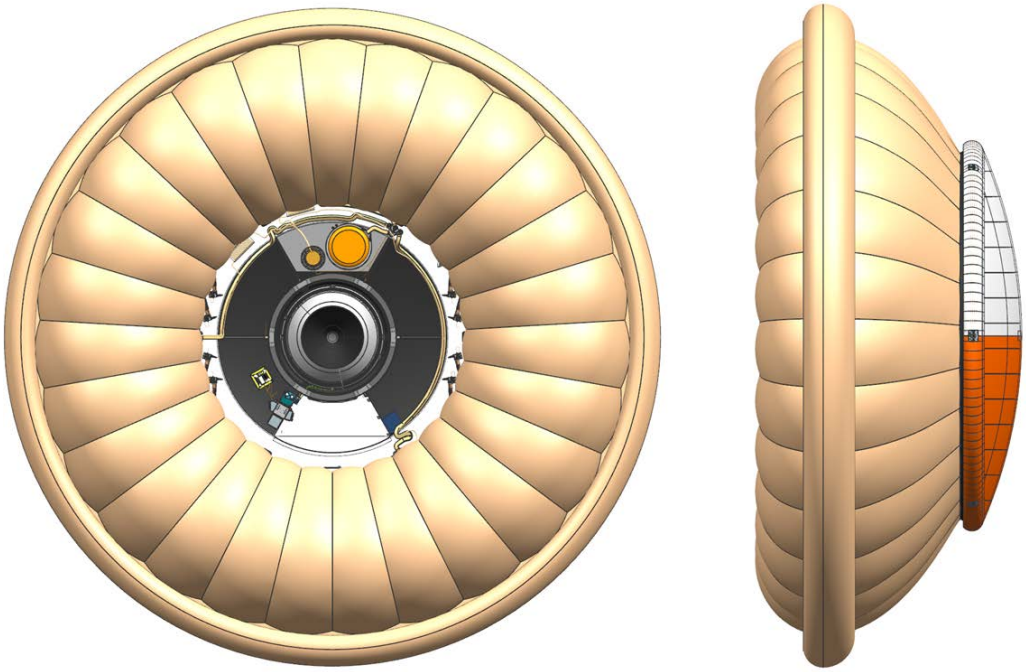

Figure 17: SIAD-E on SFDT Vehicle

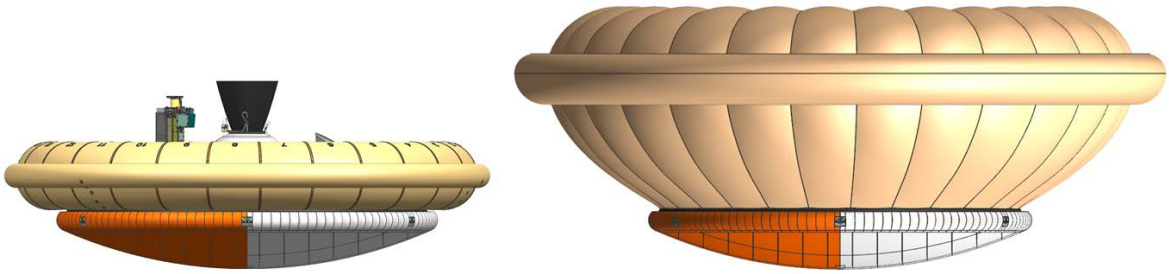

Figure 18: Side by Side Comparison, SIAD-R and SIAD-E

The gas generator manifold uses off the shelf automotive gas generators from Autoliv. There are two gas generators grouped together per manifold and fired sequentially. The gas generators are a hybrid high pressure argon fill with a pyrotechnic hot gas generator. These two systems work together to produce pressure into the SIAD and minimize the outlet gas temperature. The gas generator manifold assembly is shown in Figure 19.

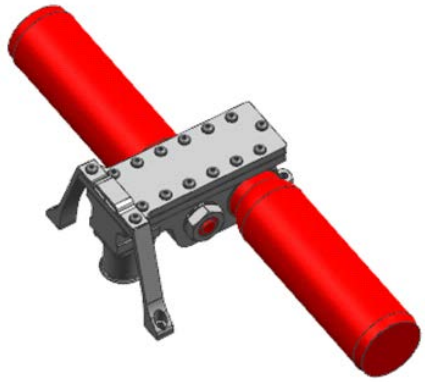

Figure 19: Gas Generator Manifold Assembly

The SIAD-E requires 9 gas generators in order to achieve initial inflation, at which time the free flowing atmosphere pressurizes the SIAD via inlet ducts spaced equally around the perimeter of the SIAD.

D. Parachute

The parachute system consists of 1X 33.5m D_0 diameter ring-sail parachute, 1X 4.4 meter trailing ballute (also known as Parachute Deployment Device (PDD)), 1X PDD mortar, PDD and SSRS rigging, as well as 3X PDD bridle line release fittings. The parachute installation, as it is installed on the SFDT vehicle is shown in Figure 20.

Figure 20: Parachute Installation in SFDT (stowed)

The parachute, at 33.5m D_0, would be the largest supersonic parachute ever flown. The largest previous supersonic parachute was flown on MSL and was 21.5 m D_0. This is a 2.5X increase in drag area, which produces drag forces in excess of 120,000 lbs. Details of the parachute development can be found in "Low Density Supersonic Decelerator Parachute Decelerator System"[4]. Figure 21 shows the parachute system in its two deployed states.

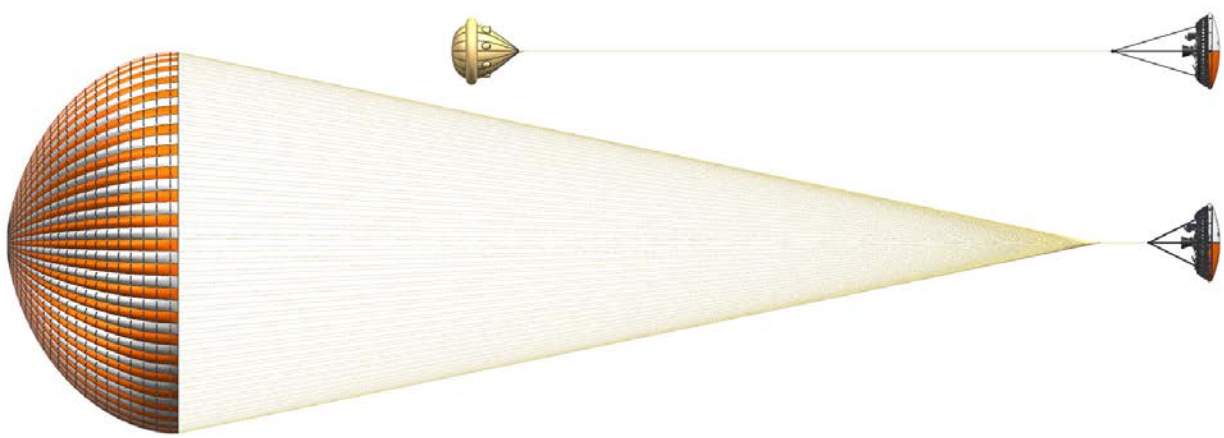

Figure 21: Parachute Installation on SFDT (deployed)

The parachute bridle fittings are integral with the CSA and provide 3X 60,000 lb load pins as an interface to the bridle lines. The mechanical team must also provide 1X SSRS can, 1X PDD interface adapter, and bridle rigging interface tie down brackets.

The driving SFDT design loads for the parachute installation hardware are the parachute full open load of 94,000 lbs, the PDD deployment load of 25,000 lbs from mortar fire and the PDD steady state drag load of 2,000 lbs applied at a 30 degree angle to the parachute can during parachute extraction.

The most challenging element to the parachute installation with regards to vehicle accomodation is the bridle line routing. The rigging must be routed around the top deck of the vehicle, avoid all top deck equipment, be protected from the severe thermal environment during motor firing, and deploy without snagging any components, especially the main motor nozzle, and finally, reside over the top of a 2000 degree F rocket nozzle. The details of the bridle rigging design as well as the testbed required to develop the system are discussed in "Rigging Test Bed Development for Validation of Multi-Stage Decelerator Extractions"[5]. The most likely area for snag hazards is where a bridle line passes very close to a spin motor group on its route to the bridle fitting.

E. Main Motor

The main motor assembly consists of a main motor adapter, a Star48B long nozzle solid rocket motor, a safe and arm device (SAD), 2X explosive transfer lines (ETL) for motor initiation, 8X thermocouples, 1X pressure transducer, and all the associated motor mounted harnessing. The total impulse of the Star48 is not required to achieve test conditions, and thus, the motor will be off-loaded by ~20%. Even after this off-load, the motor is over 50% of the loaded vehicle mass at drop from the balloon. All elements of the Main Motor Installation are shown in Figure 22.

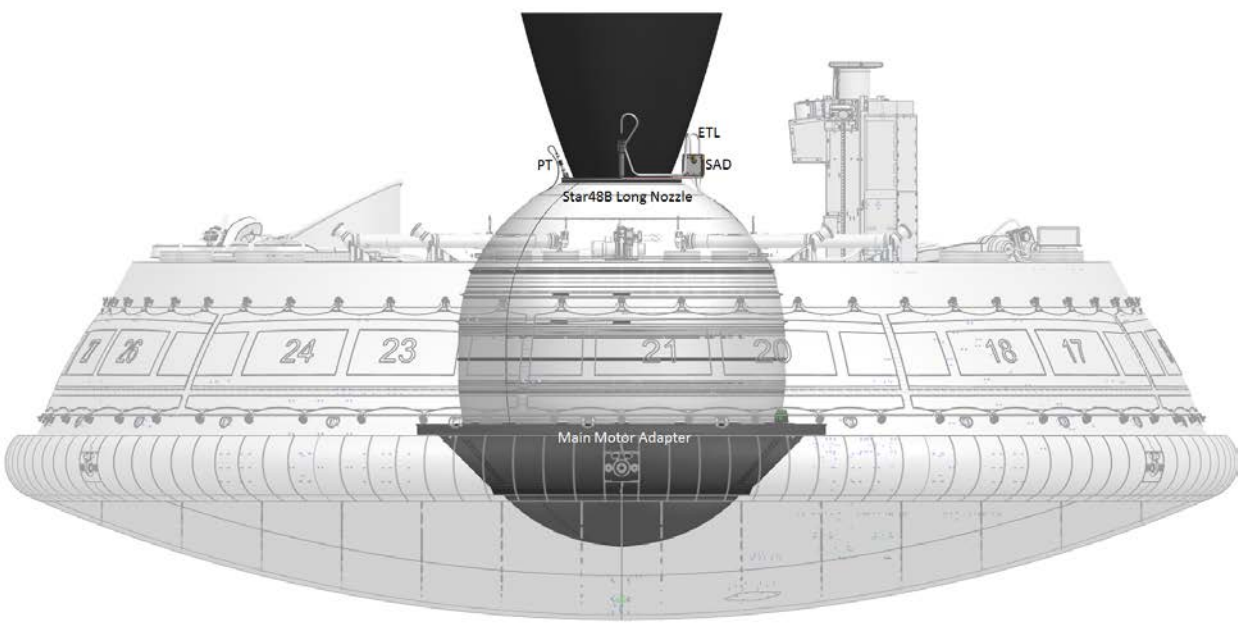

Figure 22: Main Motor Installation

The main motor is one of the critical alignments on the vehicle. It is important to align the thrust vector along the vehicle Z axis and through the vehicle X-Y cg. The motor is aligned solely through design tolerances. An effort has been made to minimize the tolerance stack up between the Vehicle Mechanical Coordinate System (VMCS) and the main motor thrust vector.

The vehicle cg and cross products are balanced to be on the centerline of the vehicle as defined by the VMCS. The expected total thrust vector angular misalignment is less than 0.42 degrees and the thrust vector to cg offset is less than 35 mm.

F. Spin Motor

The spin motor system consists of 8X ejection seat rocket motors from Nammo Talley, 8X sets of spin motor brackets, and 9X thermocouples (1 each for 7X motors, and 2X for 1 motor). The motors have been modified in two ways to accommodate the needs of the flight: the nozzle cones have been removed and replaced with longer nozzles to minimize plume expansion and interference with top deck equipment, and an adapter has been designed and tested to allow for NASA Standard Initiator (NSI) firing of the motors. The ejection seat motors are commonly fired by a percussive device. The motors are arranged on the top deck of the vehicle pointed radially out and aft. There are two motors per set, and two sets of spin up motors and two sets of spin down motors, diametrically opposed.

The alignment of the spin motors is the most critical alignment of the test vehicle. A misalignment of a spin up motor could cause the vehicle to wobble during spin up, resulting in the vehicle flying at an undesired trajectory once the main motor is fired. A small pointing error at the beginning of main motor burn could propogate into a large flight path deviation 150 km downrange. Two major factors contribute to the alignment budget of the spin motors. The first factor, for which the team has no control over, is the thrust vector uncertainty relative to the nozzle of the motor. The second factor is the mechanical tolerances of the motor and its mounting hardware on the vehicle. Control over the mounting alignment is accomplished with only piece part tolerances. No shimming or adjustment of the motor will be required at the installation level.

All alterations to the motor have been designed to be incorporated to the motors at our proposed launch site in order to avoid a reclassification of the spin motors from the Department of Transportation, which is oftern a lengthy and costly process.

G. Avionics Pallet Assembly

The avionics pallet assembly houses a majority of the flight system electronics. The Avionics Pallet Assembly is the responsibility of Wallops Flight Facility. The pallet is an aluminum plate structure that aids in cooling pallet components. A major challenge in the design thus far has been to keep pallet components below their defined allowable flight temperatures. The team has performed many iterations on pallet layouts and vehicle timeline definitions in order to reach a design that meets the predetermined AFT limits. The cooling system is entirely passive, in which a majority of the cooling occurs through radiation. Cutouts below the pallet in the support deck as well as cooling fins were two methods used to minimize pallet temperatures. The Avionics Pallet can be seen in Figure 23,,showing the pallet in the SFDT flight vehicle, a closeup of the pallet layout, as well as the backside pallet cooling fins, respectively.

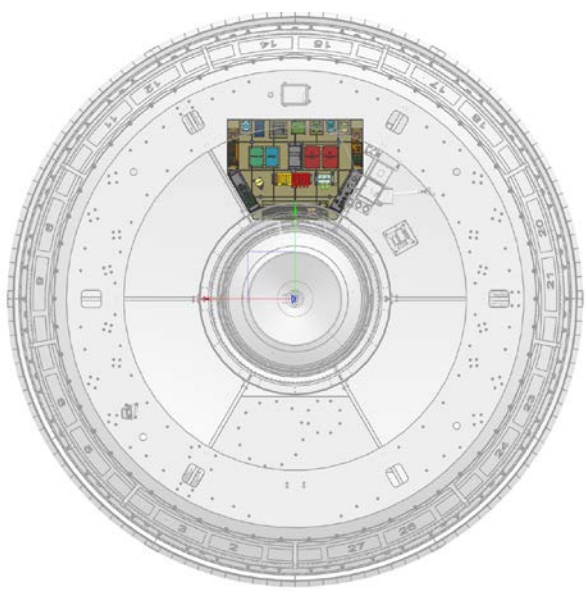

Figure 23: Avionics Pallet installed in SFDT vehicle

H. Cameras

The camera components consist of a Camera Mast Assy, a Top Deck Camera Assembly, and an Internal SIAD Camera Assembly.

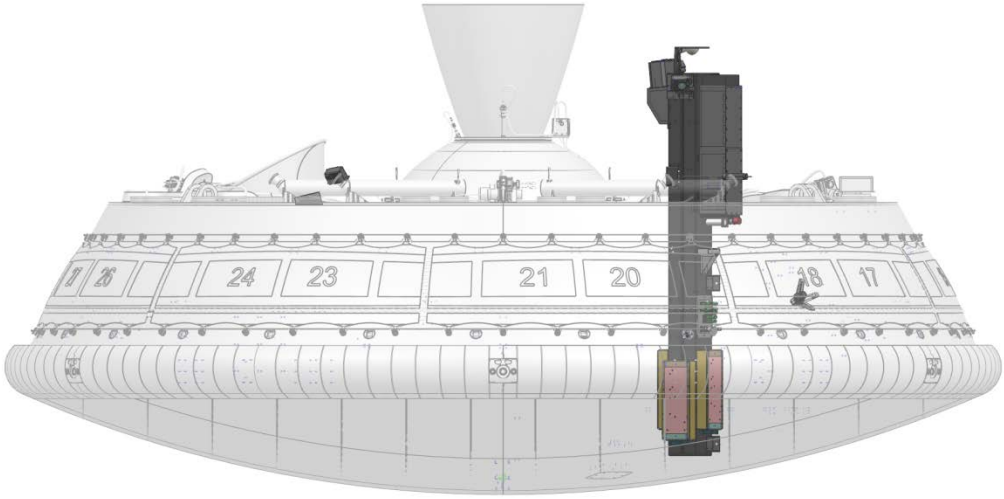

Figure 24: Camera Installation

The Camera Mast Assembly houses 2X SIAD situational awareness cameras, 1X SSRS situational awareness camera, 1X high speed panoramic SIAD camera, 1X high speed SSRS camera, 1X high resolution SSRS camera, 1X Flight Imagery Recorder (FIR), 1X data cable cutter, 3X repackaged CoreDVRs, and all the associated harnessing required to operate and record the cameras.

The SIAD situational awareness cameras are off-the-shelf GoPro HD2 cameras shooting at a resolution of 1920x1080 pixels at 30 fps. The imagery is piped down during flight in realtime via a multiplexed NTSC feed. The image quality is significantly reduced for transmission purposes, resulting in a degraded resolution of 640x480 pixels. The full HD resolution is only recorded locally to each camera via an internal solid state drive. This data is recoverable under a nominal water splashdown. In a catastrophic vehicle failure only the NTSC imagery from the situational awareness cameras is guaranteed to be recovered. The GoPros are packaged inside a metallic housing with a lens cover mechanism to protect the camera from the intense heat environment of motor burn and to also protect the lens from soot build up during motor burn. The lens is a standard piece of quartz glass with a high emmisivity titanium coating applied to its surface. Upon motor shutdown the cover mechanisms are released. The GoPro Housing Assemblies are mounted on unique fixed metallic mounts, which ensure the cameras point in specific directions. An image of the GoPro Box Housing Assembly can be seen below as well as some example images.

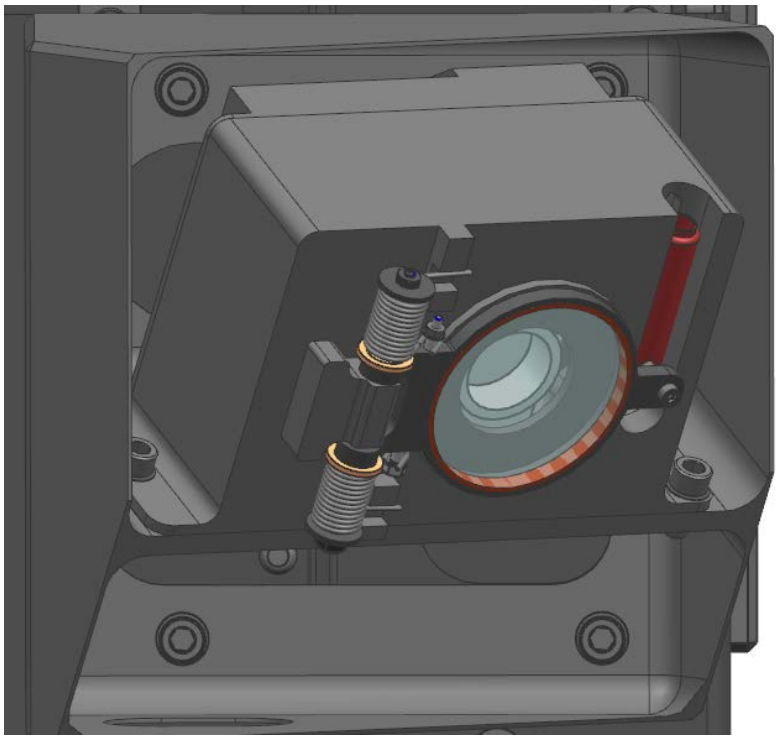

Figure 25: GoPro Box Assembly (Situational Awareness)

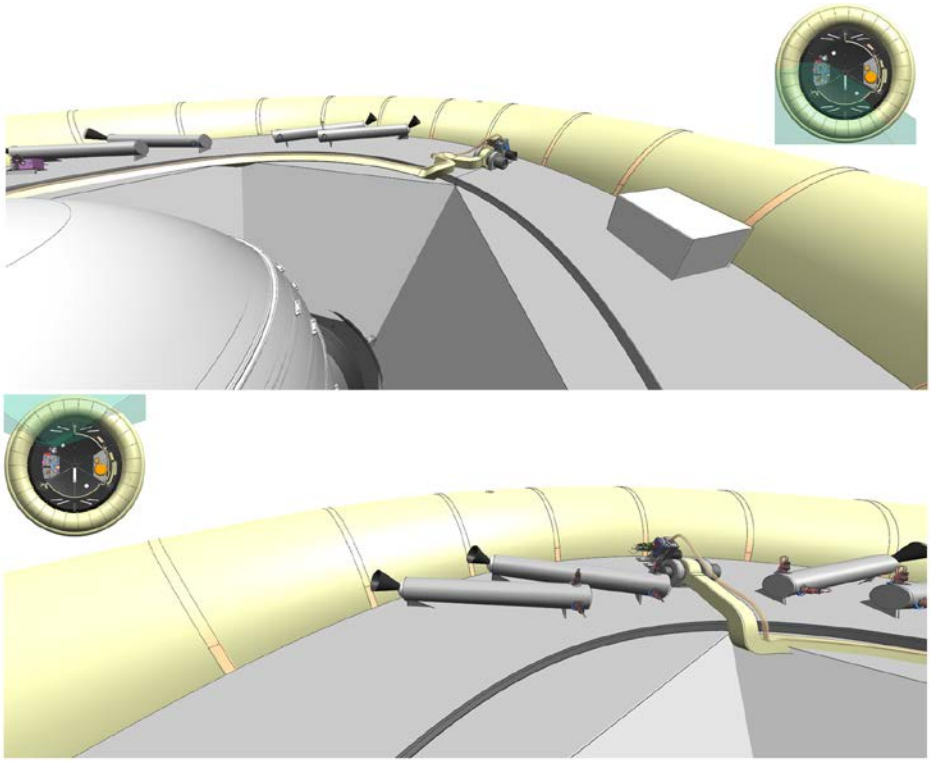

Figure 26: SIAD-R Situational Awareness, from Camera Mast Assy

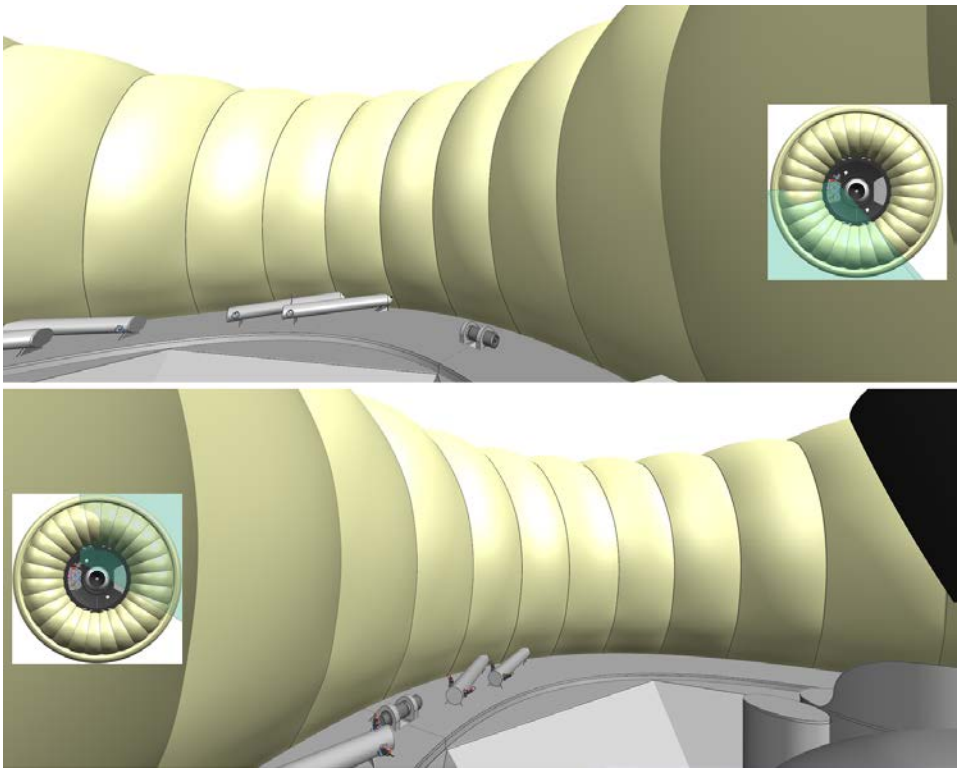

Figure 27: SIAD-E Situational Awareness, from Camera Mast Assy

The deployment mechanism is utilized for every camera on the vehicle other than the panoramic camera and SIAD internal camera. The lens cover mechanism is primarily based on MSL Hazard Camera lens covers.

The Panoramic Camera Assembly uses a mirror in order to allow for 360 degree imaging. The panoramic camera assembly houses a Baumer 4 MP camera head with a Schneider Apo-Xenoplan 2.8/50 ruggedized lens. The camera looks directly aft into the glass parabolic mirror which allows for panoramic viewing of almost the entire SIAD during deployment. The main blockage is produced by the Star48 and the camera mast itself when trying to view nearside imagery. The panoramic camera assembly must also have a different lens cover and deployment mechanism than any other camera in the vehicle. Essentially the lens cover is a cylindrical quartz tube, secured by a pyro cutter device. Upon firing springs force the lens to its open position, where it is retained via a magnetic latch. The panoramic camera assembly can be seen in Figure 28.

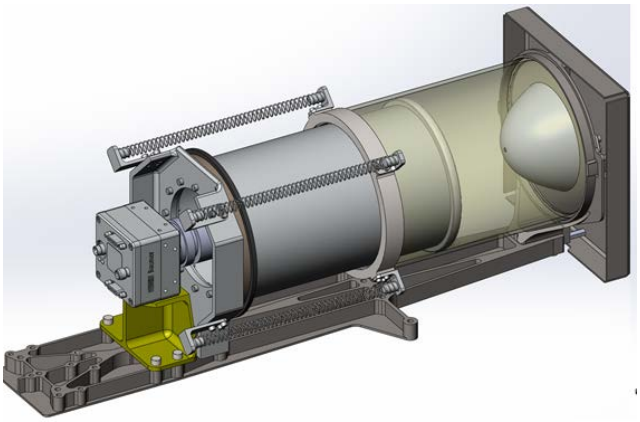

Figure 28: Panoramic Camera Assembly

The panoramic image can be manipulated to be a flat continuous image. The two images below show the raw image as well as the reformatted panoramic image. Each frame of the 150 frame per second camera can be manipulated such that a 360 deg, 150 fps video can be viewed of the SIAD deployment. There are two physical mounts on the assembly such that the field of view (FOV) can be optimized for the SIAD-R and SIAD-E.

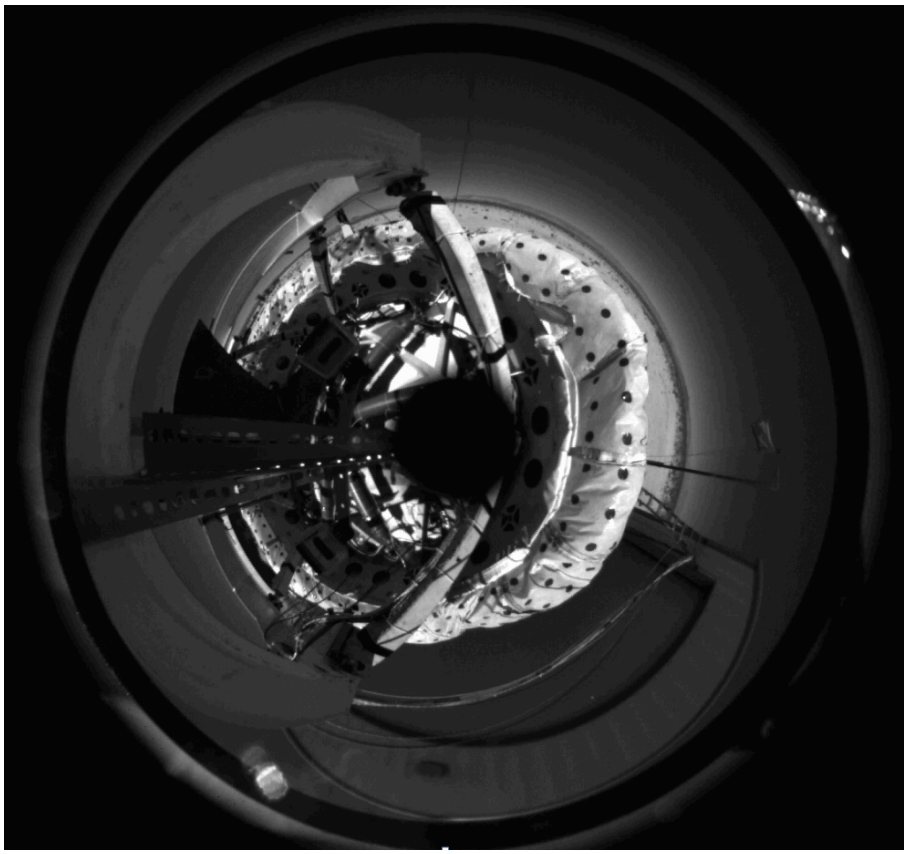

Figure 29: Panoramic Camera Image (raw)

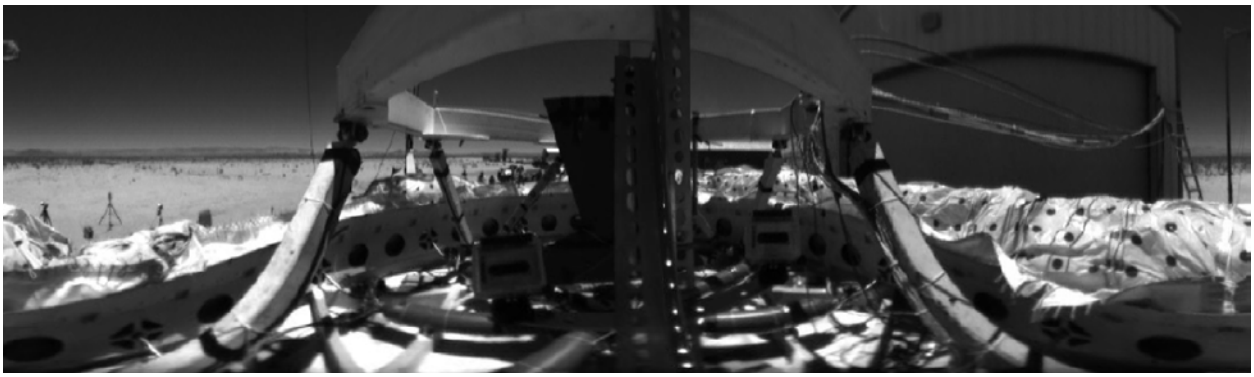

Figure 30: Panoramic Camera Image (post-processed)

The SSRS Camera Assembly is mounted on the Camera Mast. It houses a high speed (150 fps) Baumer HXC40 4MP camera with a Kowa LM12XC lens as well as a high resolution Baumer SXC80 8 MP camera with a Xenoplan 2.0/20 lens, as well as a GoPro Housing Assembly. The project is taking on risk by using the Kowa lens, as it is not qualified for our flight loads; however, the Xenoplan lens is qualified for our flight loads. Also mounted on the SSRS Camera Assembly is a situational awareness GoPro Camera Assembly. The cameras are pointed such that their nominal pointing vector is parallel with the vehicle bias due to mass properties. This bias vector has been

determined by using the vehicle CG offset and the parachute confluence fitting location. This parameter is at high risk of requiring changes down the road due to changing inputs. The camera attitude is considered fixed for the first flight, but it is plausible for this attitude to be changed for flights 2-4.

All Baumer cameras require a CoreDVR to record their data. 3X CoreDVR units are mounted to the base of the camera mast as shown below. As packaged by the vendor, the CoreDVR's are intended to cool themselves through convection. The CoreDVR's are repackaged to ensure that they can cool by thermal conduction and radiation, thereby allowing them to operate in a vacuum environment.

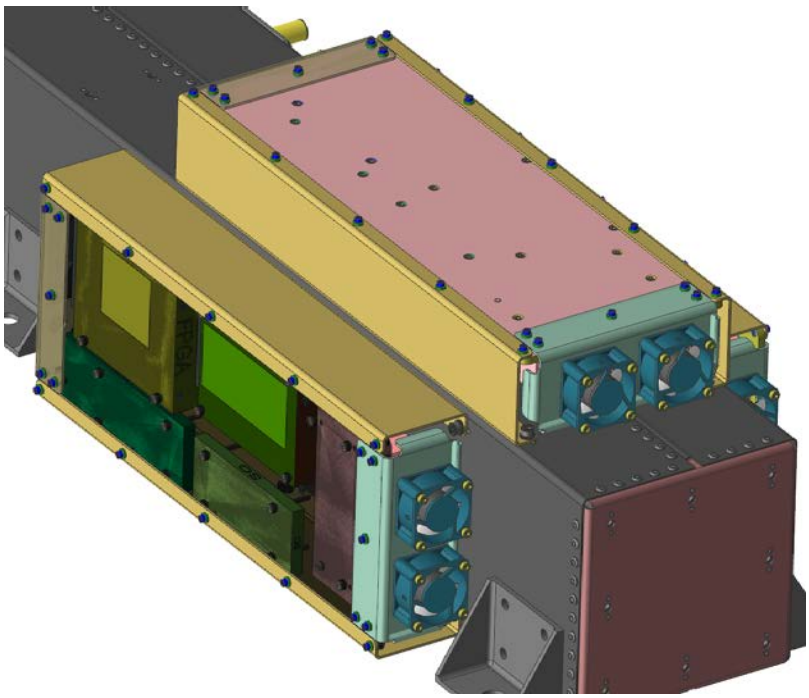

Figure 31: Repackaged CoreDVRs in Camera Mast Assembly

All high speed and high resolution imagery must be protected against a catastrophic failure of the test articles that could yield a tumbling vehicle impacting the water at 55 m/s. The team has designed a Flight Imagery Recorder (FIR) that houses all 12X solid state drives, ; it is currently envisioned that only 10X of these solid state drives are needed, but the additional two solid state drives are added to reserve additional capability. The box is designed to withstand a high energy impact while cushioning the shock environement from the drives. After impact the FIR is designed to be buoyant in a specific orientation such that a ruggedized GPS locator device developed by the Army's Aberdeen Research Laboratory can be utilized to locate the FIR. The device is effectively a ruggedized Iridium GPS locator. The FIR also utilizes an ELP-362D acousitic pinger, which is commonly used on commercial black flight data recorders ("black boxes") as well as a NSROC dye marker.

The FIR is designed to separate from the camera mast if submerged in seawater. This is achieved using Conax Universal Water Activated Release System (UWARS) which are commonly used to guarantee Navy pilot's release from a parachute upon entering the water. One of the two UWARS devices must actuate, at which point 4 springs work to ensure positive separation of the cup/cone interface.

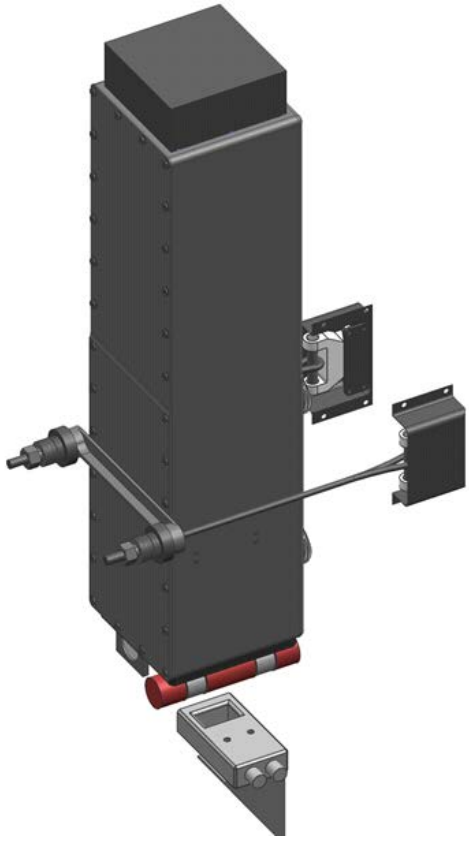

Figure 32: FIR Retention and Release System

Finally, there are two additional cameras on the vehicle that do not reside on the camera mast: Top Deck Situational Awareness and Internal SIAD Camera. The Top Deck Situational Awareness Camera Assembly sits behind a spin motor and is aimed to capture as much of the parachute extraction and bridle stand up as possible in one camera FOV. An image of its coverage can be seen in Figure 33.

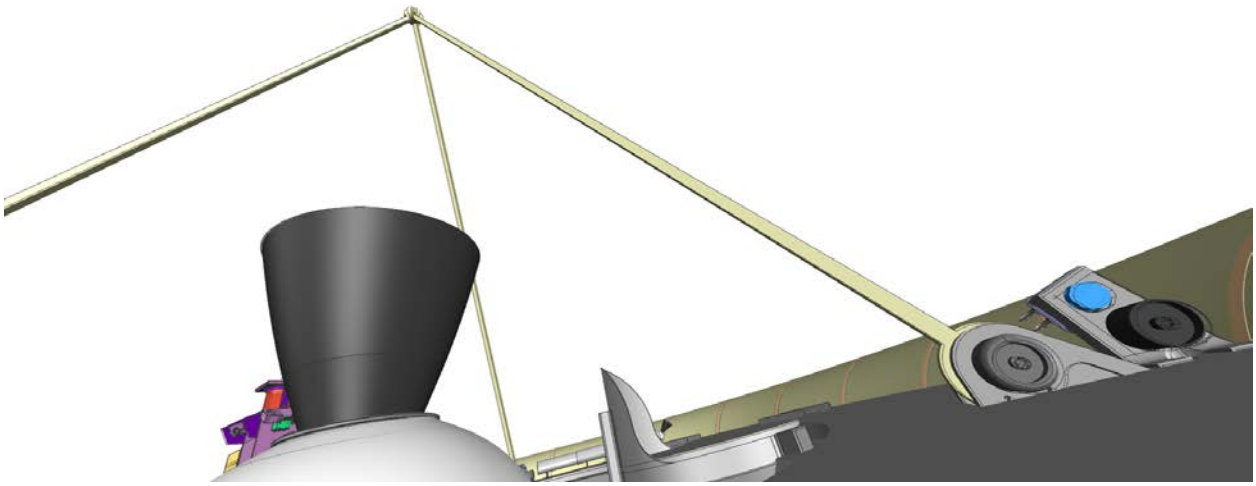

Figure 33: Top Deck Camera Assembly View

I. Guidance, Navigation, and Control Installation

The GN&C installation consists of a GLN-MAC inertial measurement unit (IMU), a magnetometer, a static inclinometer, and 2X g-switches.

The GLN-MAC provides flight dynamics data for triggering and reconstruction purposes. The GLN-MAC is NSROC hardware and it is commonly used on their sounding rocket missions.

The magnetometer is currently a third source of vehicle azimuth pointing prior to release from the balloon as well as an initialization source for the GLN-MAC. It is nominally aligned parallel with the horizon when the vehicle is hanging at the median hang angle.

The g-switches are used as a main motor inhibit removal source for the Star48 firing. The vehicle must reach a minimum angular rate before the inhibit is removed. The angular rate corresponds to a minimum angular momentum that is required to prevent the vehicle from being dynamically unstable in flight and flying off in an undetermined direction. There are two, diametrically opposed sets of two g-switches (4 total) on the vehicle. Atleast one g-switch from each set must register closed simultaneously with the opposing g-switches for a specified amount of time prior to the main motor inhibit removal. By requiring one g-switch from each set to be closed simultaneously, the false positive case due to a lateral acceleration is avoided. By having two switches per set, a single point failure is removed. The g-switch packaging is shown in Figure 34. The sensors are mechanically located to ensure alignment with VMCS. The design is non-symmetric so that it cannot physically be installed into the vehicle in the wrong orientation. The arrow is a visual indicator to verify the g-switch orientation against. However, the g-switches can also only be installed in the correct orientation based on geometry contraints. The design is meant to be "fool proof".

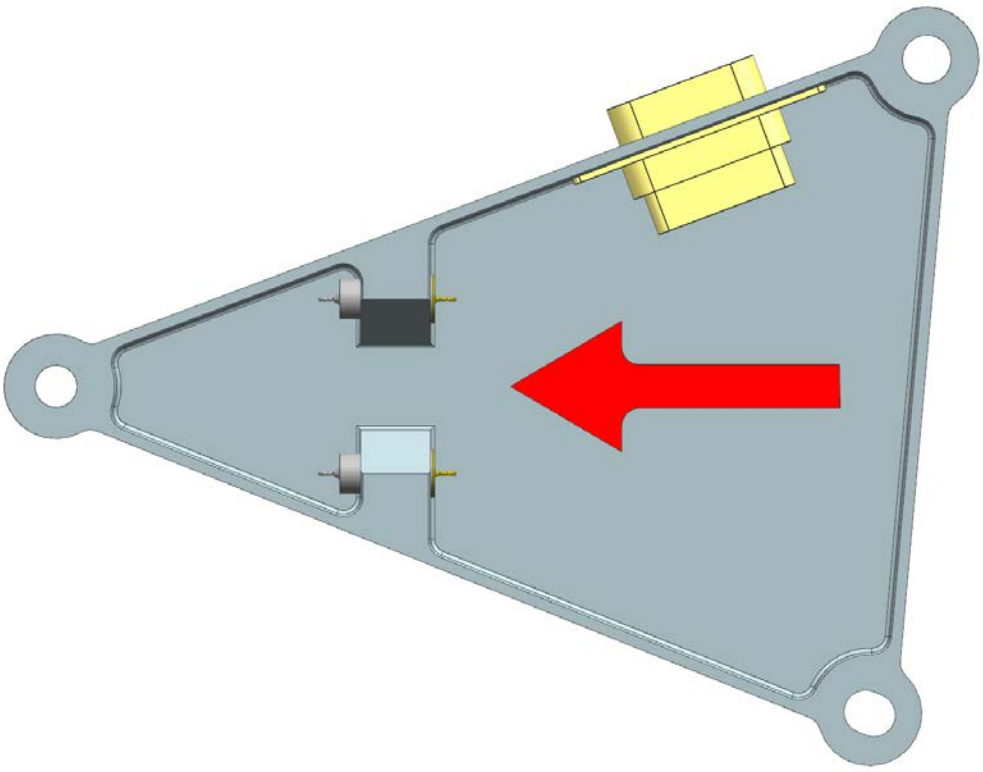

Figure 34: G-switch Assembly

The inclinometer is ground support equipment only. It is used to set the initial hang angle of the vehicle. It is mounted adjacent to the GLN-MAC in the vehicle.

J. Harnessing/ Telecomm

The vehicle harnessing refers to all power, data, pyro, and signal cables throughout the entire vehicle. The harness was approached differently than typical for JPL; a harness mock-up was not used. The general phyilospohy embarked on was to use CAD for nominal cable lengths and then to use a margin policy established for this task to determined margined cable lengths for build. The margin policy relies on the overall length of the nominal cable, the quantity of bends in the cable route, and the maximum cable outer diameter. The harnessing job on this vehicle was

greatly underestimated early on in the project. The requirements for harness run lengths and component interconnectivity are very complicated and coupled. Harnessing has and continues to play a large role in balance mass distribution. The complexity of the vehicle harnessing can be seen in Figure 35.

The harness eminates from the Avionics Pallet and generally speads out into the vehicle around the perimeter. There are three major "highways" for harnessing in the Z direction: Heatshield region harnessing, SIAD region harnessing, and Top Deck region harnessing.

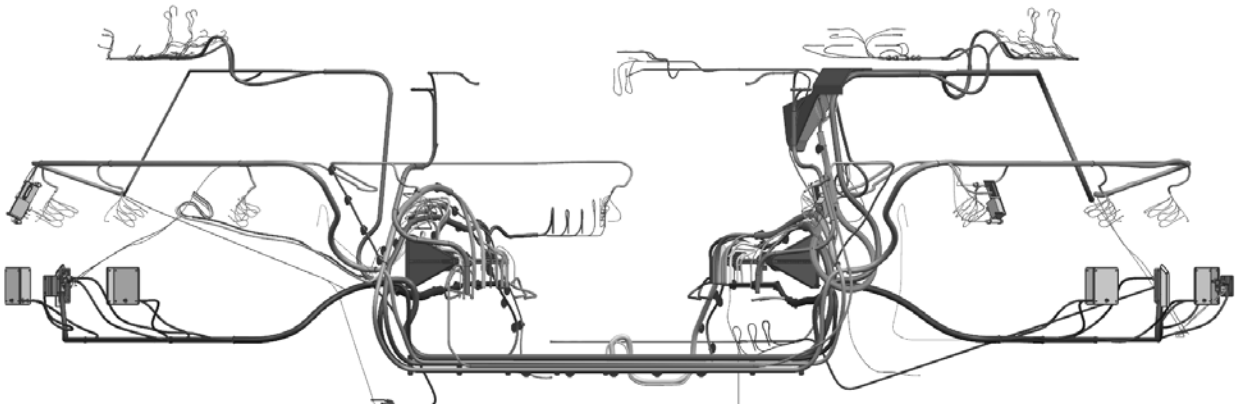

Figure 35: SFDT Vehicle Harnessing (side view)

The Telecomm Installation resides in the shoulder region of the vehicle. The line lengths and matching of line lengths is very important for the telecomm system. The telecomm system makes up most of the heatshield harnessing runs. The Telecomm installation consists of 2X GPS antennas, 2X C-Band antennas, S-Band TM antennas, S-Band Video antennas, 2X UHF antennas for the release system, and 2X low noise amplifiers (LNA).

K. Water Recovery Aids

The location of the vehicle under descent should be well known due to the onboard GPS systems mentioned above in the telecomm installtion. However, in order to ensure that the recovery team can locate the vehicle once it enters the ocean, two sets of water recovery aids have been designed into the vehicle. There is a heatshield assembly and backshell assembly. It has been decided to have two assemblies in order to always produce a location signal regardless of if the vehicle is heatshield down or flipped over in the water. Each assembly contains two different location devices; an Argos location beacon and an Iridium location beacon. These components are off the shelf and are packaged together with an altitude switch by Wallops Flight Facility. The altitude switch allows the beacons to be only turned on once the vehicle has completed its primary mission and is under descent. This avoids any potential interference to the telecomm system. Finally, there are two NSROC water dye markers in the shoulder region of the vehicle for visual identification of the vehicle in the water. This is a similar system used by Navy pilots.

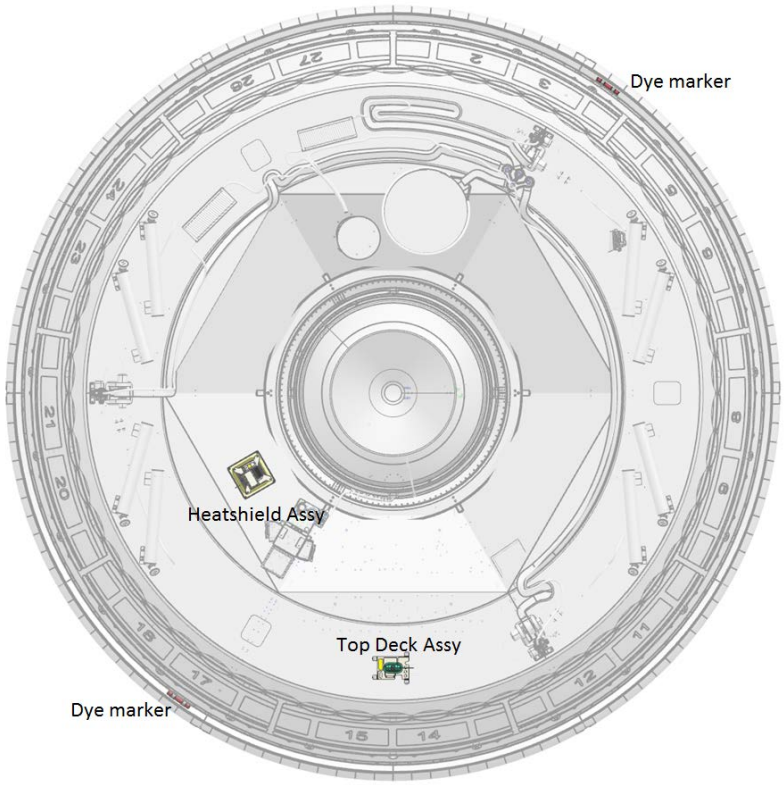

Figure 36: SFDT Vehicle Water Recovery Aids

L. Balance and Ballast Mass

In order to fly in a predictable manner the vehicle must have its cg aligned with the thrust vector of the rocket motor as well as drive its cross products about the centerline of the vehicle to near zero. In order to accommodate both of these needs the vehicle presents two balance planes. There is a total of 56 balance mass locations on the vehicle (24 top deck locations and 32 shoulder locations), for a total balance mass capability of 280 kg. The two planes are shown Figure 37 along with the ballast mass.

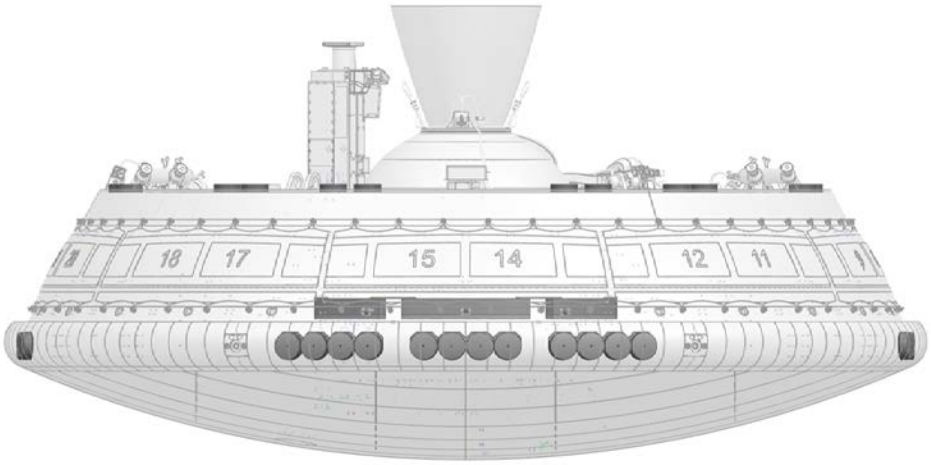

Figure 37: Balance and Ballast Mass

Due to challenges with standing up the parachute bridle legs, it has been determined that the vehicle must maintain a minimum mass of 1300 kg at parachute deploy. In order to assure this the vehicle must always be

ballasted up to 3160 kg. Mass property analysis has shown that there are cases where all components end up coming in light with respect to their current best estimates and the vehicle requires as much as 200 additional kg of ballast. In order to avoid relying on the balance mass locations to double as ballast mass, which has the negative impact of increasing rotational axis inertias, the vehicle has designed in a 200 kg ballast mass capability on the main motor adapter. This is as close as the team can get to the cg of the vehicle, thus having the least potential impact to the vehicle inertias.

M. Heatshield TPS

The heatshield experiences aerodynamic heating during flight. The magnitude of this heating has been predicted by Ames Research Center and is approximately 1.5 W/cm^2. Since the vehicle does not reach hypersonic speeds the heating is fairly benign. However, a bare carbon fiber structure could not handle this magnitude of heat flux. In order to provide thermal insulation to limit the vehicle interface to less than 50 deg C, off-the-shelf 0.25" cork insulation has been chosen. Cork is a very inexpensive, light-weight insulation that has been used before on entry vehicles. The insulation will be bonded to the vehicle heatshield in a tile layup. The gaps between tiles will be filled with high temperature RTV. Due to the large diameter of the heatshield curvature a majority of the heatshield can be covered in large tiles. The shoulder regions, on the other hand, require smaller tiles due to the dual curvature and small radius experienced in the region. An image of the heatshield TPS insulation can be seen below.

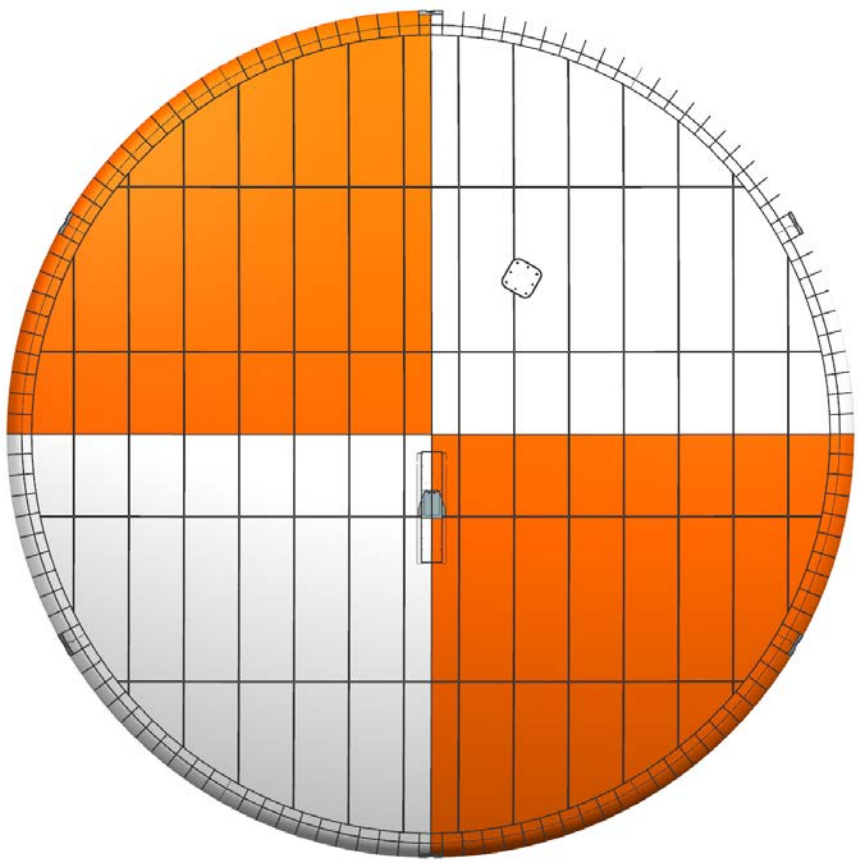

Figure 38: SFDT Vehicle Heatshield

N. Backshell TPS

During motor firing the aft end of the vehicle experiences a large heat flux due to both thermal radiation and convection. Marshall Space Flight Center was tasked to perform base heating analysis for the SFDT vehicle. The results have been used to size an in-house designed and constructed blanket system. Since the aerodynamic forces on the back of the vehicle will be negligible during flight, a non-rigid blanket system has been determined to be the lightest solution. Due to view factors, the top deck region sees the largest heat flux and the conical region sees a

reduced heat flux. The design thus uses thicker ½" blankets on the top deck region with thinner Nextel fabric only regions spanning between CSA ribs. The thicker blankets are a constructed three layer blanket system with an outer Nextel fabric layer, an inner q-fiber felt, and a third Nextel layer to complete the blanket. An image of the backshell blankets can be see below.

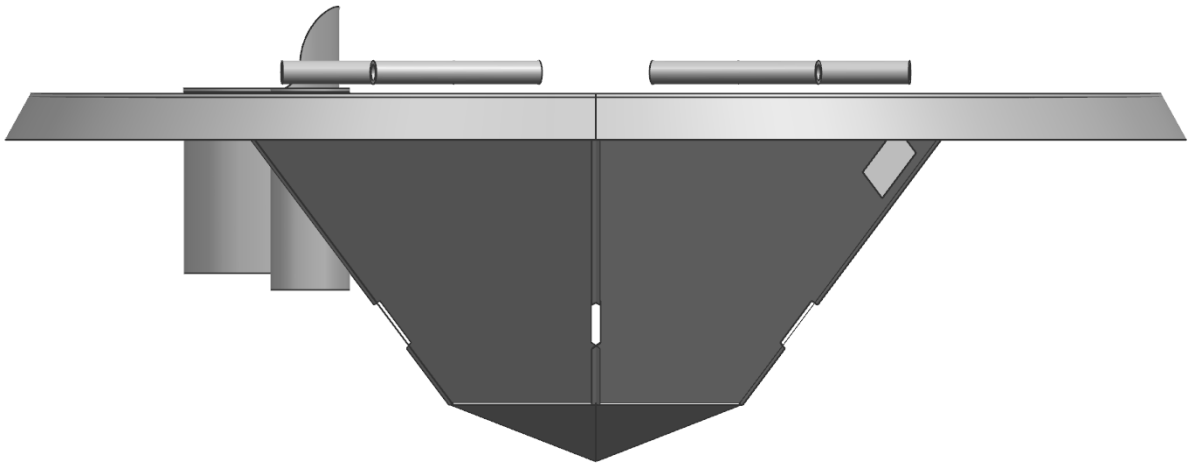

Figure 39: Backshell TPS

VI. Vehicle Capabilities for Future Testing

It is feasible that the test vehicle designed for LDSD could be used to support other decelerator technologies for high altitude testing in the future. With that goal in mind, the following will attempt to discuss easily adjustable elements of the test vehicle along with defining test article interface definitions and load limits. I will not be discussing anything that requires re-engineering. As soon as one change is made that exceeds an interface constraint, it would not be possible to accurately assess the magnitude of the impact to even the smallest change.

The test vehicle has one adjustable feature that could be used to tailor flight trajectories, and thus deployment environments, which is the balloon interface assembly. The elevation of the initial trajectory can be easily adjusted between 60 and 73 degrees. By doing this one could adjust the flight timeline, which most importantly adjusts vehicle velocity and dynamic pressure correlations. While this seems like a small tuning capability, it should be recognized that this technique along with vehicle spin rate were the only "knobs" employed by flight dynamics throughout SFDT for tuning. It must also be noted here that the avionics system functions off of altitude switches and timers. Close attention must be payed to these details when adjusting trajectories. Significant resources could easily be expended re-verifying the avionics of the vehicle if deviations are not kept to an absolute minimum.

A. SIAD Interfaces

The SIAD mechanical interface consists of 27X upper ½" strap pins, 27X lower ½" strap pins, 54X upper ¼"-28 R&R inserts, 54X lower ¼"-28 inserts, 9X 89mm gg ports (evenly spaced around the vehicle), and 3X 89mm instrumentation ports.

The CSA can withstand pin loads as high as 1300 lbs in pull out and 3000 lbs in shear, insert loads as high as 200 lb in pull out and 300 lb in shear, and a uniform pressure load of 7 psi evenly distributed in the region between the upper and lower strap pins. The gg ports contain a 3 bolt interface bolt pattern internally to support a local gg manifold with a maximum mass of 4.5 kg.

The SIAD electrical interface consists of 18 pyro circuits to be used to fire 18 Robert's Research G-2 cutters, 18 pyro circuits to fire 18 gas generators in sets of 9, Blank pressure transducers, and blank thermocouples. There is also power provided for 3 internal led lights used to measure aeroelastic distortion through imagery obtained with the internal SIAD camera.

The softgood assembly mass, including the R&R system, of a future SIAD must be less than 65 kg.

B. Parachute Interfaces

The parachute mechanical interface consists of 2X circular sets of bolt patterns, 3X 2.5" diameter load pins with JPL 5/8" release cutters, and 3X 1/2" load pins.

The larger bolt pattern can support a mass of ~150 kg. The interface can withstand a moment and shear load at the interface of 7000 ft-lbs and 1000 lbs, respectively.. The smaller bolt circle has been designed to withstand up to a 25,000 lb max compression load created by a mortar impulse. The release cutters can cut up to a ½"diameter kevlar cord. The SSRS bridle pin have a measurement load limit of 60,000 lbs each and the PDD bridle pins have a measurement load limit of 3000 lbs.

The SSRS electrical interface consists of 4X pyro circuits to be used to fire 4X Robert's research G-4 cutters, 2X pyro circuits to fire redundant mortar NSIs, and 2X thermocouples.

The maximum parachute system mass shall not exceed 250 kg.

VII. Conclusion

The path from concept to design to the beginnings of LDSD implementation has not been an easy one. At every turn the design has been challenged by mass, cost, or schedule (and continues to be). The fundamental challenge has been to concurrently configure the flight vehicle while the payloads (SIADs and SSRS) are under development. The amount of resources consumed trying to design an interface against an evolving design has exceeded expectations. It is also important to remember that the "devil is in the details." It is always easy to assume a design based on previous work or heritage, but as soon as one variable changes, significant new work is likely required.

The SFDT vehicle design and configuration have been a great challenge. In nine months from now the the plan is to have the first vehicle enter into I&T, which is a major milestone for the project. The SFDT schedule proposes that Vehicle 1 make its first flight in the summer of 2014, with Vehicles 2-4 proposed to fly in the summer of 2015.

Acknowledgments

The research was carried out at the Jet Propulsion Laboratory, California Institute of Technology, under a contract with the National Aeronautics and Space Administration. I would like to thank the entire Mechanical Team on LDSD for their continued effort towards delivering a successful test vehicle. I would like to thank LDSD for the support in accomplishing our goals. And finally, I would like to thank NASA's Office of the Chief Technologist and Caltech's Jet Propulsion Laboratory for providing us with the funds and environment that allow us to push the limits of technology.

References

[1] Lundstrom, R. R., Raper, J. L., Bendura, R. J. and Shields, E. W., "Flight Tests of Viking Parachute System in Three Mach Number Regimes I: Vehicle Description, Test Operations, and Performance," NASA Technical Note TN D-7692, Oct. 1974.

[2] Giersch, L., Rivellini, T., Clark, I., Shook, L., Ware, J., Welch, J., "SIAD-R: A Supersonic Inflatable Aerodynamic Decelerator for Robotic missions to Mars," 22nd AIAA Aerodynamic Decelerator Systems Conference, March 2013.

[3] Coatta, D., Jurewicz, D., Tutt, B., Rivellini, T., Clark, I., "Development and Testing of an 8 Meter Isotensoid Supersonic Inflatable Aerodynamic Decelerator," 22nd AIAA Aerodynamic Decelerator Systems Conference, March 2013.

[4] Gallon, J., Clark, I., Rivellini, T., Adams, D., Witkowski, A., "Low Density Supersonic Decelerator Parachute Decelerator System," 22nd AIAA Aerodynamic Decelerator Systems Conference, March 2013.

[5] Kenig, S., Gallon, J., Adams, D., Rivellini, T., "Rigging Test Bed Development for Validation of Multi-Stage Decelerator Extractions," 22nd AIAA Aerodynamic Decelerator Systems Conference, March 2013.