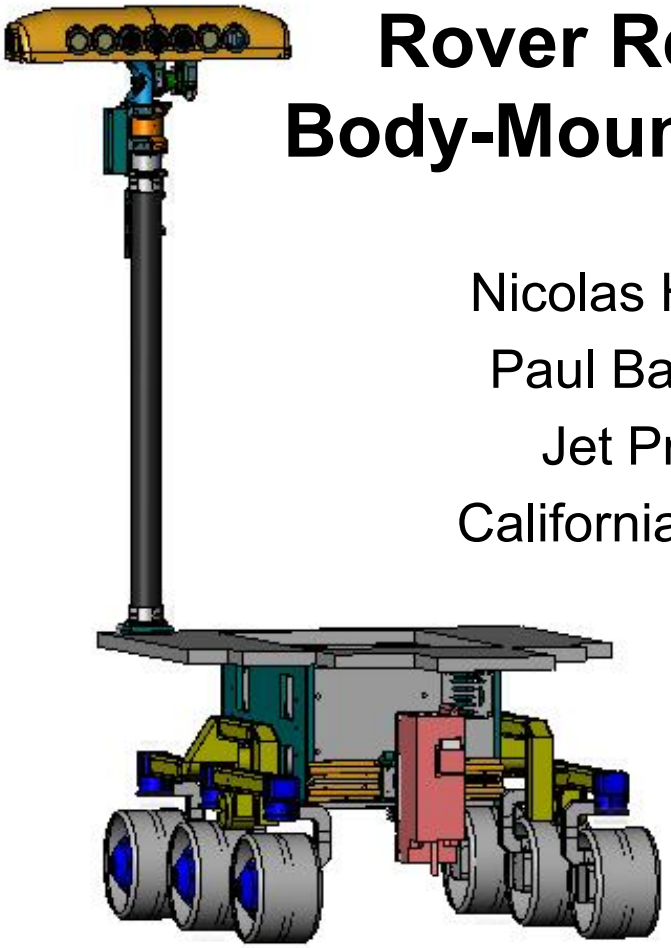

Rover Reconfiguration for Body-Mounted Coring with Slip

Nicolas Hudson, Paulo Younse,
Paul Backes, Max Bajracharya
Jet Propulsion Laboratory
California Institute of Technology

Coring on Slopes With a Low-Mass Rover

- A future mars sample return mission may require sampling on slopes of up to 30 degrees. In these circumstances it is possible the rover may experience slip.
- Slip compensation is shown for an *passive compliance* + *active reconfiguration* strategy while coring.
- Low degree of freedom tool deployment devices are used

- Previous work has considered arm mounted coring without force feedback

Body Mounted Coring

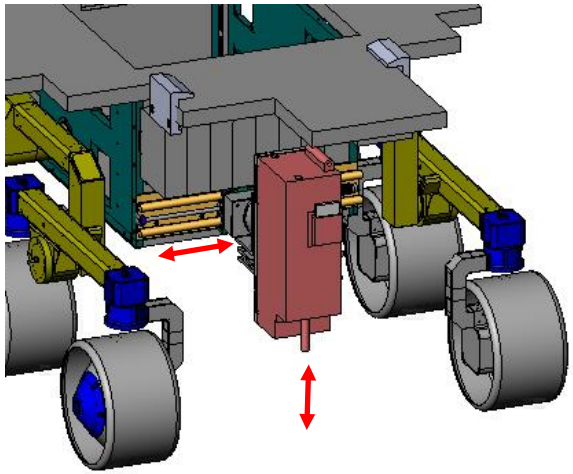

- 1 degree of freedom (DOF) deployment device
- + 1 DOF axial drill feed

- FIDO type test rover
- Honeybee Robotics MiniCorer used to collect core samples

Passive Compliance Device

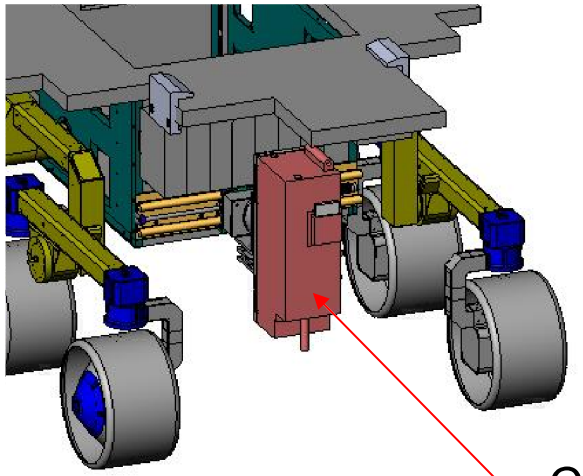

- Used to compensate for small displacement rover slip.
- Constrained to 2 DOF

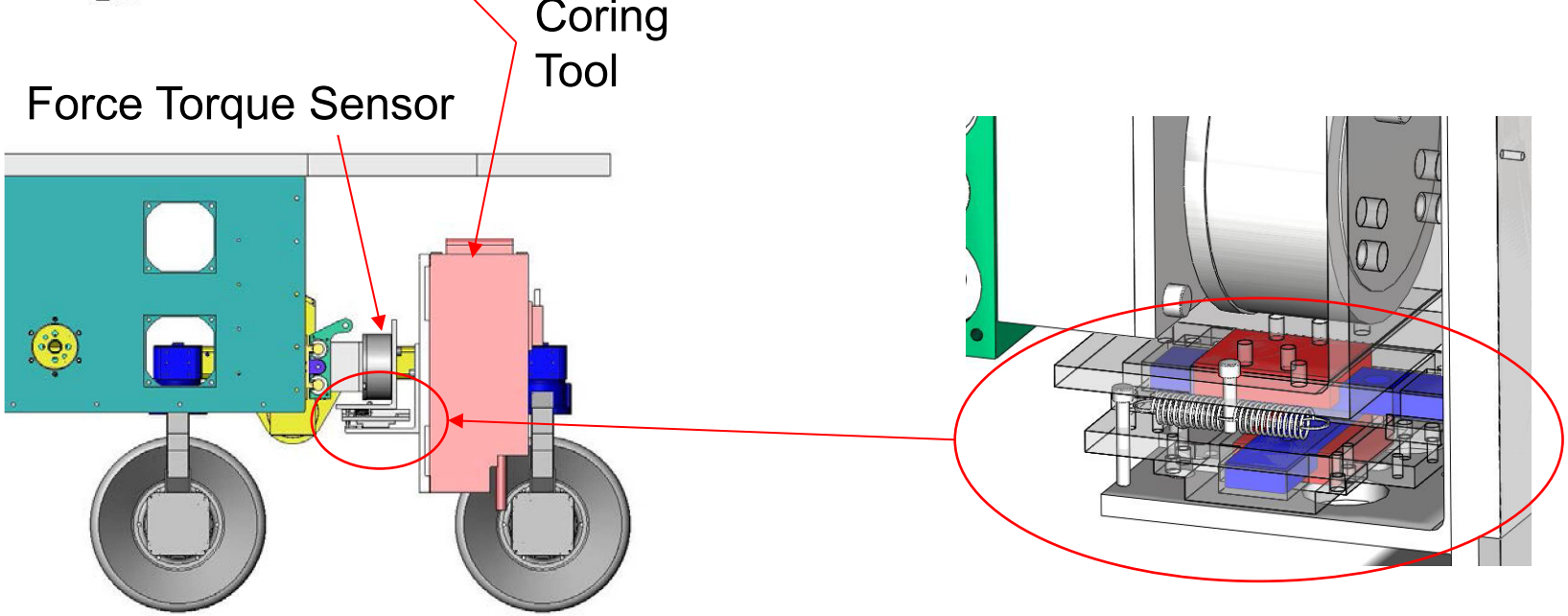

Active Reconfiguration

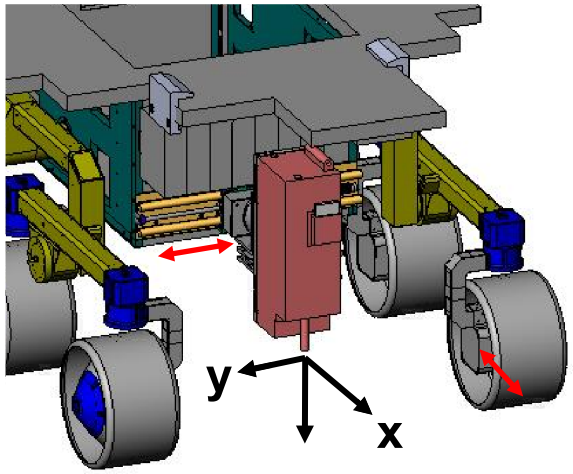

- Use force feedback to compensate for rover slip
- Commanded rover velocity is proportional to force on tool
- Low bandwidth

- Deployment device is used to move tool in y direction

$$\dot{y} = -k_y \left(f_y^{ref} - f_y \right)$$

- Mobility system (wheel motion) used to move tool in x direction

$$\dot{x} = -k_x \left(f_x^{ref} - f_x \right)$$

Test Setup

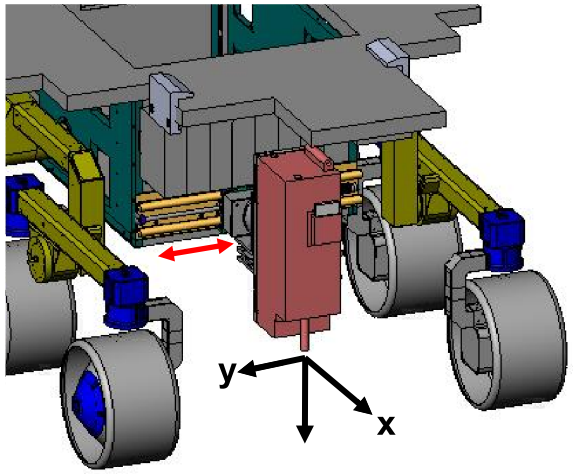

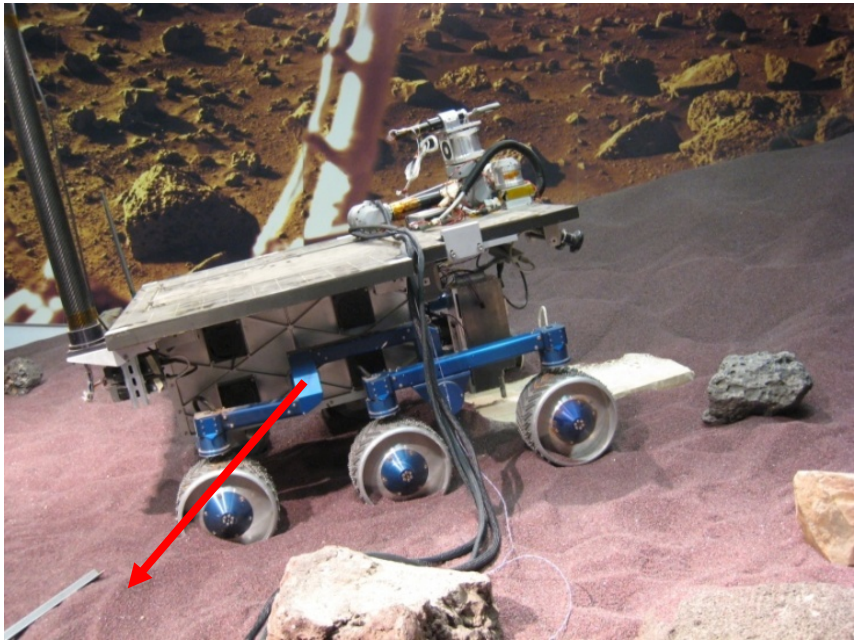

- Rover is pulled down 45° to the slope while coring
- The motion of the rover is measured using absolute motion visual odometery.
- Forces on tool are measured.

Test 1: Passive Compliance Result

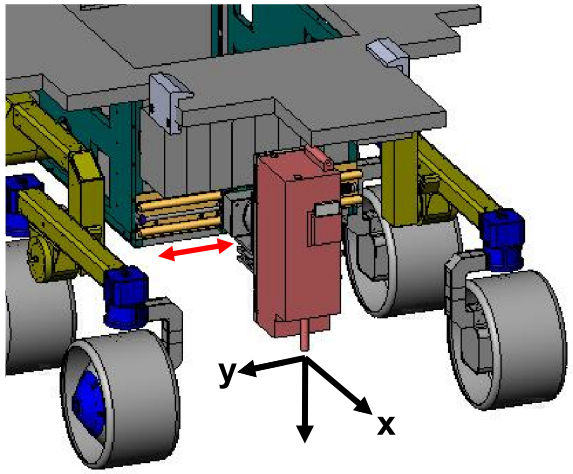

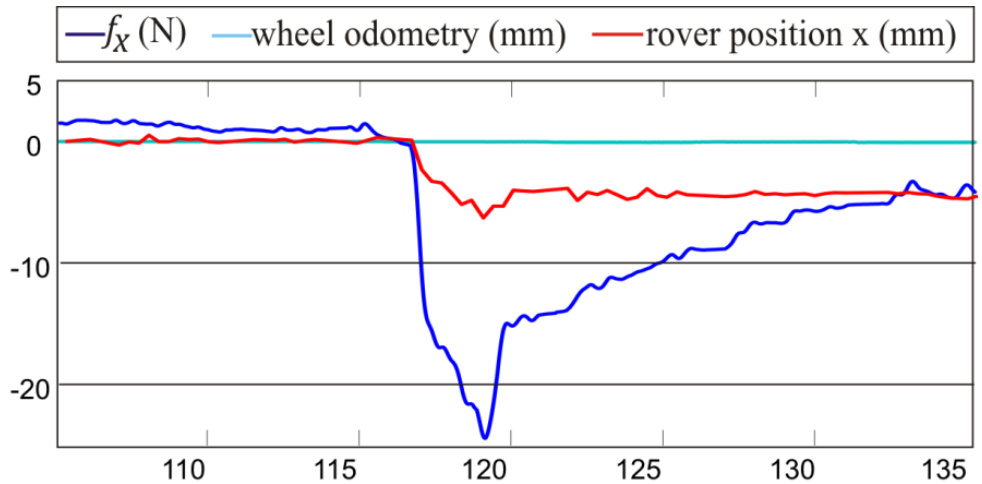

(a) X-axis

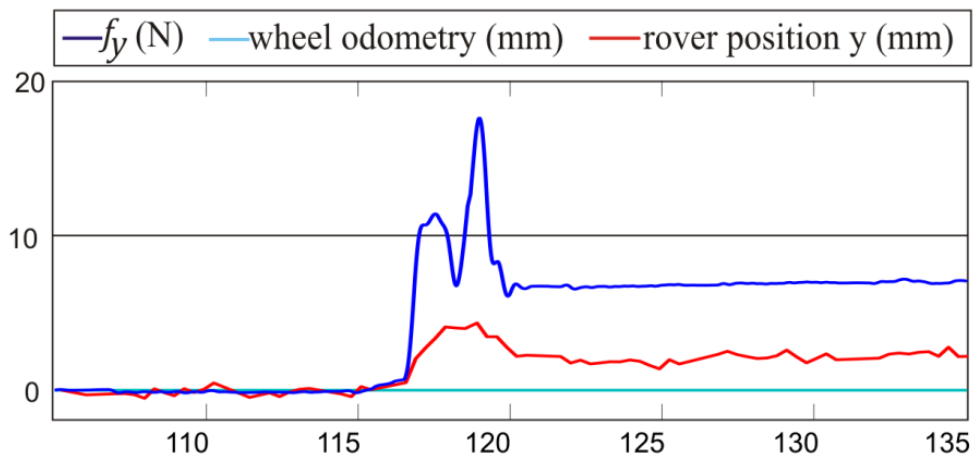

(b) Y-axis

- Residual forces on tool in x-y plane
- Can compensate for small slip <7mm

Test 2: Active Reconfiguration

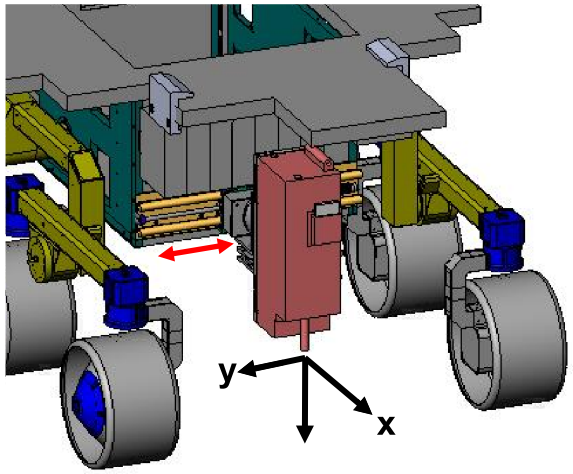

- At steady-state there is zero force on tool in x-y plane
- Can compensate for larger or sustained slips 20mm+

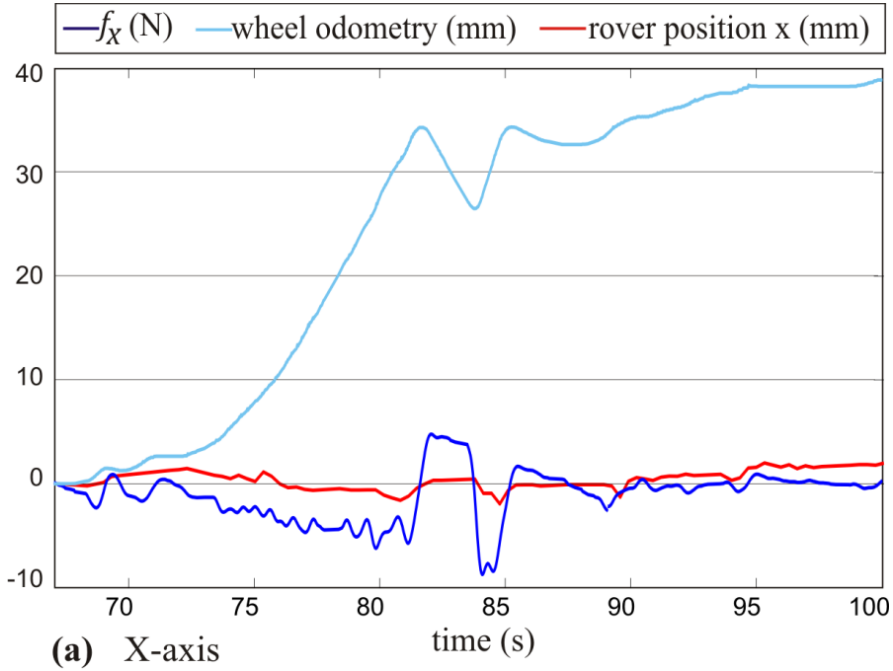

(a) X-axis

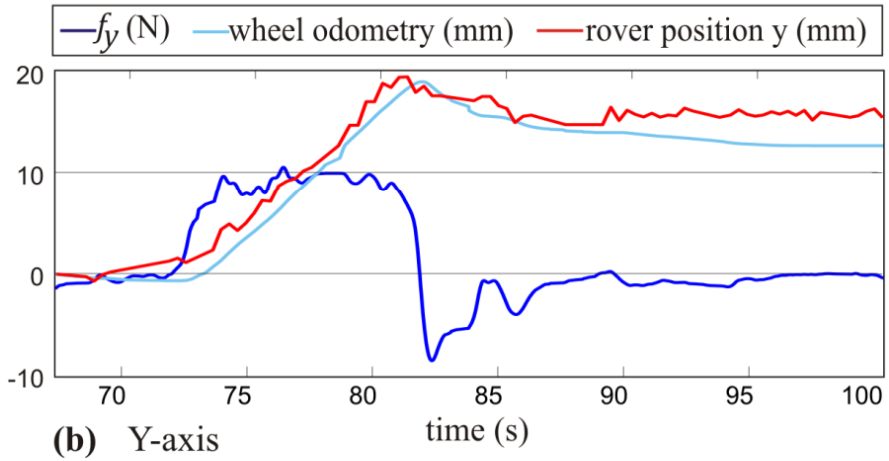

(b) Y-axis

Test Results

- Active reconfiguration + passive compliance provide a mechanism to accommodate slip
- Here this accommodation is restricted to 2 DOF.
- Active reconfiguration used wheel motion, resulting in “sinking” into sandy ground.

Out of Plane Induced Movement

- Rover was placed on slope with right wheels on limestone, and left wheels on sand.
- Wheel motion during active reconfiguration caused the rover to tilt up to 2.5 degrees

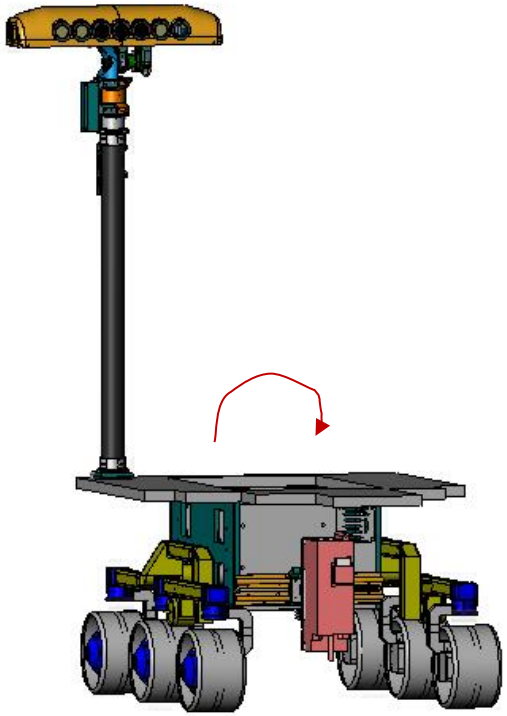

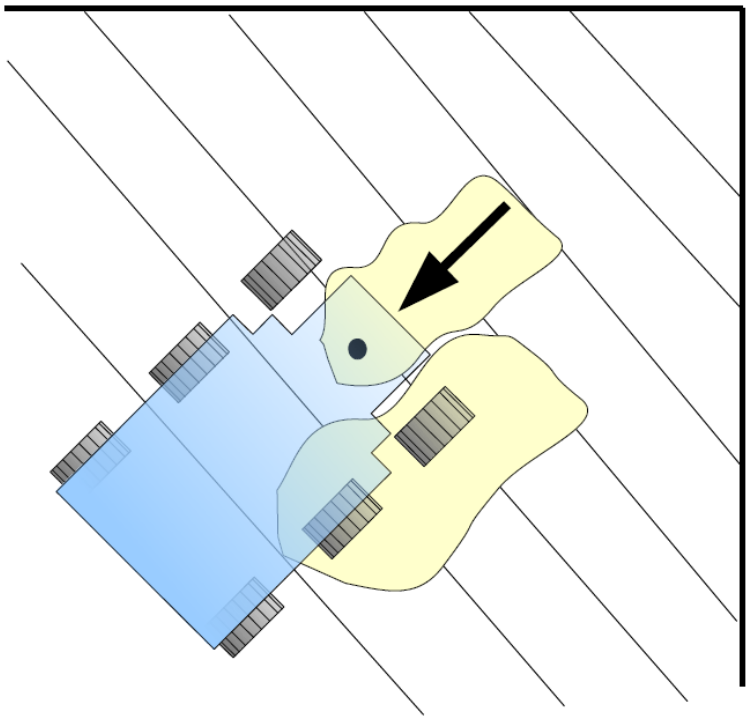

Conclusions

- Using wheel motion and 1DOF motion device, rover can continue coring during moderate slip in wheel plane.
- Rover cannot accommodate slip out of plane
- Wheel ground interaction can cause unpredictable behavior, including out of plane (tilt, pitch) motions