The Deep Impact Network Experiment Operations Center

J. Leigh Torgerson, Loren Clare,
Shin-Ywan (Cindy) Wang, and Joshua Schoolcraft

Jet Propulsion Laboratory
California Institute of Technology

Presented at
IEEE Aerospace Conference
Big Sky, Montana
11 March 2009

Overview

- Delay/Disruption Tolerant Networking (DTN) Overview
- Deep Impact NETwork (DINET) Flight Experiment
- DINET Experimental Operations Center (EOC)
- DINET Results
- Conclusions

Disruption Tolerant Networking Overview

- Existing TCP/IP Internet service model makes implicit assumptions
  - an end-to-end path exists between a data source and its peer
  - the maximum round-trip time is not excessive
  - the end-to-end packet drop probability is small
- "Challenged networks," in particular space networks, can violate one or more of these assumptions
  - "Opportunistic networks", "intermittently-connected networks", "episodic networks"
- Space networks generally
  - have paths whose links are not contemporaneous due to occultation or unavailable resources because of over-subscribed demand, e.g., Deep Space Network assets
  - have very long light-time propagation delays on links, or long delays due to scheduling of resources
  - form bidirectional communications via two unidirectional links in opposite directions having different data rates
  - can have error rates considerably higher than terrestrial links

Disruption Tolerant Networking Overview

Non-contemporaneous communications links in path

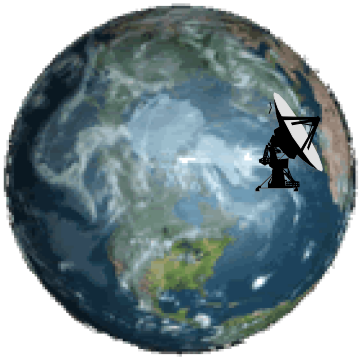

Time 1: Orbiter not in view of surface asset

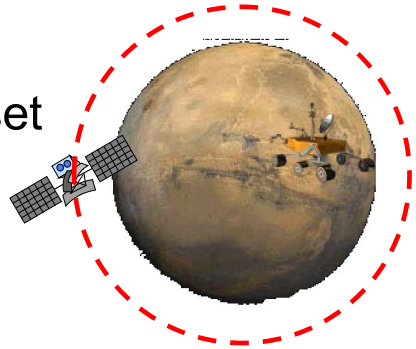

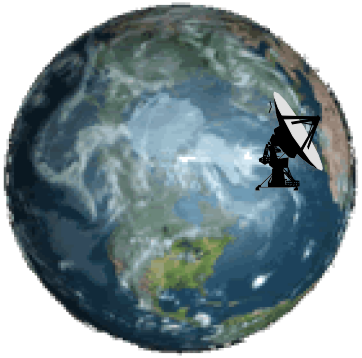

Time 2: Orbiter - surface asset pass;
orbiter receives & stores data

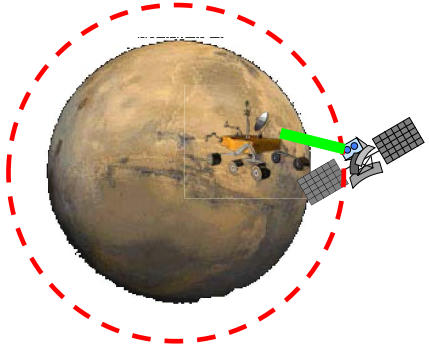

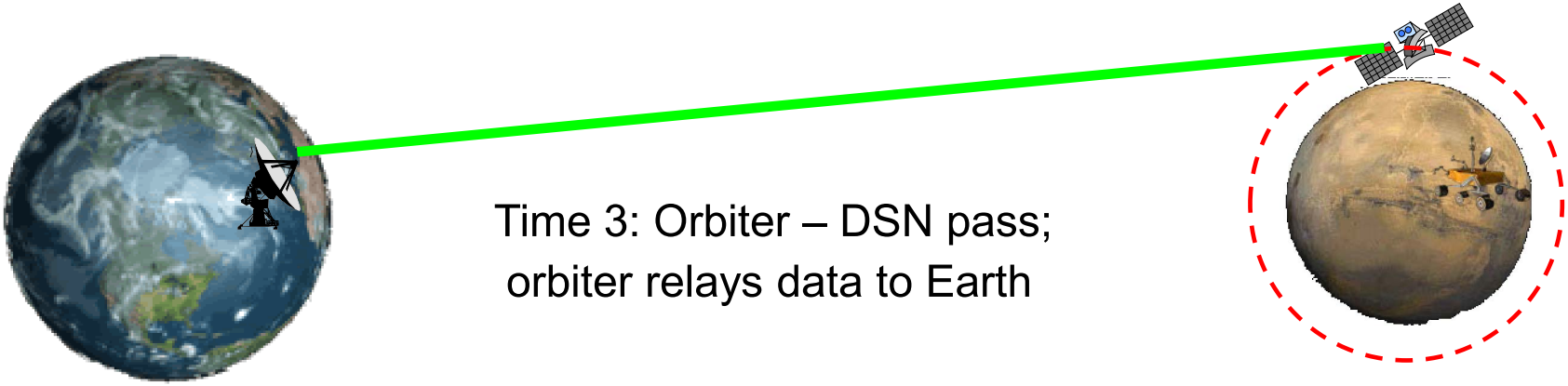

Time 3: Orbiter – DSN pass;
orbiter relays data to Earth

Disruption Tolerant Networking Overview

Over-subscribed shared resource must wait for scheduled time

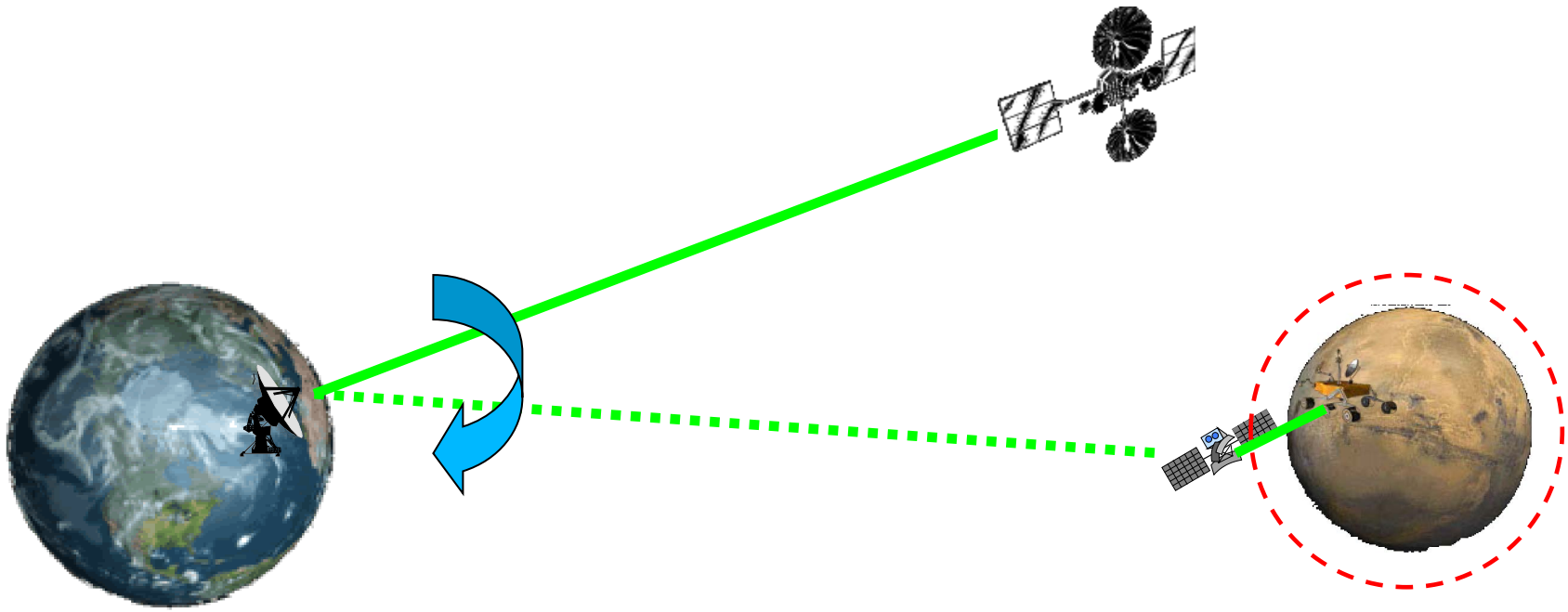

Examples of DTN Domains

- Wireless Sensor Networks; Habitat tracking networks
  - UCLA Ad Hoc sensor array 500 km (Acapulo-Mexico City-Tampico) 50-100 nodes, 5-10 km apart
  - Zebranet: custom tracking collars (nodes) carried by animals under study across a large, wild area; the collars operate as a peer-to-peer network to deliver logged data back to researchers. Physical presence of the researchers is no longer required in order to collect zebra mobility patterns. (Kenya)
  - Shared Wireless Infostation Model (SWIM) – whale tracking

- Village Networks / Rural ICT / sneakernet
  - DakNet, Wizzy Digital Courier
  - Sámi Network Connectivity Project: remote reindeer herders (Sweden)
- Mobile Ad Hoc Networks
  - Mobility causes obstructions that partition network, such as disaster recovery network
  - Military: Jamming, radio silence/EMCON; harsh environments such as MOUT (urban terrain). DARPA DTN project (e.g. Mitre CONDOR)
- Vehicle Networks (VANETs; V2V & V2I)
  - Potential application to Intelligent Transportation System (ITS)
  - UMass DieselNet a DTN consisting of WiFi nodes attached to buses; when bus encounters another, it exchanges information while in range. Makes use of periodicity in contact times.
- Pocket Switched Networks
  - Make use of user mobility and storage devices; opportunistic data delivery; Haggle: EU project on autonomic opportunistic communications; MindStream Project (U. Waterloo)
- Peer-to-peer (P2P) Networks: Node presence is variable

Space DTN networks

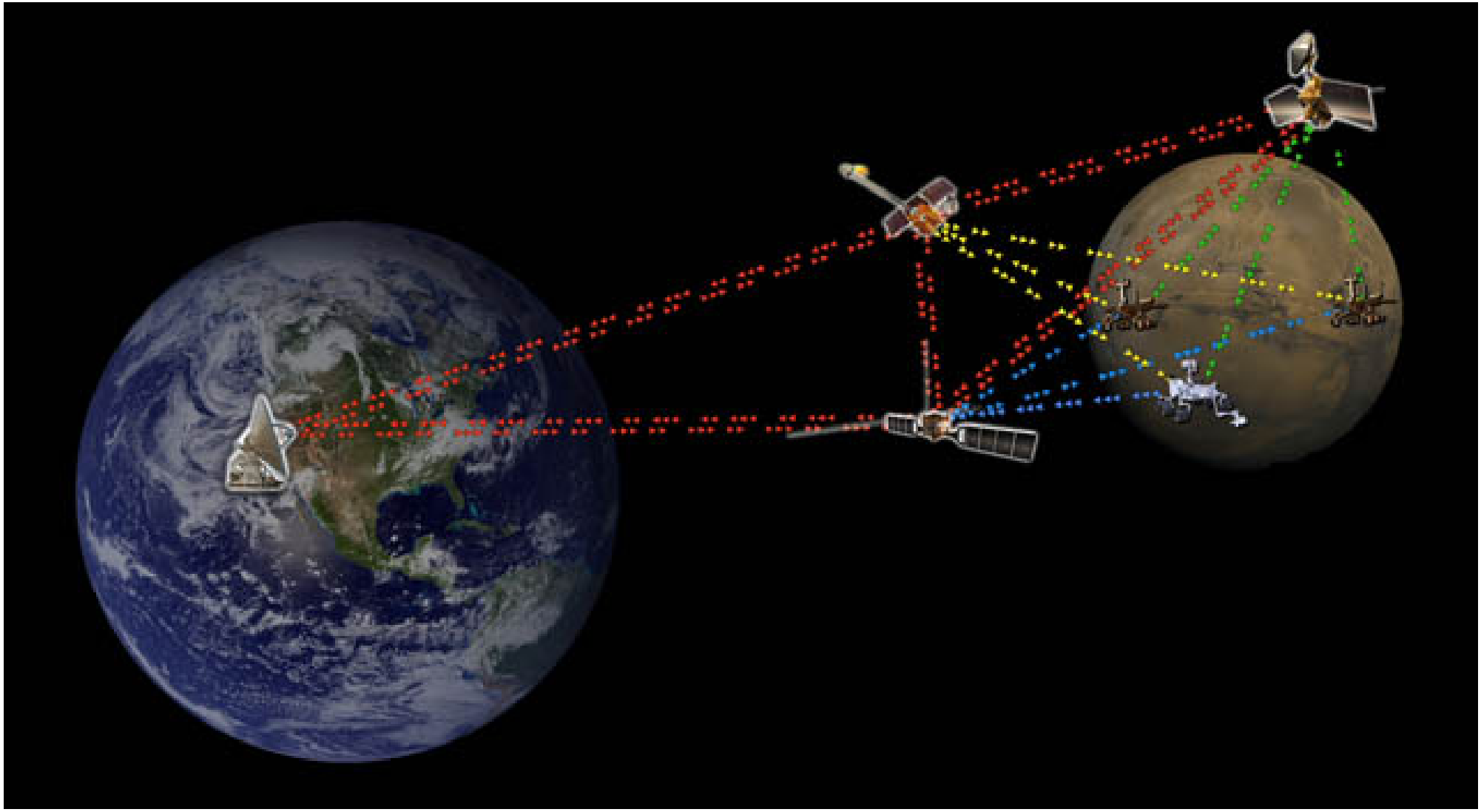

Space Networks

- Generally predictable (although dynamic) topologies
  - Orbital kinematics and planetary rotation
  - Scheduling of precious resources
- Typically, offered traffic is largely predictable
  - Highly planned mission operations
  - However, greater autonomy is being incorporated
  - Prioritization of traffic can enable efficient use of resources
- Hardware environment causes computing resources to be relatively costly
  - Limited power and mass
  - Radiation hardened processors and memory/storage
- Very high reliability and fault recoverable, implies need for high predictability
  - Use of Real Time Operating System
  - Highly restricted use of dynamic allocation of system memory

S. Burleigh, “Delay-Tolerant Networking for Space Flight Operations: Design and Development,” SpaceOps’08

ION: DTN for Space Networking

- The Bundle Protocol (BP) (RFC 5050) provides capabilities to achieve Delay/Disruption Tolerant Networking
  - Registration, bundle format, report generation, transmission/delivery including optional “custody transfer”, forwarding, deletion, and fragmentation/reassembly
- The Licklider Transmission Protocol (LTP) provides retransmission-based reliability for connections subject to disruptions and long delays
  - Protocol is stateful, with no negotiation or handshakes
- Interplanetary Overlay Network (ION) implements BP and LTP for use in space networking*

*S. Burleigh, “Delay-Tolerant Networking for Space Flight Operations: Design and Development,” SpaceOps’08

Space DTN: NASA-JPL DINET

- DINET = Deep Impact NETwork experiment
- Demonstrated DTN internetworking functionality for deep space missions with significant light-time delays and network disruptions
    - JPL "Interplanetary Overlay Network" (ION) implementation of DTN protocols
- DINET operations conducted 18 October 2008 through 13 November 2008
- Capabilities exercised:
  - Automated forwarding (custody transfer)
  - Automatic retransmission
  - Merging of prioritized flows from multiple sources
  - Dynamic routing
  - Tolerance of outages on the order of 48 hours
  - Tolerance of signal propagation delays > 80 sec OWLT

COMPUTERWORLD
Defense Aerospace
SEARCH

NASA successfully tests deep space Internet

With Vint Cerf, NASA develops communication protocol that uses spacecraft as routers

- Deep Impact (EPOXI) spacecraft acted as a DTN router
  - EPOXI was ~20 million miles away from Earth
  - Uplink data rate: 2000 bps; normal downlink data rate ~ 165000 bps
  - DINET operations were performed during the Deep Impact spacecraft team "stand down" after EPOCH operations and before the start of development for DIXI operations
- No significant anomalies in DINET flight or ground software
- All DINET Level 1 objectives were met

Space DTN: EPOXI

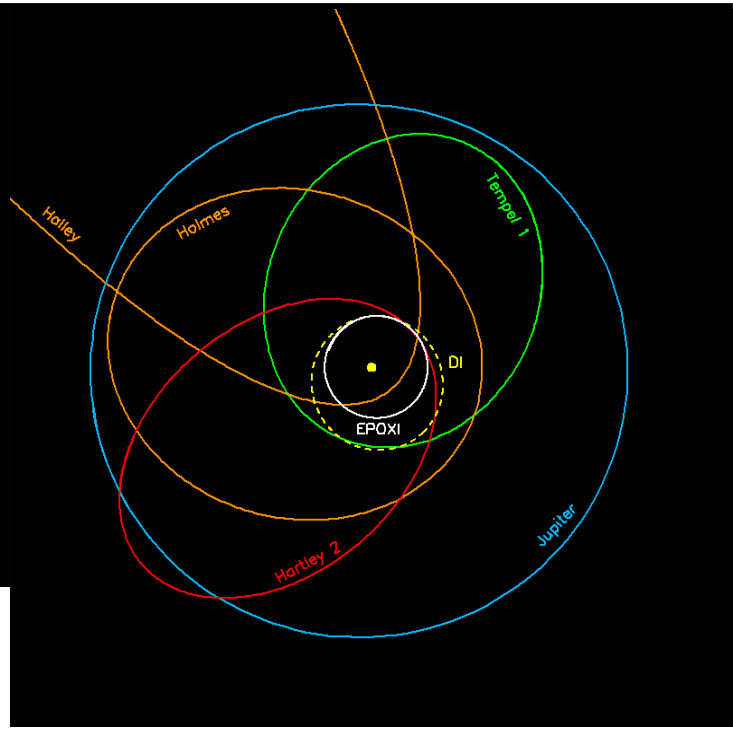

- Deep Impact mission
  - July 3, 2005 released and imaged impactor into comet Tempel 1
- Extended mission EPOXI:
  - EPOXI = EPOCh (=Extrasolar Planet Observations and Characterization) + DIXI (= Deep Impact eXtended Investigation)
  - EPOCh 1st half of 2008
  - DINET DTN experiment during cruise phase
  - DIXI observation of comet Hartley 2 planned 4 Nov 2010

Space DTN: Flight Systems - DINET

DINET topology

Virtual Earth, Mars, Phobos DTN routers and links implemented by ground systems

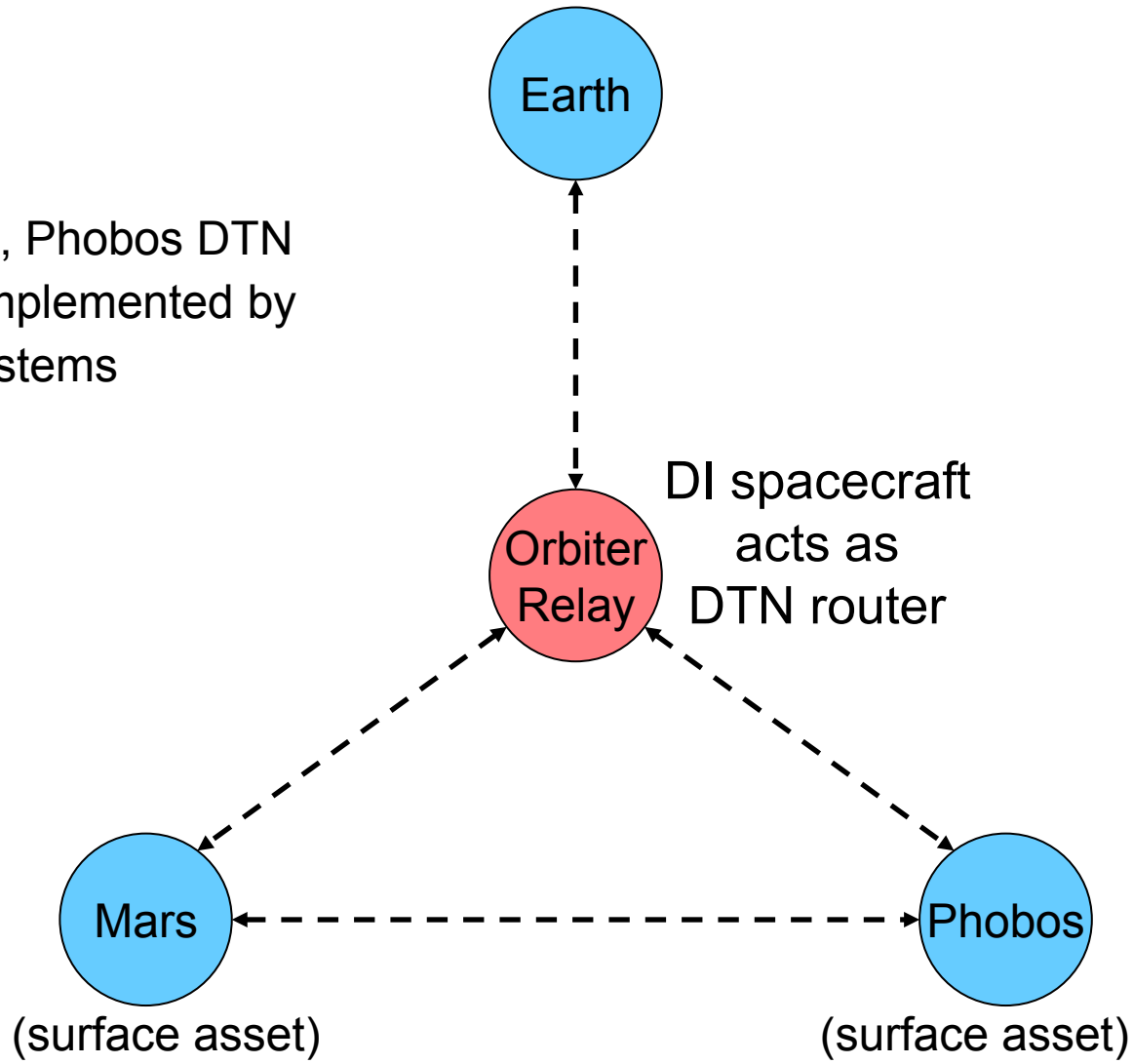

Space DTN: Flight Systems - DINET

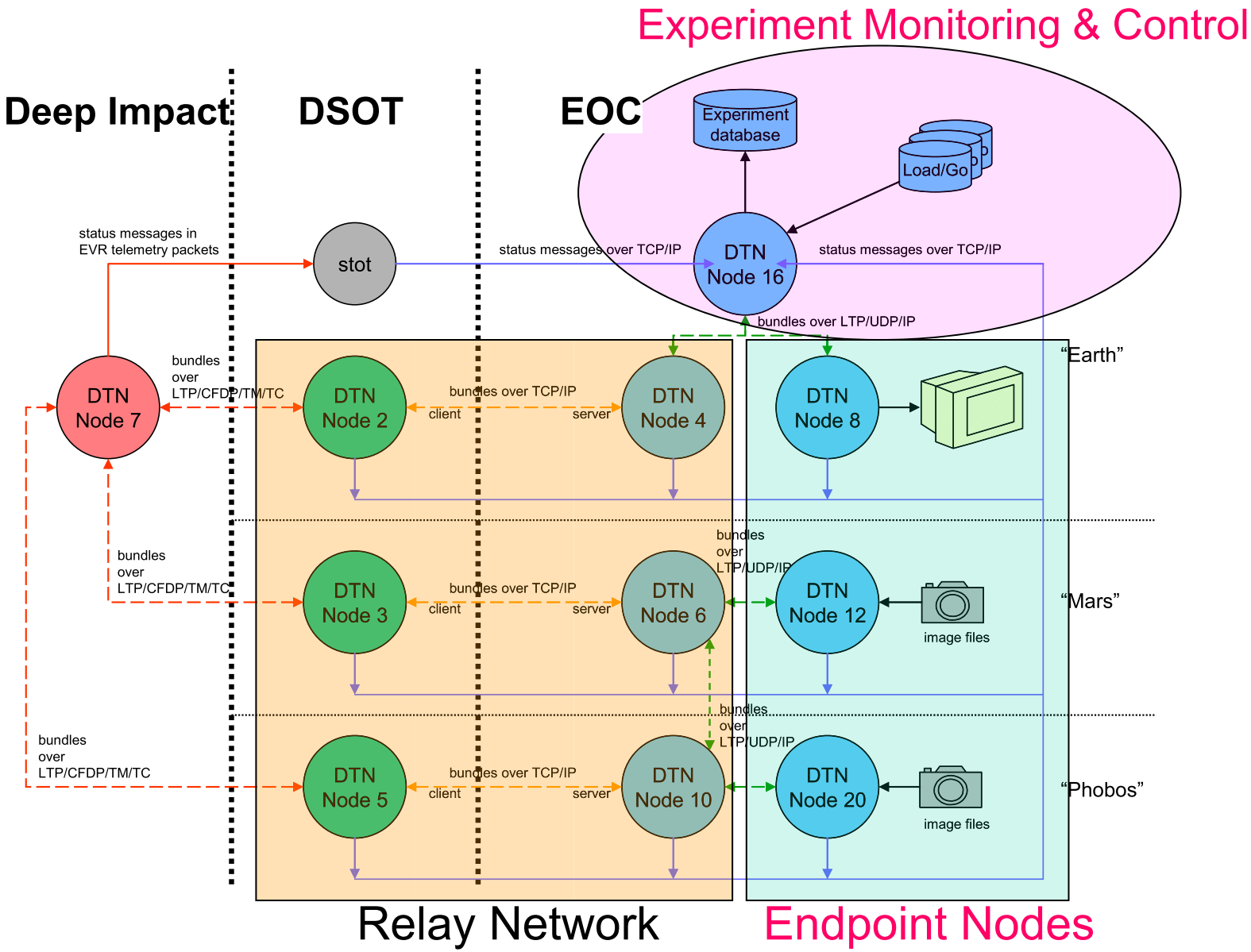

DINET EOC

DINET structure and software for the administrative node

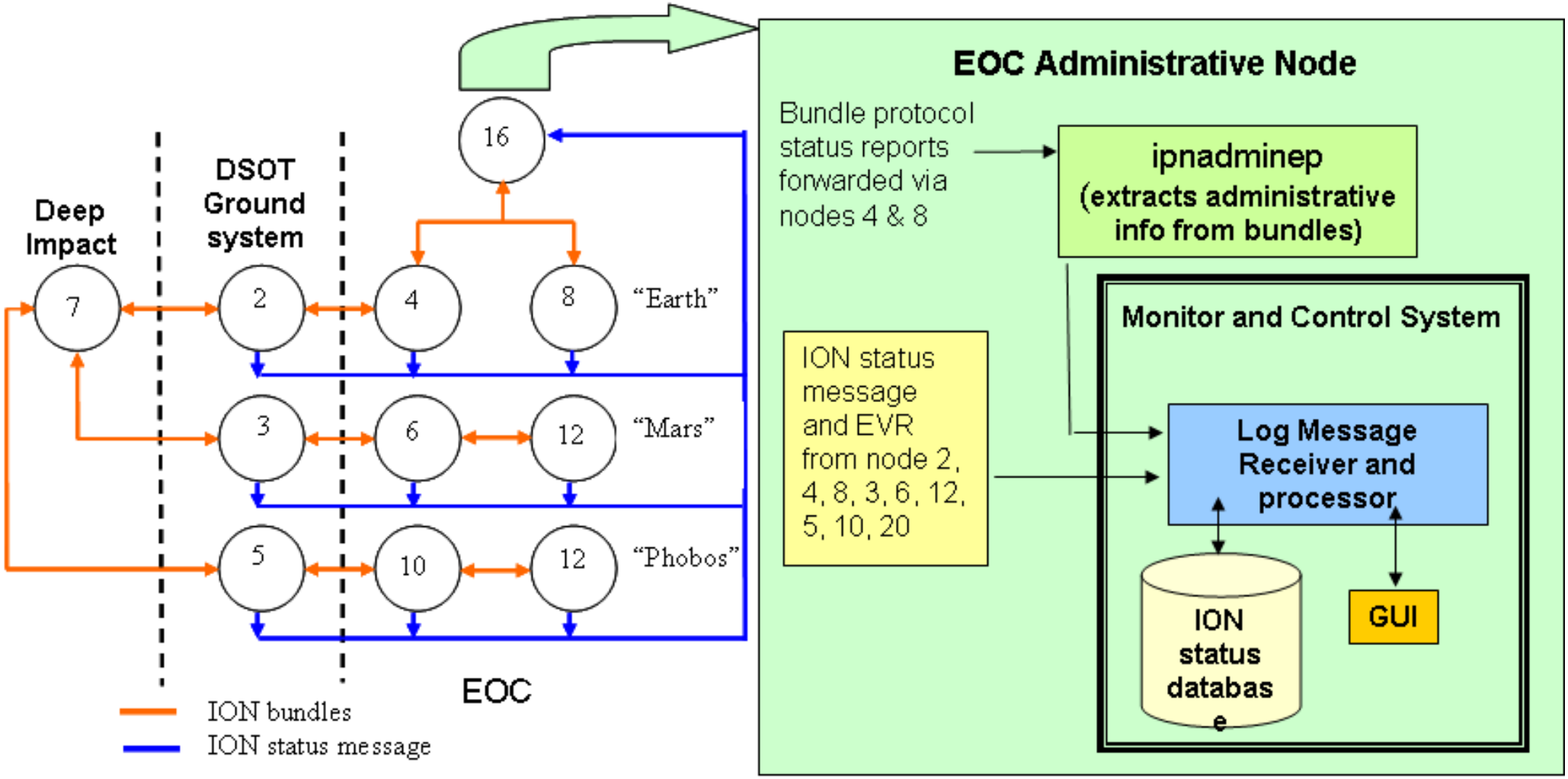

Space DTN: DINET Experiment Operations Center

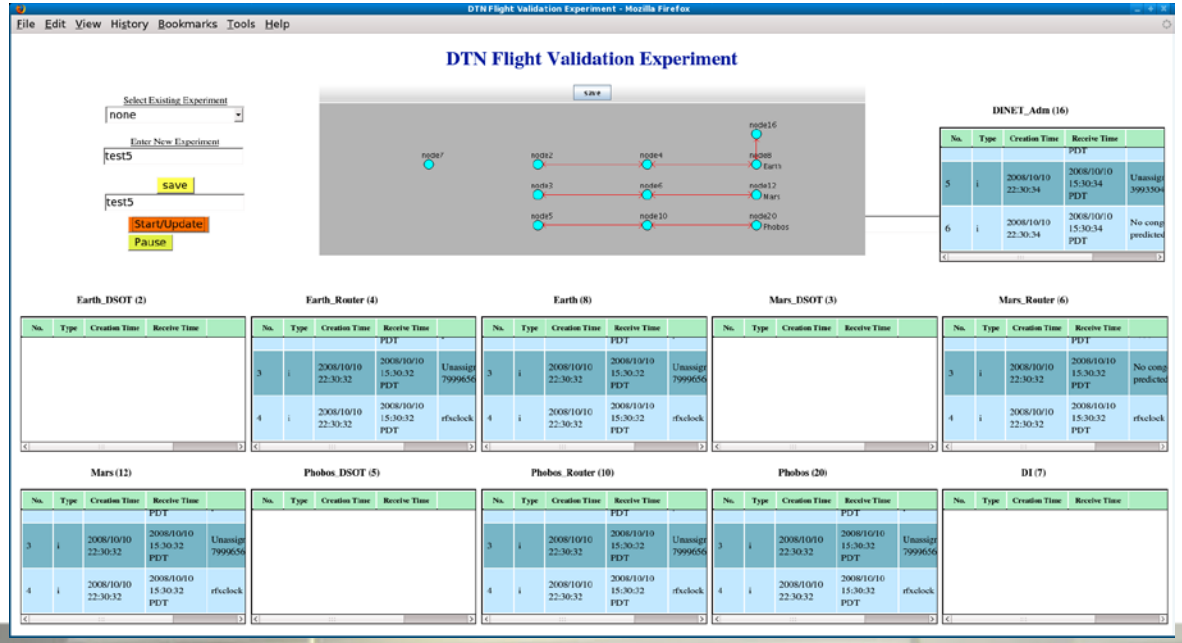

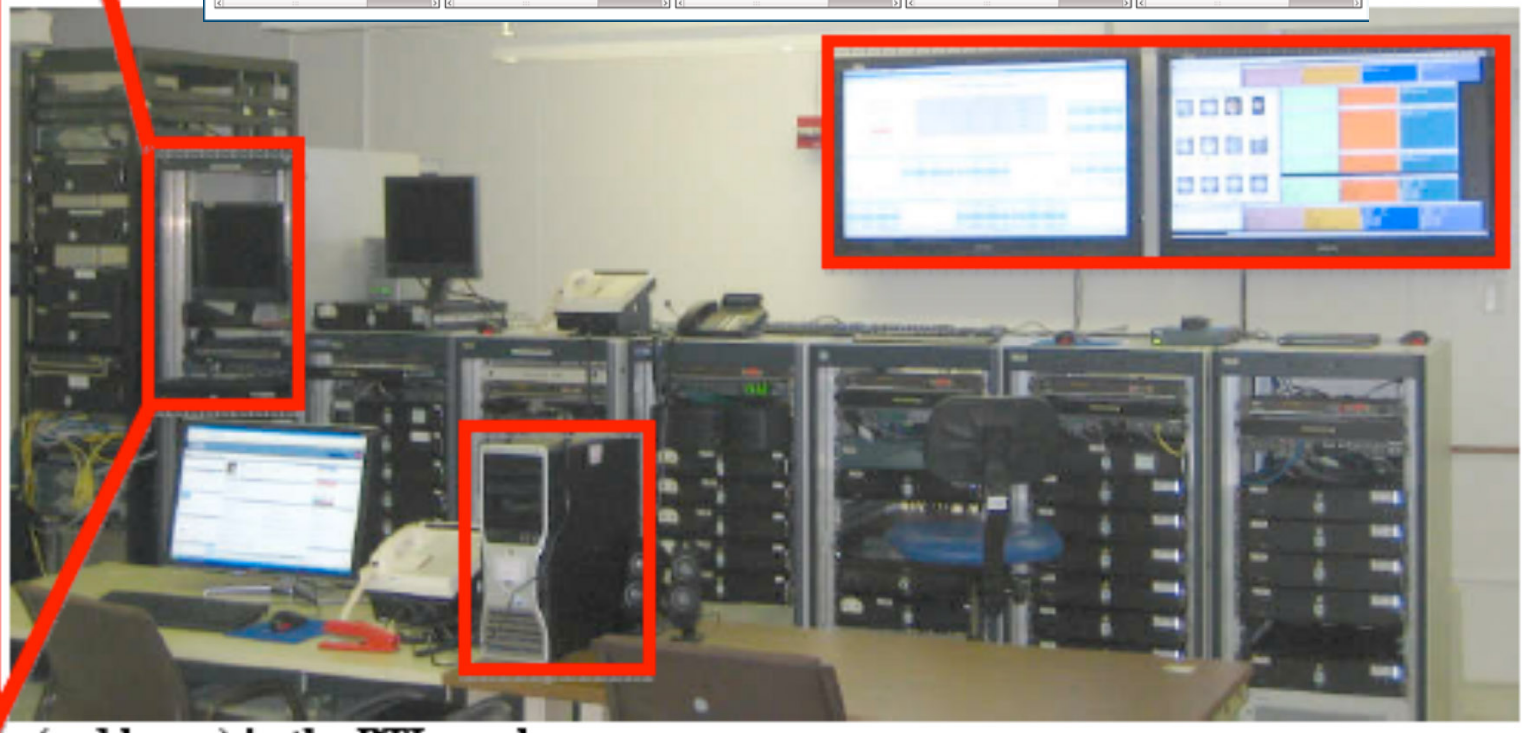

DINET Results

- The DTN protocols work well
  - Signal propagation delays of 49 to 81 seconds were tolerated
  - End-to-end latencies on the order of days were tolerated
  - Station handovers and transient failures in DSN uplink service were handled automatically and invisibly
  - Protocol overhead was minimal
  - Dynamic route computation was generally successful
- DINET EOC
  - Successfully generated experiment data from all source nodes, including priority markings
  - Received all experiment data, presenting live displays as well as archiving
  - Provided realtime experiment status, such as link topology, and bundle reports
  - Collected all experiment information in database accessible for analyses

Conclusions

- Disruption Tolerant Networking has been validated in the DINET deep space flight experiment
  - Based on JPL Interplanetary Overlay Network (ION) implementation
  - Utilizes Bundle Protocol, Contact Graph Routing, and LTP
- A critical component of the DINET experiment was the Experiment Operations Center
  - Provided essential functions necessary to conduct, monitor, and perform post-analysis