AAS 09-357

AN OVERVIEW OF THE JUPITER EUROPA ORBITER CONCEPT'S EUROPA SCIENCE PHASE ORBIT DESIGN

Robert E. Lock[*], Jan M. Ludwinski[*], Anastassios E. Petropoulos[*], Karla B. Clark[*], Robert T. Pappalardo[*]

Jupiter Europa Orbiter (JEO), the proposed NASA element of the proposed joint NASA-ESA Europa Jupiter System Mission (EJSM), could launch in February 2020 and conceivably arrive at Jupiter in December of 2025. The concept is to perform a multi-year study of Europa and the Jupiter system, including 30 months of Jupiter system science and a comprehensive Europa orbit phase of 9 months. This paper provides an overview of the JEO concept and describes the Europa Science phase orbit design and the related science priorities, model payload and operations scenarios needed to conduct the Europa Science phase. This overview is for planning and discussion purposes only.

INTRODUCTION

Missions to explore Europa have been imagined ever since Voyager mission data first suggested that Europa might be geologically youthful and might have an internal ocean today. Starting in late 1995, the Galileo mission delivered orbit after orbit of new insights into the Jupiter system and the worlds of Io, Europa, Ganymede and Callisto. Extensive architectural studies building on and expanding on Europa, Ganymede, and Jupiter System science have been performed over the past decade. The Galilean satellites are quite diverse with respect to their geology, internal structure, evolution and degree of past and present activity. In order to place Europa and its potential habitability in the right context, as well as to fully understand the Galilean satellites as a system, the two internally active ocean-bearing bodies—Europa and Ganymede—are of particular interest. Since 1996, NASA has studied concepts to reach Europa and unveil its secrets.

In 2008, ESA and NASA initiated joint studies of the Europa Jupiter System Mission (EJSM), and a parallel study, known as the Titan Saturn System Mission (TSSM). Both EJSM and TSSM responded to high priority science objectives identified in the U.S. National Research Council's Decadal Survey and ESA's Cosmic Vision for exploration of the outer solar system. The studies used as a launching point independent NASA and ESA studies in 2007, which addressed missions to the Jupiter system (Jupiter System Orbiter), Ganymede (Laplace), and Europa Explorer, and missions to Titan in the Saturn system, Titan Explorer and TandEM. In February 2009, NASA and ESA prioritized the two missions with EJSM which would be launched first (in 2020) and a Titan mission which would be readied for a later launch date.

The EJSM conceptis comprised of a NASA orbiter, Jupiter Europa Orbiter (JEO) and an ESA orbiter, Jupiter Ganymede Orbiter (JGO). Each orbiter mission would address very important

[*] Jet Propulsion Laboratory, California Institute of Technology, Pasadena CA, 91109

subsets of the complete EJSM science objectives and are designed to function in concert with one another or as stand-alone missions if necessary. The JEO mission element would address high priority science goals relating to the habitability of Europa as well as goals related to Jupiter and the Jupiter system. JGO would likewise address science goals for Ganymede, Jupiter and the Jupiter system.

The JEO baseline mission concept would use a single orbiter flight system that would travel to Jupiter by means of a multiple-gravity-assist trajectory and perform a multi-year study of Europa and the Jupiter system, including 2-3 years of Jupiter system science and a comprehensive science phase of 9-12 months in orbit around Europa. The JEO mission science objectives, as defined by the international EJSM Science Definition Team (SDT), include:

A. Europa's Ocean: Characterize the extent of the ocean and its relation to the deeper interior

B. Europa's Ice Shell: Characterize the ice shell and any subsurface water, including their heterogeneity, and the nature of surface-ice-ocean exchange

C. Europa's Chemistry: Determine global surface compositions and chemistry, especially as related to habitability

D. Europa's Geology: Understand the formation of surface features, including sites of recent or current activity, and identify and characterize candidate sites for future in situ exploration

E. Jupiter System: Understand Europa in the context of the Jupiter system

In addition to these science objectives, NASA provided study guidelines, including:

- Launch between 2018 and 2022, with preferred flight times to Jupiter of < 7 years
- Use the 34m DSN station network for primary science downlink
- Carry robust margins in all areas (technical and financial)

The primary challenge of a Europa orbital mission is to perform in Jupiter's radiation environment, radiation damage being the life limiting parameter for the flight system. Designing for reliability and long life requires key knowledge of the environment, understanding of available hardware, conservative hardware and software design approaches, and a management structure that elevates the importance of radiation issues to the project office level. Instilling a system-level radiation-hardened-by-design approach very early in the mission concept development further mitigates the pervasive mission and system level impacts (including trajectory, configuration, fault protection, operational scenarios, and circuit design) that could otherwise result in increased cost and technical resource growth.

The baseline mission design in the Europa Science phase responds to the challenge of radiation limited lifetime. Science objectives would be prioritized and phased to return the highest priority data soonest. Orbits would be designed and transitions timed to achieve the science objectives in the priority order. Operations scenarios connecting payload observing plans, orbit geometry and timing, and spacecraft pointing, power management, data storage, and telemetry downlink rates would be used to validate the mission design, model payload concept and spacecraft design concept.

After launching in February 2020 and completing a cruise of just under six years, including one Venus and two Earth gravity assist flybys, JEO would arrive at Jupiter in December of 2025. A 2-3 year tour of the Galilean satellites would be used both to achieve key Jupiter and Jupiter system science objectives as well as to lessen the ΔV needed for Europa Orbit Insertion (EOI). In mid-2028, JEO would be inserted into a low altitude, near circular, high inclination orbit designed

to meet the earliest and highest priority science objectives for the first of four Europa Science Campaigns in the Europa Science phase. The initial orbit would be 200km altitude, 95 deg inclination, with a nearly two week repeat cycle. After the first 28 days, the orbiter would transition to a 100 km orbit altitude to complete the remaining 3 Europa Science Campaigns. The mission would end when the flight system could no longer be controlled and the orbit would degrade such that the spacecraft would impact Europa within months. The end of the mission would likely result from loss of spacecraft control due to radiation degradation of electronics, after which the flight system would eventually impact Europa.

This paper will provide an overview of the current baseline JEO concept and with a special emphasis on the Europa Science phase of the mission. The trades and operations scenarios that led to the choice of the orbit altitude, inclination, local solar times, and repeat cycles will be addressed in the context of the science goal and objectives, key challenges and system design for the overall mission.

SCIENCE GOALS AND OBJECTIVES

To address the overarching EJSM theme of "The emergence of habitable worlds around gas giants," JEO would explore the Jupiter system and study the processes leading to the diversity of its associated components and their interactions. The focus would be to characterize the conditions that may have led to the emergence of habitable environments among its satellites, with special emphasis on the internally active ocean-bearing world, Europa.

Derived from the EJSM theme, JEO's goal would be:

Explore Europa and to investigate its habitability.

Based on previous magnetometer data, Europa is believed to have a saltwater ocean beneath a relatively thin (several to tens of kilometers thick) and geodynamically active icy crust (Figure 1). Europa is unique among the large icy satellites because its ocean is in direct contact with its rocky mantle beneath, where the conditions could be similar to those on Earth's sea floor. The discovery of biologically-rich hydrothermal fields on Earth's sea floor suggests that such areas are rich habitats, powered by geothermal energy and fed by nutrients that result from reactions between the sea water and silicates. Analogously then, Europa is a prime candidate in the search for habitable zones in the solar system.

NASA's JEO spacecraft would establish Europa's characteristics with respect to geophysical activity and habitability. JEO would investigate Europa in detail and has objectives to:

A. **Europa's Ocean**: Characterize the extent of the ocean and its relation to the deeper interior. Relevant investigations include: Europa's gravitational tides; the magnetic environment (including plasma); tidal surface motion; the satellite's dynamical rotation state; and its core, mantle and rock-ocean interface.

B. **Europa's Ice Shell**: Characterize the ice shell and any subsurface water, including their heterogeneity, and the nature of surface-ice-ocean exchange. Relevant investigations include: detection of shallow water within the ice shell; detection of the ice-ocean interface; material exchange between the surface and ocean; and heat flow variations.

C. **Europa's Chemistry**: Determine global surface compositions and chemistry, especially as related to its habitability. Relevant investigations include: understanding the satellite's organic and inorganic chemistry; relationships of composition to geological processes; radiation effects on chemistry; and the nature of exogenic materials.

D. **Europa's Geology**: Understand the formation of surface features, including sites of recent or current activity, and identify and characterize candidate sites for future in situ exploration. Relevant investigations include: formation history and three-dimensional characteristics of surface features; the existence of current or recent activity and the characterization of future landing sites; and processes of erosion and deposition.

E. **Jupiter System**: Understand Europa in the context of the Jupiter system. This includes several sub-objectives, specifically: satellite surfaces and interiors; satellite atmospheres; plasma and magnetospheres; Jupiter's atmosphere; and rings.

The Jupiter system includes a broad diversity of objects, including Jupiter itself, 55 currently known outer irregular satellites, the Jovian ring system, four small inner satellites, and the four large Galilean Satellites: Io, Europa, Ganymede, and Callisto.

BASELINE MISSION AND SYSTEM OVERVIEW

Mission Phases

The JEO mission element would be composed of three mission phases. The Interplanetary phase, almost 6 years long, would be the period in which the orbiter is launched, performs gravity assist flybys of Venus and Earth, and prepares for the Jupiter Orbit Insertion (JOI) event and Jupiter science operations. The Jovian Tour phase would be focused on science activities in the 30 months after JOI and before arrival at Europa. The Europa Orbit phase would be the 9 months after Europa orbit insertion that returns the highest priority science for the mission. A timeline of the notional JEO mission is shown in Figure 1.

Launch and Interplanetary Cruise Phase

JEO would be launched from Cape Canaveral Air Force Station on an Atlas V 551 with a maximum C_3 of 12.8 km^2/s^2 during a 21 day launch period opening on 29 February 2020. JEO would use a Venus-Earth-Earth Gravity Assist (VEEGA) interplanetary trajectory. The flight system is designed to launch on any given day in the launch period without modification. After launch a month of flight system deployment, checkout, and the injection-cleanup maneuvers would be planned and would use round-the-clock tracking by DSN 34 m antennas.

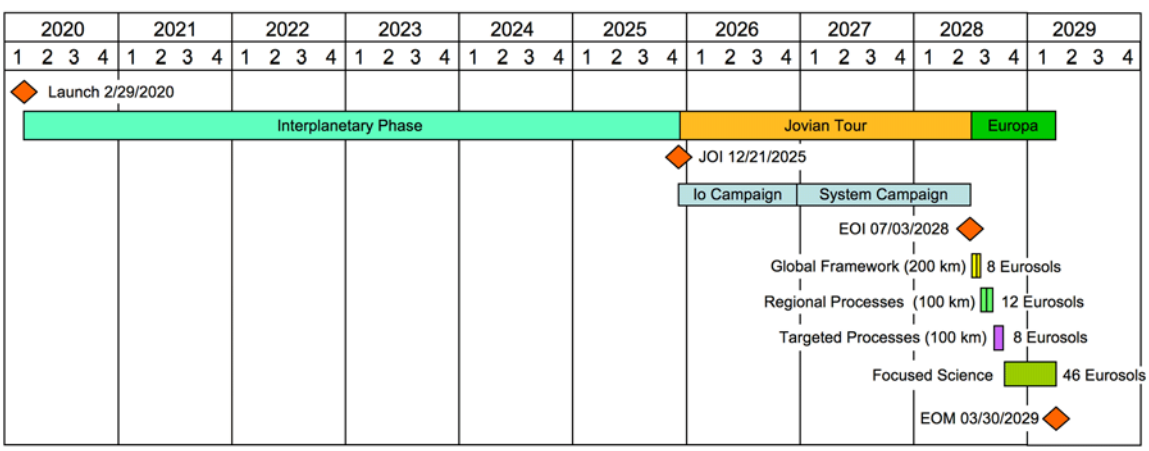

Figure 1. Notional JEO Mission Phase Timeline

The nearly 6 year duration of cruise would drive the DSN tracking to be economical and still ensure safe delivery to Jupiter orbit. Early in cruise, three passes per week would provide the necessary tracking needed for navigation analysis and flight system characterization activities. Later,

tracking can generally be decreased to one or two 8 hour passes per week. For annual spacecraft and instrument health checks, gravity assists flyby periods or propulsive maneuvers the tracking would be augmented around each event. About 18 months before JOI, tracking frequency would be increased from 1 tracking pass per day to nearly continuous tracking in the weeks prior to the Jupiter Orbit Insertion (JOI) maneuver.

Jupiter Arrival

After the interplanetary cruise phase, JEO would fly by Io roughly two hours prior to performing JOI. This flyby is designed primarily to give JEO a gravity assist, reducing the magnitude of the JOI maneuver by about 200 m/s. JOI straddles the 5.2 Jovian radii (Rj) perijove and would put JEO into an orbit with a period of about 200 days. DSN tracking would use continuous 34m passes during the weeks surrounding JOI, dropping to daily passes after flight system safety and precision orbit knowledge is assured.

Near apojove of the first orbit, a maneuver would target JEO to the second Io encounter of the mission, which would be the first Io encounter of the tour. In the process, it would correct for the solar perturbations induced as a result of the rather large initial orbit and remove any remaining errors from the initial Io flyby and JOI.

Jovian Tour

In the Jovian Tour phase, the flight system would make routine and frequent observations of Jupiter, its satellites, and its environment and would feature a 30-month gravity-assist tour to lower its orbital energy with respect to Europa (saving at least 3 km/s over what would otherwise be a prohibitively expensive earlier direct orbit insertion). The tour would begin with an Io Science Campaign involving three Io flybys after JOI, and continues with a System Science Campaign that would involve flybys of each of the other Galilean satellites. It would include three close Io encounters (after JOI), six with Europa, six with Ganymede, and nine with Callisto. In addition to the observations acquired during satellite flybys, science observations of the Jovian magnetosphere and atmosphere, and monitoring of Io, would be planned between encounters during the Jovian Tour phase.

Once in Jupiter orbit, tracking is scheduled for daily 8 hour 34 m passes, intended to support Jovian system science data collection and navigation. This routine is augmented around fly-bys to support navigation tracking and increased science.

Europa Science

The Jovian Tour ends with Europa orbit insertion. In orbit, DSN tracking is continuous 34 m tracking for 105 days to maximize science return. Focused Europa science would continue for an additional 9 months with tracking reduced to one 34m track per day.

After EOI and a five day engineering assessment and orbit adjustment period, the Europa science campaigns would be executed as a series of observation campaigns designed to obtain Europa science objectives in priority order. The rotation rate of Europa is 3.551 days, referred to as a eurosol, and is a handy planning unit. The Europa science campaigns are:

- Europa Campaign 1, Global Framework at 200 km orbit for 8 eurosols (28 days)
- Europa Campaign 2, Regional Processes at 100 km orbit for 12 eurosols (43 days)
- Europa Campaign 3, Targeted Processes at 100 km for 8 eurosols (28 days)
- Europa Campaign 4, Focused Science at 100 km for 46 eurosols (165 days)

After the orbit maintenance fuel is depleted or the flight system ceases to function, the orbiter would eventually impact the surface of Europa.

Flight System Overview

The JEO flight system concept is based on the wealth of work performed in last several years: the Europa Explorer FY07 Final Report, which in turn was based on the Europa Explorer Design Team Report 2006 as well as from Europa Geophysical Explorer (2005), Europa Orbiter (2001), and numerous trade studies conducted over the past decade. The technology to fly such a mission has advanced in the past decade, especially in areas of launch vehicles, avionics, radioisotope power sources, and detectors. While showing incremental improvements, the overall design has become remarkably stable, suggesting that the requirements are well-understood.

Key design drivers on the flight system are Jupiter's radiation environment, planetary protection, high propulsive needs to get into Europa orbit, the large distance from the Sun and Earth and the accommodation of the instrument payload. The high-level constraints and assumptions on the JEO flight system design are:

- The flight system design shall employ technology that either exists already or is under development and is planned for qualification early in the JEO project lifecycle.
- The mission reference radiation design dose (referenced to 100 mil aluminum shell) is 2.9 Mrad.
- The required total ΔV is 2260 m/s.
- Approximately 7.3 Gbits of science data is returned per Earth-day during the Europa science phase and ~3.6 Gbits per Earth-day during the Jupiter tour phase.
- 34 m DSN antenna used during normal operations, with limited 70 m antenna use (or equivalent) for critical or emergency events.
- Heliocentric operating range of 0.7 AU to 5.5 AU, with a maximum Earth range of 6.5 AU.

Radiation is the key defining challenge and life limiting consideration for the flight system. Due to the high radiation environment at Jupiter, the flight system must be designed from the outset to address radiation tolerance. The JEO conceptual radiation approach has to go well-beyond conventional approaches to address a mission in such a harsh environment. The radiation protection for the JEO flight system would involve an approach that starts with a mission design that considers radiation dose while meeting JEO science objectives, a significant program to judiciously select radiation hardened parts and material capability, detailed shield mass composition design, deliberate component placement within assemblies, and systematic refinement of reliability assessment modeling of the electronics and subassemblies from the ground up. System lifetime analyses have been performed and provide the basis for projected mission duration of the JEO mission concept.

All electronics would need to be redesigned to incorporate rad-hard parts. Analyses and packaging would need to be re-done. Thus, no off-the-shelf electronics are assumed.

The radiation shielding approach is to communally shield assemblies of similar rad-hardness. Grouping similarly rad-hard assemblies together in separate enclosures (as opposed to using a single vault for all assemblies, regardless of their need) would optimize shield mass (by avoiding a heavier shield mass penalty from having to shield everything down to the "lowest common denominator" part tolerance level) and allow for placement of electronics in strategic locations, such as the traveling wave tube amplifiers (TWTAs) on the back of the high gain antenna (HGA).

The JEO flight system is designed to meet the planetary protection requirements that result from being classified as Category III under COSPAR and NASA policy, which specifies that JEO show that the probability of inadvertent contamination of an Europan ocean be less than 1 × 10-4. Given the limits of this paper, this topic will not be addressed here, but planning is underway to implement a process and strategy that would allow JEO to meet this requirement with cleanliness strategies embedded into the design, build and integration process.

The flight system design is comprised of an orbiter and a science payload. The orbiter would be a mostly redundant, 3 axis stabilized spacecraft powered by Multi-Mission Radioisotope Thermoelectric Generators (MMRTGs). The model payload has 11 instruments, including the radio system for gravity science investigations. The flight system launch mass, including 43% margin, is 4704 kg with respect to the currently quoted Atlas V 551 capability of 5040 kg.

The high propulsive requirements to get into Jupiter orbit and subsequently into Europa orbit drive the large propellant load required and the dry mass of the propulsion subsystem to hold the propellant. The dual-mode, bi-propellant propulsion system holds approximately 2646 kg of propellant, comprised of hydrazine (N_2H_4) fuel and nitrogen tetroxide (N_2O_4 or NTO) oxidizer. The 890 N (200 lbf) bipropellant main engine would be 2-axis gimbaled. Radiation primarily affects two propulsion components; pressure transducer electronics and soft goods within electrical valves. Further research into pressure transducers used in the nuclear power industry is still required. The primary soft goods in valves are the sealing materials, such as Teflon, AF-E-411 (rubber), Vespel, etc. Better characterization of the properties and performance of these materials in high radiation environments is required.

Small thrusters, 4.5 N (1 lbf) each, would be used to reduce post-launch separation rates, to provide attitude control during cruise, small ΔV maneuvers, and to desaturate the reaction wheels. Because the detection of the tidal signature would require an orbit reconstruction with a radial error of about 1 m, residual ΔV must be minimized during the Europa science phase and so the small thrusters are coupled and redundant. The flight system attitude would be controlled primarily with reaction wheels during science operations.

Attitude sensors include redundant stellar reference units (SRU), an internally redundant gyro, and multiple sun sensors, all of which would be selected based on their radiation tolerance. During peak radiation environments, such as near Io, the pointing knowledge performance would be degraded as the SRU may experience false star identification and pointing would rely on the gyros only. JPL has extensive experience with radiation mitigation strategies for SRUs in the Jovian environment as a result of work performed with SRU vendors for NASA's Juno New Frontiers Mission and the Europa Orbiter SRU Concept Design Study of 1999–2000. In both cases, shielding was key for detector total-dose survival as well as reduction of the transient noise and false star identification, due to external electron and proton flux. Algorithms would be developed based on the understanding of transient thresholds of the various radiation environments, such as those during an Io flyby versus in Europa orbit.

Five Multi-Mission Radioisotope Thermoelectric Generators (MMRTGs) would power the flight system, providing about 540 watts of electrical power at End of Mission (EOM) with an unregulated, nominal 28 Vdc main power bus (22–36 VDC). Redundant 12 Ah lithium-ion batteries would provide for energy storage to handle transient demands for power throughout the mission, such as during Europa Science phase when simultaneously operating science instruments and communicating with Earth. Grounding would be established for a balanced bus, with both high side and return floating from spacecraft chassis for additional fault tolerance. Pyros would be fired directly off the main bus power through the Arm and Enable switches. All power electronics would be designed to be radiation hard to 1.0 Mrad.

Waste heat from the MMRTGs would be used for thermal control to the maximum extent practical, in order to reduce electrical power that would otherwise be allocated for heaters. Radioisotope Heater Units (RHUs) and Variable RHUs would also be used for the same reason. In addition, the thermal design uses multilayer insulation (MLI), thermal surfaces, thermal conduction control, thermal louvers (both external and internal), electric heaters and thermostats/engineering sensors to thermally control the spacecraft. The Venus gravity assist flyby would impose the Venus IR thermal load as well as the direct solar incident energy on the flight system. The orbiter conceptual design would protect the flight system from both the Venus IR thermal load as well as the direct solar incident thermal energy using additional MLI layers with appropriate stand-off distances.

The 4.2 to 6.5 AU variation in distance from Earth during the Jupiter orbital mission would require a very capable telecommunications system to return the significant data required to meet the science objectives. The flight system would use Ka band for the highest rate science data return and X band for high and low rate communications system during cruise, safing, critical events, and for all uplink commanding. Key features of the design would include redundant cross-strapped X/Ka-band Small Deep Space Transponders (SDSTs), redundant cross-strapped 25 W Ka-band traveling wave-tube amplifiers (TWTAs), redundant cross-strapped 25 W X-band TWTAs, a 3-m X/Ka 2-axis gimbaled high gain antenna (HGA), one X-band medium gain antenna (MGA), two X-band low-gain antennas (LGAs), an Ultra Stable Oscillator (USO), and a Ka-band Transponder (KaT) for high precision radio science.

Most of the telecom hardware would be mounted on the back of the HGA thereby reducing the circuit loss between the output of the high-power amplifiers and the antennas. The medium gain antenna and 2 low gain antennas would be used for near earth and safe mode communications. Two sun sensors would be mounted on the HGA for safemode attitude on the MGA. During the Jupiter tour phase, the telecom subsystem would provide Ka band downlink performance of 64–144 kb/s over the 4.2 to 6.5 AU range to a DSN 34 m antenna. The link carries 3 dB of margin, and assumes 90% weather, 20 deg station elevation, Turbo coding (8920, 1/6) with frame error rates of 10-4, and residual carrier BPSK modulation. Traditional link designs typically assume worst-case station elevation angles and other system noise sources (yearly weather effects, Jupiter hot body noise, etc.) when determining supportable data rate. By taking advantage of actual elevation angles and Jupiter noise conditions for each orbit lockup at occultation exit, planned data rates could be increased, on average, by roughly a factor of 2. For the Europa orbit phase, this strategy is assumed and the Ka band link performance to a 34 m DSN antenna increases to 134–280 kbps over the 4.2–6.5 AU range.

The data processing and handling architecture includes a dual-string RAD750 computer running at 200 Mhz that would be capable of performing all science and engineering functions including identified science data compression. It would use Spacewire ports for high data rate connections and 1553B data bus for lower data rate interfaces and connections between the redundant strings. Data storage would be implemented using a hybrid Solid State Recorder (SSR) that would contain:

- 3.1 Gb of non-volatile chalcogenide random access memory (CRAM) with 1 Gb currently allocated for science use, and the remaining 2.1 Gb allocated for engineering and science flight software (FSW), engineering telemetry, processing space, and margin,
- 16 Gb of volatile synchronous dynamic RAM (SDRAM) dedicated to science use, particularly around the Galilean satellite flybys during the Jovian Tour phase. The SDRAM would not be required to survive through Europa orbit insertion.

FSW would be a key component of the system architecture with features that would allow for ease of operations during flight and for a fault response approach that would balance continued degraded mission progress with transient fault recovery. A Europa mission would necessarily compress a series of essential activities into the confined space of months. This aggressive time-line is driven by high radiation levels in the vicinity of Europa. Addressing the needs for the JEO concept is within capabilities that have been demonstrated in past missions.

The conceptual configuration of the baseline flight system is shown in Figure 2 (stowed in the launch vehicle) and Figure 3 (operational). Major configuration drivers were as follows:

- Nadir pointing fields-of-view for remote sensing instruments at Europa
- Simultaneous pointing of instruments and pointing of HGA at Earth
- Large boom and radar antenna accommodation
- Usage of propellant tanks with existing diameter sizes
- Atlas V fairing envelope and access door size and number (3 doors, each at 1.2 × 1.8 m or 4 × 6 feet), accommodating 5 MMRTGs and the HGA
- MMRTGs view of each other and to space with maximum distance to instruments
- Eight RCS thruster clusters with placement driven by the coupling requirement and plume impingement avoidance of instruments, HGA, and MMRTG.

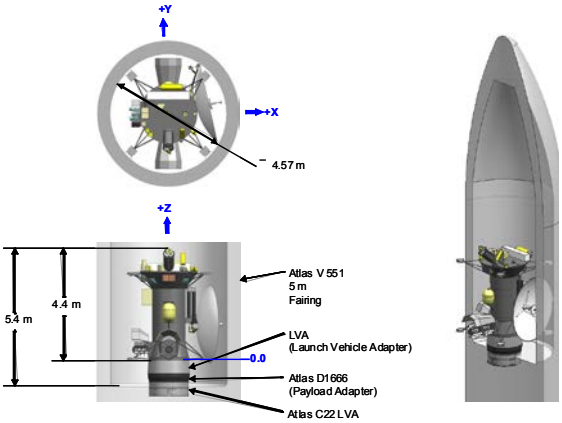

Figure 2. Conceptual Stowed Configuration of JEO Flight System in Atlas V LV Fairing

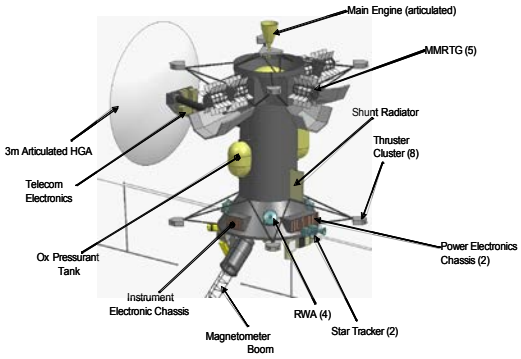

Figure 3. Operational Configuration of JEO Flight System

Model Payload

The JEO model payload has been defined to quantify engineering aspects of the mission and spacecraft design, and to analyze operational scenarios required to obtain the data necessary to meet the science objectives. The instruments, while notional, were defined to demonstrate a via-ble approach to meeting the measurement objectives, to perform in the radiation environment at Europa, and to meet planetary protection requirements. The actual JEO instrument suite would ultimately be the result of a solicitation through a NASA Announcement of Opportunity.

The model payload consists of a notional set of remote sensing instruments, in situ instru-ments, and both X- and Ka band telecoms systems which would provide Doppler and range data for accurate orbit reconstruction. All remote sensing instruments would be co-aligned and nadir

pointed for simplification of operations. Instrument articulation required for target motion compensation, limb viewing or other purposes is assumed to be implemented within the instrument. All instruments would be mounted on the nadir-facing deck of the spacecraft with the exception of the Magnetometer (MAG) which would be located on a 10-m boom. The high-gain antenna (HGA) would be deployed well clear of instrument fields of view and would be articulated in 2 axes to decouple instrument pointing from the telecom link to Earth.

The instruments would require substantial radiation shielding. The most mass-efficient approach to providing this shielding is to centrally locate as much of the instrument electronics as possible, minimizing the electronics that must be co-located with the sensor portion of the instrument. This payload architecture would include a common Science Electronics Chassis supporting 22 electronics boards on the industry standard 6U cPCI format. This chassis would provide shielding sufficient to allow use of components hardened to 300 krad without additional spot shielding. Internal partitioning of the science electronics is baselined to provide electrical isolation between instruments and to mitigate electromagnetic interference (EMI). Louvers would provide thermal control of the science electronics chassis in the same manner used for the spacecraft avionics systems. Spacecraft telemetry and command interfaces would be Spacewire for high-bandwidth instruments and Mil-Std-1553 for low-bandwidth instruments. Instrument power would be provided by a 28 V bus.

The JEO model payload is comprised of 11 instruments including radio science. In most cases the notional instrument defined for the model payload meets or exceeds the JEO science objectives and desired measurements. In some cases, the desired measurement capability is greater than the measurement capability provided by the model payload instrument and reflects decisions by the SDT regarding the priority of science objectives in light of limited resources. This does not preclude future selection of instruments with broader capabilities. Table 1 shows an overview of the notional instruments comprising the JEO model payload.

Table 1: Science Model Payload Instruments

Model Payload	Science Contribution	Characteristics
Laser Altimeter (LA)	Amplitude and phase of gravitation tides on Europa; Quantitative morphology of Europa surface features	Single-beam @1064 nm 50 m spot @ 100 km 26 Hz pulse rate
Radio Science (RS)	Tidal state of Europa to determine the extent of the ocean and its relation to the deeper interior; Interior state of Ganymede & Callisto	2-way Doppler with Ka-band transponder Ultra-stable Oscillator
Ice Penetrating Radar (IPR)	Europa ice/water interface and identify warm ice and/or water pockets within the ice shell	Dual frequency: ~5 and ~50 MHz, Vertical depths: 3 and 30 km Dipole antenna: 30 m
Visible-IR Spectrometer (VIRIS)	Composition of non-ice components on Europa, Ganymede & Callisto; State & crystalinity of ices; Io volcano monitoring; Jupiter atmosphere composition	Pushbroom imaging spectrometer with two channels and along-track scan system Spec. range: 400-5200 nm Spec. res: 5 nm @ <2.6 µm Spec. res: 10 nm @ >2.6 µm IFOV: 0.25 mrad @ <2.6 µm IFOV: 0.50 mrad @ >2.6 µm FOV: 9.2°
Ultraviolet Spectrometer (UVS)	Composition & dynamics of the atmospheres of the Galilean satellites	EUV grating spectrometer with scan system for stellar occultations Spectral range: 70-200 nm IFOV: 1.0 mrad FOV: 3.7°
Ion and Neutral Mass Spectrometer (INMS)	Composition of sputtered products from Europa	Reflectron Time-of-Flight Mass range: 1-300 Daltons Mass resolution: >500
Thermal Instrument (TI)	Map temperature anomalies and thermal inertia of surface materials on Europa; Jupiter atmosphere composition & dynamics	Pushbroom imaging thermopile line arrays Thermal band: 8-20 µm Thermal band: 20-100 µm 4 narrow filter bands IFOV: 2.5 mrad FOV: 3.0°
Narrow Angle Camera (NAC)	Local-scale geologic processes on Europa, Ganymede & Callisto; Io volcano monitoring; Jupiter cloud dynamics & structure	Orbital Mode: Panchromatic pushbroom imager OpNav Mode: Panchromatic framing imager Jovian Science Mode: 9 color framing imager (filter wheel) IFOV: 0.01 mrad FOV: 1.2°
Wide and Medium Angle Camera (WAC + MAC)	Regional-scale Europa Morphology & topography from stereo; Global to regional-scale morphology of Io, Ganymede & Callisto; Jupiter atmosphere dynamics	Wide: 3-color + panchromatic Pushbroom IFOV: 1 mrad FOV: 58° Med: panchromatic Pushbroom IFOV: 0.1 mrad FOV: 11°
Magnetometer (MAG)	Induction response from the Europa Ocean; Presence and location of water within Ganymede & Callisto	Dual tri-axial fluxgate sensors 10 m boom
Plasma and Particles (PPI)	Interaction between icy satellites and the space environment to constrain induction responses; Composition and transport in Io's plasma torus	Plasma Analyzer Electrons : 10 eV – 30 keV Ions: 10 eV – 30 keV Particle Analyzer Electrons: 30 keV – 1 MeV Ions: 30 keV – 10's of MeV High-energy Electrons: >2, >4, >8 and >16 MeV

EUROPA SCIENCE ORBIT DESIGN

Design of the Europa science orbit is based on design experience from previous mission studies and is the result of a balance between constraints and opportunities described by mission analysts and systems engineers with the varied observing desires on the part of the SDT members. The orbit requirements were established in early 2007 and have been stable since then. Early in the balancing process was a series of briefings from the engineering teams on the constraints and opportunities of the potential orbits of Europa, the design of the flight system and operations scenarios. In the same time period, the SDT discussed and prioritized the science goals and observations strategies that would meet the broadest range of science goals and objectives and mitigate the risk of early degradation or failure in the harsh radiation environment. All of the observing strategies discussed needed orbits that could be categorically described as high inclination, low altitude, circular orbits which have specific challenges for Europa.

Science Needs

A variety of science issues were traded to effect aspects of the science orbit design. High level mission goals and risk as well as observation resolution (and other quality parameters) were considered for the specification of desired orbit altitude at specific times in the mission. Inclination was driven by discussions for latitude access for the nadir pointing Laser Altimeter and for the imaging instruments desire to acquire complete global imaging, and by nodal regression rates needed to maintain desired lighting conditions for the imaging instruments.

As a risk mitigation strategy, and to ensure sufficient time to follow up on discoveries, the primary science hypotheses would be addressed in the first ~100 days of the science phase. The initial month (later refined to 8 eurosols or about 28 days) was to be at 200 km altitude to quickly acquire global maps and distributed observations of all types. A transfer to 100 km altitude for the remainder of the mission was intended to provide higher resolution and more detailed coverage.

The inclination selected for the orbit was the result of science trades between the Laser Altimeter wanting about a 70 degree latitude constraint for good crossover angles, near 90 deg latitudes for the imagers to obtain complete global coverage and polar imaging, and the desire for the nodal regression to be as close to sun-synchronous as possible for consistent lighting. The latitude constraint was set to 85 degrees and since the sun-synchronous inclination is about 91 degrees, the solution with the slowest nodal regression rate was for an orbit inclination of 95 degrees.

With infrared observations desiring lighting near noon local solar time, and global mapping desiring late afternoon lighting, a compromise set the node for a desired lighting condition of 3 pm local solar time. This is equivalent to 45 degrees from the Sun-Europa line. Because the orbit would not be sun-synchronous, the starting lighting was biased to 2:30 pm so it would remain near 3 pm for the first two months. The direction of the node (ascending/descending) was not specified and remains a free parameter for the design of the transfer into Europa orbit at EOI.

Ground-track repeat cycles were selected based on the desire to complete global imaging as quickly as possible (at each of the two orbit altitudes) and to distribute the radar, laser altimeter and other observations as evenly as possible and separated by less than 1 degree at the equator.

The science orbit desires were based on assumptions of the observing priorities for the model payload. After the payload is selected for the mission via the competed Announcement of Opportunity, these trades will be reconsidered.

Orbit Design

As described above, the science orbit at Europa needs to be low altitude (100–200 km), near circular, high inclination, with a 2:30 p.m. orbit. An example, shown in Figure 4, is for a 200 km orbit at 2:30 pm local solar time with groundtracks shown for one Eurosol (37 orbits). The North Pole and the Sun terminator are shown as well as a generic field of view for a 60° wide angle camera. Imaging of the area near the pole can be acquired with moderate off-nadir pointing. To meet the lighting requirements over the duration of the first three Europa Science campaigns, a retrograde orbit would be chosen, with the required inclination to be 95°. If left uncontrolled, arbitrary orbits with these characteristics become more eccentric, due to Jupiter's gravitational perturbations, and generally impact Europa within about a month. These orbits need to be maintained on a regular basis.

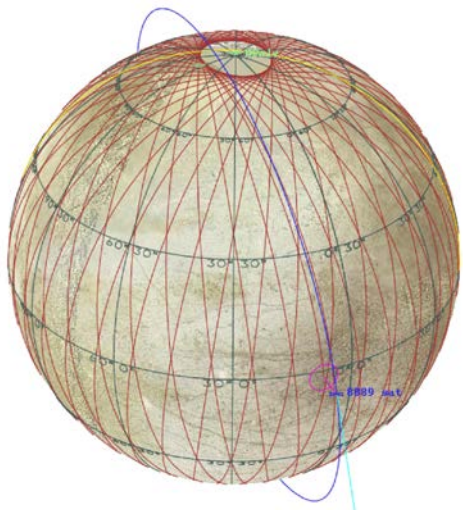

Figure 4. Example 200 km, 2:30 pm Orbit, with Groundtracks for 1 Eurosol

Special cases of "frozen orbits" have been demonstrated to increase orbital lifetimes several fold. These near-circular, long-lifetime orbits provide an efficient mechanism for minimizing orbit maintenance ΔV and maximizing time between required maneuvers.[7] The exact "frozen" orbital conditions depend on the details of the gravity field (especially J3) which cannot be known a priori. The gravity field would be determined from two-way Doppler measurements from a near-circular orbit at an altitude of 200 km during the post EOI engineering assessment and the initial Europa Science Campaign, the first ~33 days of the Europa Science phase. Based on estimates of the dominant gravity field terms from Galileo measurements, the expected average eccentricities of the frozen orbits are < 0.01. Due to the third-body perturbation, the semi-major axis and inclination would have periodic variations of a few km and a couple of degrees, respectively.

During the initial Europa Science Campaign, the parameters for the second orbit would be chosen after determining the lower-order gravity field terms. Then the flight system would transfer from the initial 200 km orbit to a 100 km orbit for the remainder of the mission.

At 200 km altitude, the orbit period is 2.3 hr and the maximum occultation durations by Europa are 33% of the orbit period. For a 100 km altitude orbit, the orbit period is 2.1 hr, and occultations by Europa can last up to 37% of the orbit period depending on the orientation of the orbit. The primary constraints on the orbit orientation are the required inclination and nodal phase angle. With every Europa orbit around Jupiter (3.551 days), there is also an occultation by Jupiter that lasts 2.5 hr.

The frequency of thruster activity, whether for momentum wheel desaturation or for science orbit maintenance, directly impacts the orbit determination and associated gravity science. A trade exists between the frequency and total ΔV required for the maintenance maneuvers, with smaller, more frequent maneuvers potentially resulting in less ΔV overall. However the more frequent maneuvers may significantly degrade the ability to accurately reconstruct the orbit and gravity-field signatures. Preliminary analysis shows that orbit maintenance maneuvers would not be required any more often than once every week and momentum wheel desaturations no more than once per day. The precise elements for the science orbits and their associated orbit maintenance strategies would be studied further during development and ultimately refined during the first weeks in orbit around Europa.

The mission ends with the flight system in the science orbit at Europa. Due to third body effects on JEO's orbit, the ultimate disposition of the flight system would be eventual impact on the surface of Europa. It is this ultimate fate which drives the derived planetary protection requirement for sterilization.

OPERATIONAL SCENARIOS

Operations scenarios for the JEO concept are driven by prioritized science, mission design constraints, and early model payload designs that in turn drive refinements of the model payload, and design of the flight and ground systems.

Science objectives, investigations, and priorities for JEO are provided by the NASA/ESA SDT. The highest priorities focus on the Europa orbit science objectives and investigations with additional high priority objectives and investigations for Jupiter System science, based on slightly enhanced capabilities over those needed to achieve the Europa science goals.

The operations scenarios are based on incorporating key operations issues from the earliest concept studies. Some of these issues include:

- Make the flight and ground systems operable and maintainable for high intensity, rapid turn-around operations in Europa orbit in the possible presence of radiation based anomalies
- Use modern system engineering methods to model the system behavior as early as possible to balance mission scope with system capability, complexity, risk, and cost
- Use lessons learned from previous similar missions to guide design philosophy and trade studies.

The most stringent and driving operational requirements and constraints for the JEO concept are derived from Europa Science phase needs. Analysis and design was undertaken to determine additional requirements and constraints for operating in the Jovian Tour phase of the mission as well.

Jovian Tour

Measurements supporting satellite specific objectives would be accomplished during the satellite flyby encounters. Flyby geometries are highly varied for latitude and lighting but are opportunistic as the trajectory is optimized for arriving at Europa within allocations for duration, ΔV and radiation dose while also meeting the tour science requirements. The orbiter would be able to collect about 14 Gigabits of science data during the closest approach 1–2 hours for each encounter. This would enable NAC, MAC, UVS, and VIRIS observations, TI profiles, and altitude permitting, laser altimeter profiles and IPR full and low rate profiles.

Generally, early observations 30 to 60 minutes before and after closest approach collect global views at moderate to low resolution. Imaging observations are limited to the lit limb and thermal profiles in dark regions. Observations near closest approach have higher resolution but reduced image extent. Analyses for data volume accumulation, orbiter velocity and ground speed, orbiter altitude and sun phase angle are used in developing each flyby scenario.

Monitoring and measurement of the system plasma environment and magnetosphere would be accomplished through continuous data collection from the magnetometer and PPI instruments. Jupiter atmospheric and Io monitoring would make use of the 9-color NAC with detailed observations and dynamic studies every week or two.

High level scenario analysis shows that large numbers of monitoring images could be collected to support observations of Jupiter's atmosphere both globally with MAC, VIRIS, UVS, and TI and the periodic tracking of hundreds of features with the 9 color NAC. Because the large capacity SSR allows many observations to be collected over a short period of time, dynamic observations are possible (e.g., movies) even in conjunction with other observing activities such as Io monitoring. Figure 10 shows an example analysis of Jupiter monitoring from 1.4 million km. This case occurs twice per Jupiter orbit and shows good sunlit viewing at a variety of close ranges and phase angles. For ranges greater than twice perijove, observing conditions are very good for tracking dynamic features in Jupiter's atmosphere. The table included in the figure shows that basic views of Jupiter including composition data, and multicolor images of hundreds of features are possible. Many of the images can be collected in the form of movies to examine dynamic structures at high resolutions.

Early Jovian Tour sequences would last one to two months with special short term sequences developed for flybys. DSN tracking would be normally one 8 hour 34 m pass per day. Near flybys, additional 34 m passes would be scheduled for increased data return and 70 m passes, or equivalent, for key engineering telemetry and for contingency operations. Tracking would increase to nearly continuous levels in the month prior to EOI to support final navigation targeting and prepare for Europa science operations. The final month prior to EOI would have two close flybys of Europa, setting up the geometry for EOI.

Europa Science

The earliest and highest priority objectives would be accomplished during Europa Campaign 1, including 2 global maps, 1–2 degree global grids from the 4 profiling instruments, and several hundred coordinated targets with multiple instruments, in highest resolution modes, of high interest sites. After the initial campaign, the orbit altitude would be lowered and higher resolution global maps, additional profile grids and hundreds more coordinated target observations would be collected to answer regional process questions. Figure 5 shows an example view of Europa with the Europa Campaign 1 Science orbit and a Cartesian map of Europa showing that global coverage with the color wide angle camera is possible in the first 3 eurosols (~11 days).

For Europa Campaigns 1 and 2, science data collection is continuous and repetitive with continuous fields and particles, altimetry, and TI profile data collection, along with alternating orbit radar sounding and global imaging. On orbits when additional data volume is available, targeted data acquisitions comprising either coordinated targets (IPR profiles, NAC, MAC and VIRIS images) or full resolution IPR observations would be collected. Figure 6 shows an example of the ground tracks in Europa Campaign 1 with an expanded view of a coordinated target overlaid. Except for the low rate instruments, all observations would be taken when Earth is in view, enabling rapid downlink of high volume science data. Sequences for repetitive mapping activities would be uplinked once per week. Lists of targets to be acquired via on-board targeting software,

would be developed and uplinked to the flight system every few days. Data return would be via continuous 34 m tracking through the end of Europa Campaign 3. Data rates would be determined every orbit based on the DSN elevation angle and Jupiter radio (hot body) noise for that orbit. These variable data rates increase the average data volume returned by nearly 100% over traditional methods.

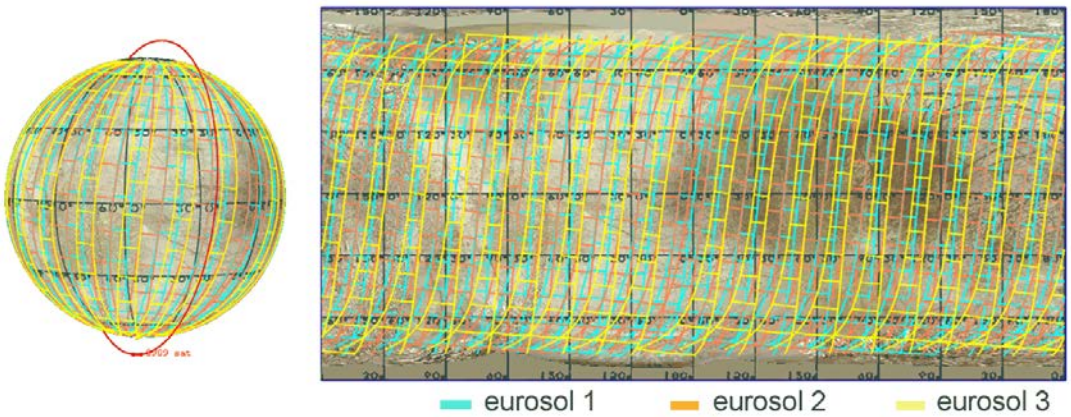

Figure 5. 200m Global Color Map Closes in 3 Eurosols (~11 days) in Europa Campaign 1

Europa Campaign 3 would have similar observing activities as the previous campaigns but the emphasis would shift from global mapping with limited targeted observations to primarily targeted observations with limited profiling and gap fill observations from the WAC.

Europa Campaign 4 would continue targeted observations but would include new observation activities not permitted in the first 3 campaigns. These might include off nadir imaging, Io and Jupiter monitoring, low altitude observing with imagers and INMS, and other observations designed in response to new questions arising from early observations.

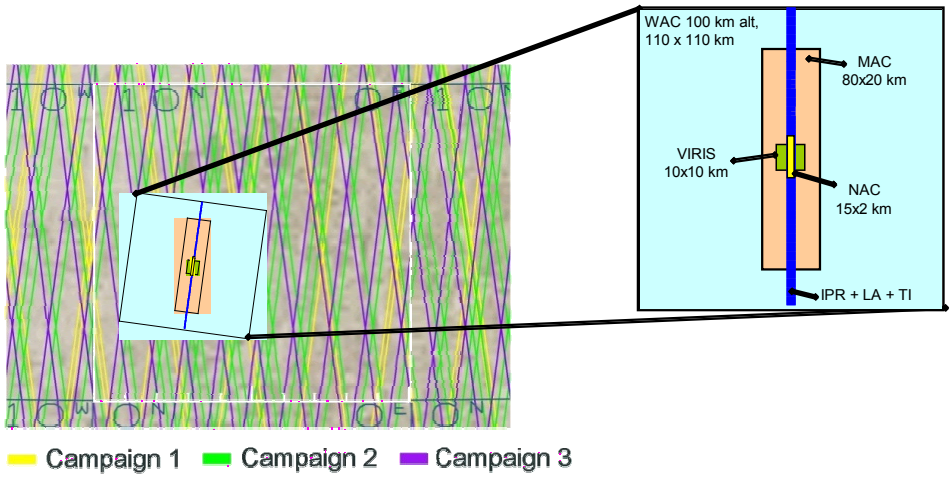

Figure 6. Coordinated Target Footprint and Groundtracks for Europa Campaigns 1-3

Science data collection during Europa Campaign 4 would be planned for daily 8 hour passes to DSN 34 m stations. Sequence durations would be increased to 2–4 weeks. Target updates would be uplinked once per week.

Science Data Return

During the Jovian Tour phase, the 17 Gb hybrid SSR would allow rapid data collection at faster rates than the downlink rate. Days of downlink could be stored allowing the possibility of data retransmission in the event of a missed DSN pass, weather outage, link noise or orbiter safing.

Science observations and data downlink would largely be decoupled through the use of the gimbaled high gain antenna. Data volume would be allocated and factored into science sequences. Margins and flexible sequencing strategies would allow DSN track times to change without disrupting science observations. With time to process and SSR volume to work with, data reduction techniques such as windowing or selective downlink become possible.

The SSR would function as a short term buffer for data acquired while the flight system communications are occulted by Jupiter or Europa or when data is collected at aggregate rates exceeding the downlink rate. It is assumed, for planning purposes, that the 16 Gb SDRAM partition of the SSR would have failed due to radiation effects by start of the Europa Science phase.

For most orbits during the Europa Science phase, 10–15% of the 1 Gb CRAM SSR science partition would be needed for storing data from the continuously operating instruments while in occultation. Most repetitive mapping data would be collected while in view of the Earth and downlinked in near-real-time. A few times per day, up to once per orbit, a coordinated target observation would be collected and stored in the SSR. The target observation sizes are constrained to fit, with margin, into the SSR. For the most part, data collected would be downlinked in the order collected. No facility for re-transmission, data editing, or for accommodating long DSN gaps is possible. The science objectives are systematic and repetitive. Observations needed to achieve the science goals would be rescheduled in the event of lost downlink time. Figure 7 shows the total data downlink capability during the Jovian tour and Europa science orbit phases. The average daily data rates for the science mission are shown in Figure 8. As discussed in the flight system overview, the link analysis assumes optimization of the link for Jupiter system noise

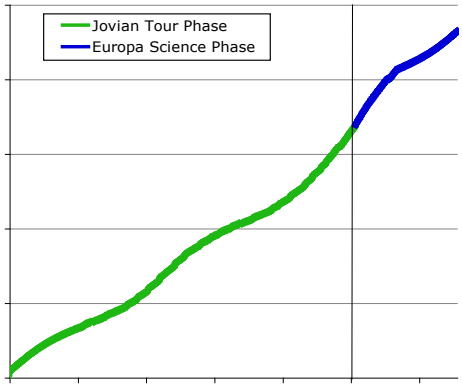

Figure 7. Conceptual Cumulative Data Volume Returned

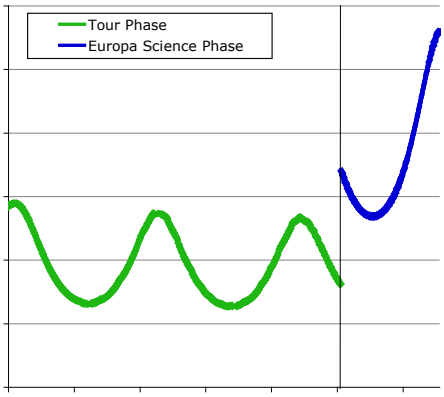

Figure 8. Average Data Rates for 34 m DSN Stations. Post EOI data return rate is based upon dynamic rate simulations.

and DSN elevation (dynamic rate simulation) during the downlink portion of each orbit.

CONCLUSION

The 2008 NASA JEO study focused on refining the NASA mission concept and reducing risk. The JEO mission concept was reviewed and updated to incorporate additional Jupiter System science and to take advantage of technology maturation. The resulting concept provides an evolution from previous concepts that could provide scientists with a vast amount of information to address both the specific JEO goals and objectives and the highest priority Decadal Survey science. The model payload described herein takes advantage of publicly available information allowing innovative or proprietary concepts to enhance mission capabilities.

The Europa science phase scenarios and orbit design were largely unchanged from the 2007 Europa Explorer study and drew upon mission design experience gained from all of the previous studies. Science priorities and observing needs were balanced with operations scenarios, flight system capabilities and mission design constraints to arrive at an orbit design. The orbit design is shown to provide the necessary conditions to allow the instruments to achieve all science objectives, in priority order, with significant schedule and technical margins.

Future work would include refining the scenarios and orbit design (for the tour trajectory and Europa science orbits) for the payloads selected in a future NASA Announcement of Opportunity. In addition, future analysis would be undertaken to integrate designs for the transition from the tour trajectory, and EOI into the science orbit strategy.

ACKNOWLEDGMENTS

This research was carried out at the Jet Propulsion Laboratory, California Institute of Technology, under a contract with the National Aeronautics and Space Administration. The authors would like to acknowledge the hard work completed by all of the members of the international Joint Jupiter Science Definition Team, the NASA JEO study team, and the ESA JGO study team.

REFERENCES

[1] Clark, K. et al., "Return to Europa: Overview of the Jupiter Europa Orbiter Mission," 2009 IEEE Aerospace Conference Proceedings, March 14-18, 2009.

[2] "Jupiter Europa Orbiter Mission Study 2008: Final Report," NASA Report, Task Order #NMO710851, January 2009. (http://opfm.jpl.nasa.gov/library)

[3] "Europa Jupiter System Mission – Joint Summary Report," NASA-ESA Report, Joint Science Definition Team, January 2009. (http://opfm.jpl.nasa.gov/library)

[4] Lock, R., R.T. Pappalardo, and K. B. Clark. "Europa Explorer operational scenarios development," SpaceOps 2008 Conference, AIAA 2008-3307, CD-ROM, 2008.

[5] Petropoulos, A.E., Kloster, K.W., and Landau, D.F., "Mission Design for the Jupiter Europa Orbiter Flagship Mission Study," Paper AAS 09-354, AAS/AIAA Astrodynamics Specialist Conference, Pittsburgh, Pennsylvania, 10-13 Aug, 2009.

[6] Kloster, K.W., Petropoulos, A.E., and Longuski, J.M., "Europa Orbiter Mission Design with Io Gravity Assists," Paper AAS 09-353, AAS/AIAA Astrodynamics Specialist Conference, Pittsburgh, Pennsylvania, 10-13 Aug, 2009.

[7] Lara, M., Russell, R. P., "Computation of a Science Orbit about Europa," Journal of Guidance, Control, and Dynamics. Vol. 30, No. 1, 2007, pp. 259-263.