International Conference on Environmental Systems

AIAA
The World's Forum for Aerospace Leadership

An Active Heat Rejection Radiator with Digital Turn-Down Capability

Eric Sunada, Gajanana C. Birur, Gani B. Ganapathi, Jennifer Miller, Daniel Berisford
Jet Propulsion Laboratory/California Institute of Technology

Ryan Stephan
NASA Johnson Space Center

40th ICES, 11–15 July 2010, Barcelona, Spain

NASA JPL

Presentation Slides

- Landscape Format
- Minimum of information on each slide
  - Highlight main points
  - Use photos, charts, graphs
- No commercialism/advertising

Radiators for the Altair Lunar Lander

Ares V Earth Departure Stage

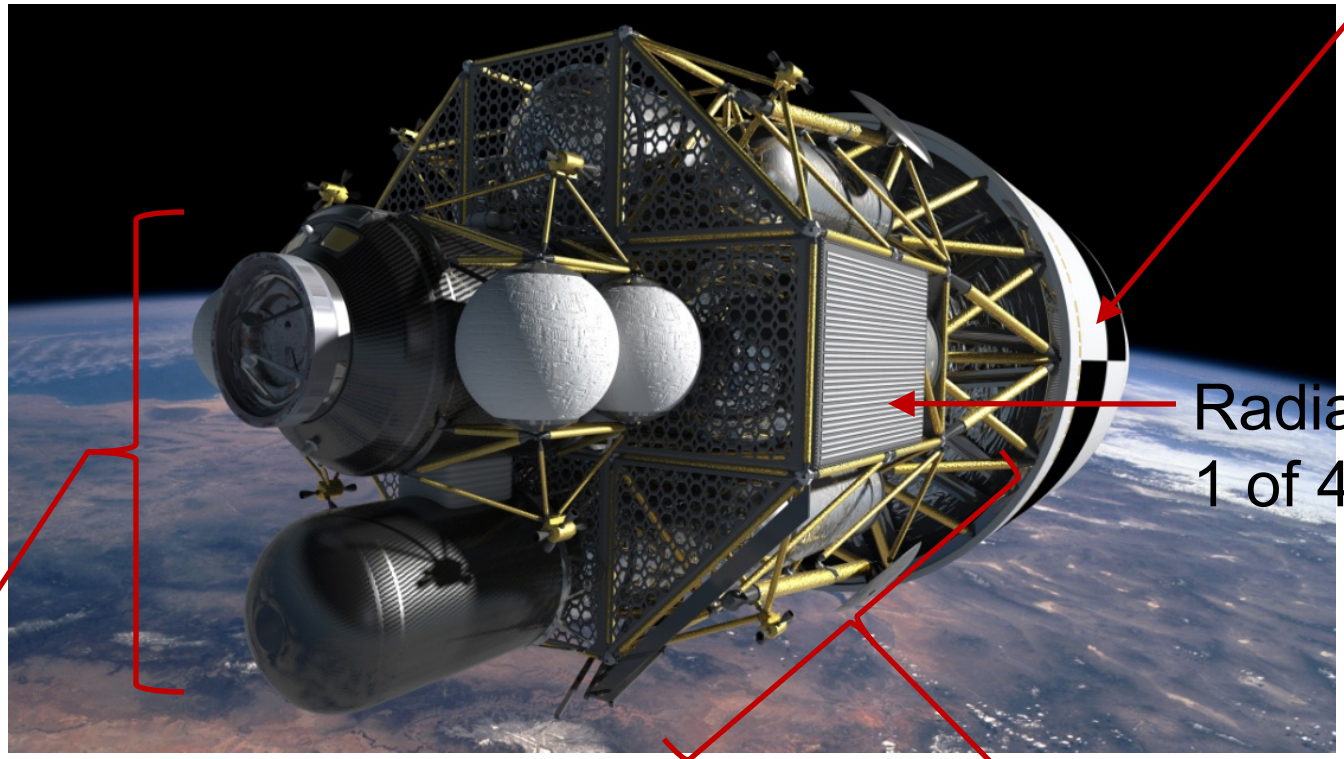

Radiator Panel
1 of 4

http://www.nasa.gov/mission_pages/constellation/altair/index.html

Descent Stage

Ascent Stage

Altair Mission Profile

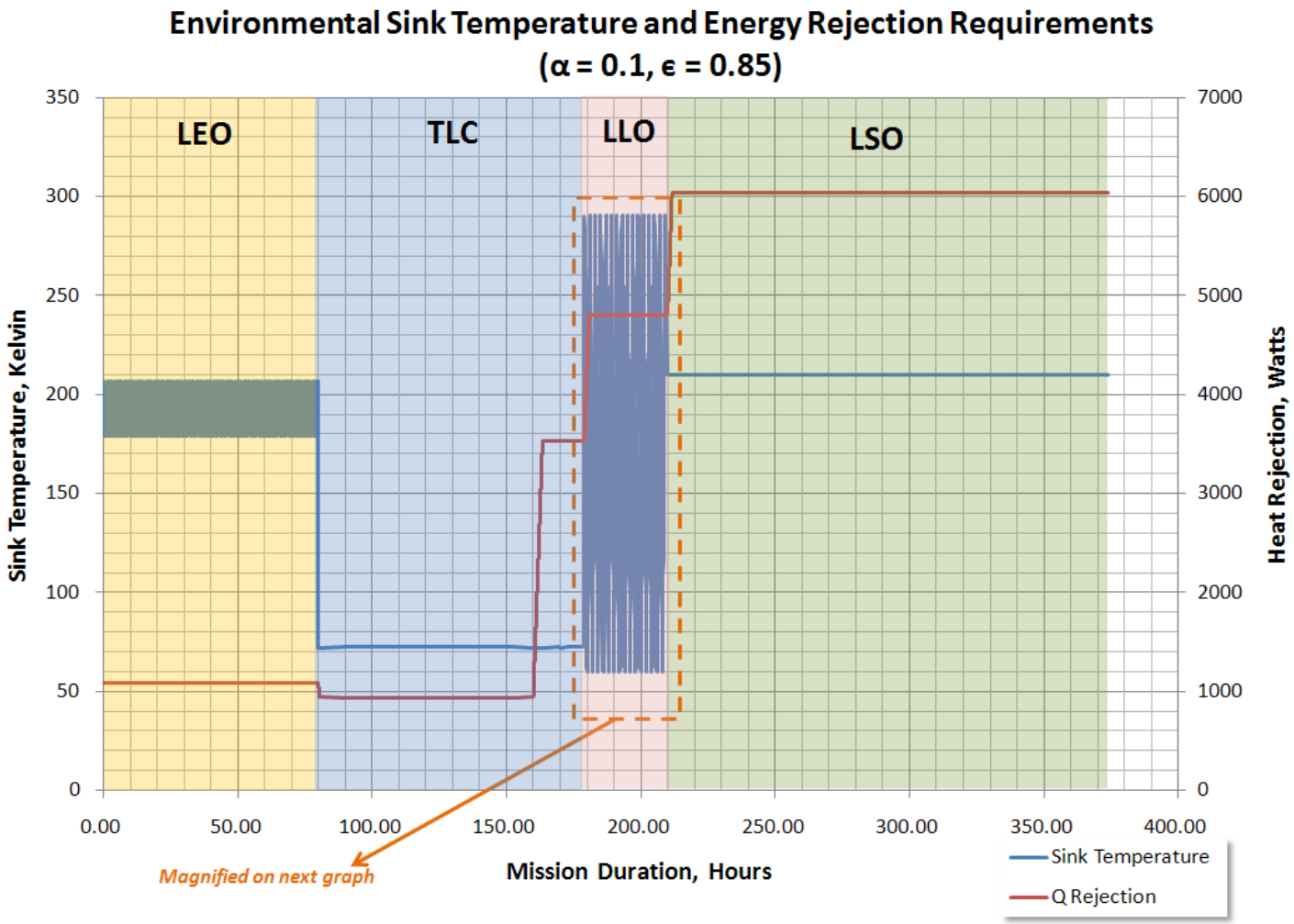

Courtesy of Rubik Sheth, NASA Johnson Space Center

Altair Low Lunar Orbit Environment

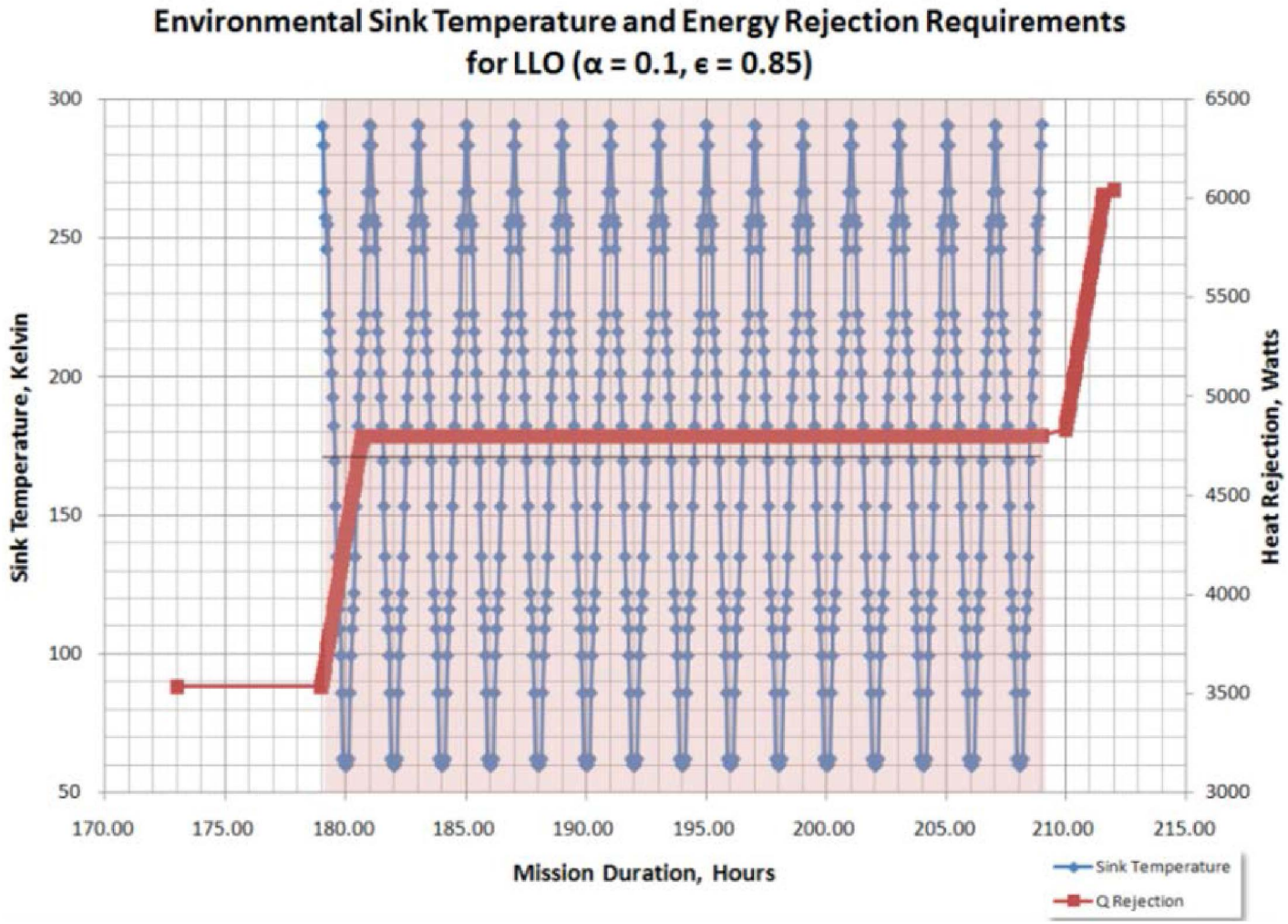

Technology Need

- **Single loop system** is desirable for mass savings
- Compatibility and toxicity requirements have resulted in **inhibited propylene glycol** as the baselined working fluid
- **Minimum sink temperature** occurs **during minimum heat dissipation** (trans-lunar cruise)
- **Maximum** steady-state **sink temperature** occurs **during maximum heat dissipation** (lunar surface operations)
- **Maintain inlet fluid temperature at 10°C** for cabin and payload thermal control

Radiator Turn-Down Capability is Needed

General Concept for a Digital Radiator

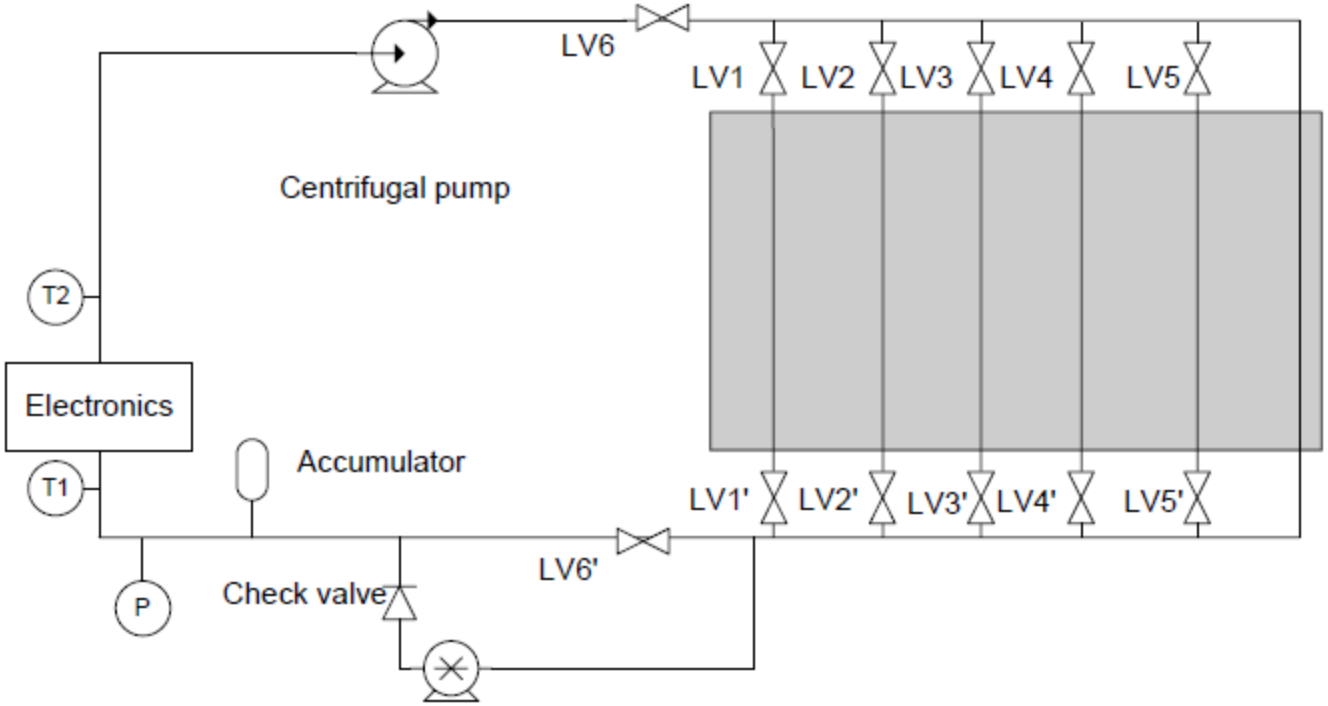

Example DR Turn-Down Scenario

Initial State: entire radiator being utilized (all branches open)

Step 1: Bypass flow

Step 2: Isolate radiator from remaining system with LV6 and LV6' and close all branch valves LV1, LV1' to LV5,LV5'

Step 3: Open lower latch valve LV5'

Step 4: Turn on gear pump to evacuate last branch. In this process all the fluid upstream (manifold) and downstream of LV5 as well as the fluid in the "always on" branch will be evacuated.

Step 5: Close LV5' and open all other latch valves, except LV5 (which isolates the unwanted branch only).

Step 6: Return flow to radiator.

The check valve downstream of the gear pump prevents backflow of the fluid during evacuation of lines.

The variable heat rejection state changes will be controlled by the flight software which can be programmed to include fault protection as well.

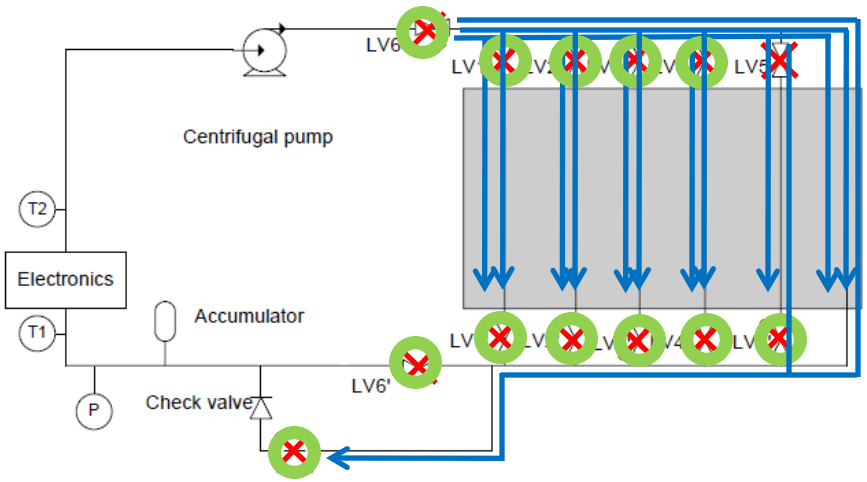

Development Needs

- Cannot evacuate flow paths sufficiently to mitigate freezing risks
  - Original concept did not provide a means to maintain NPSH for the drain pump
- Cannot hold set-point during turn-down
  - Original concept required entire panel to be bypassed during turn-down process

Tube Evacuation Options

Option	Drain Method	Description
1	CO_2 injection behind fluid column	A pressurant tank of CO_2 is used. Gas is injected just prior to activating drain pump. Gas provides driving pressure for fluid evacuation.
2	CO_2 dissolved in the working fluid	CO_2 is dissolved in the working fluid while at nominal operating pressures. Once the isolated leg's pressure is reduced upon drain pump activiation, CO_2 comes out of solution and helps to provide driving pressure for fluid evacuation.
3	Start-up heater used at start of the fluid column	Heat is applied at the end of the column furthest from the pump. Vapor is generated there upon pump activation and provides driving pressure for fluid evacuation.
4	Vent the fluid to space	The fluid is vented to space through a valve. Requires an upstream pressurant to ensure proper venting. Flight heritage on MPF and MER.

Notional flight configuration for Option 1: CO2 gas injection

Option	Drain Method	Description
1	CO_2 injection behind fluid column	A pressurant tank of CO_2 is used. Gas is injected just prior to activating drain pump. Gas provides driving pressure for fluid evacuation.

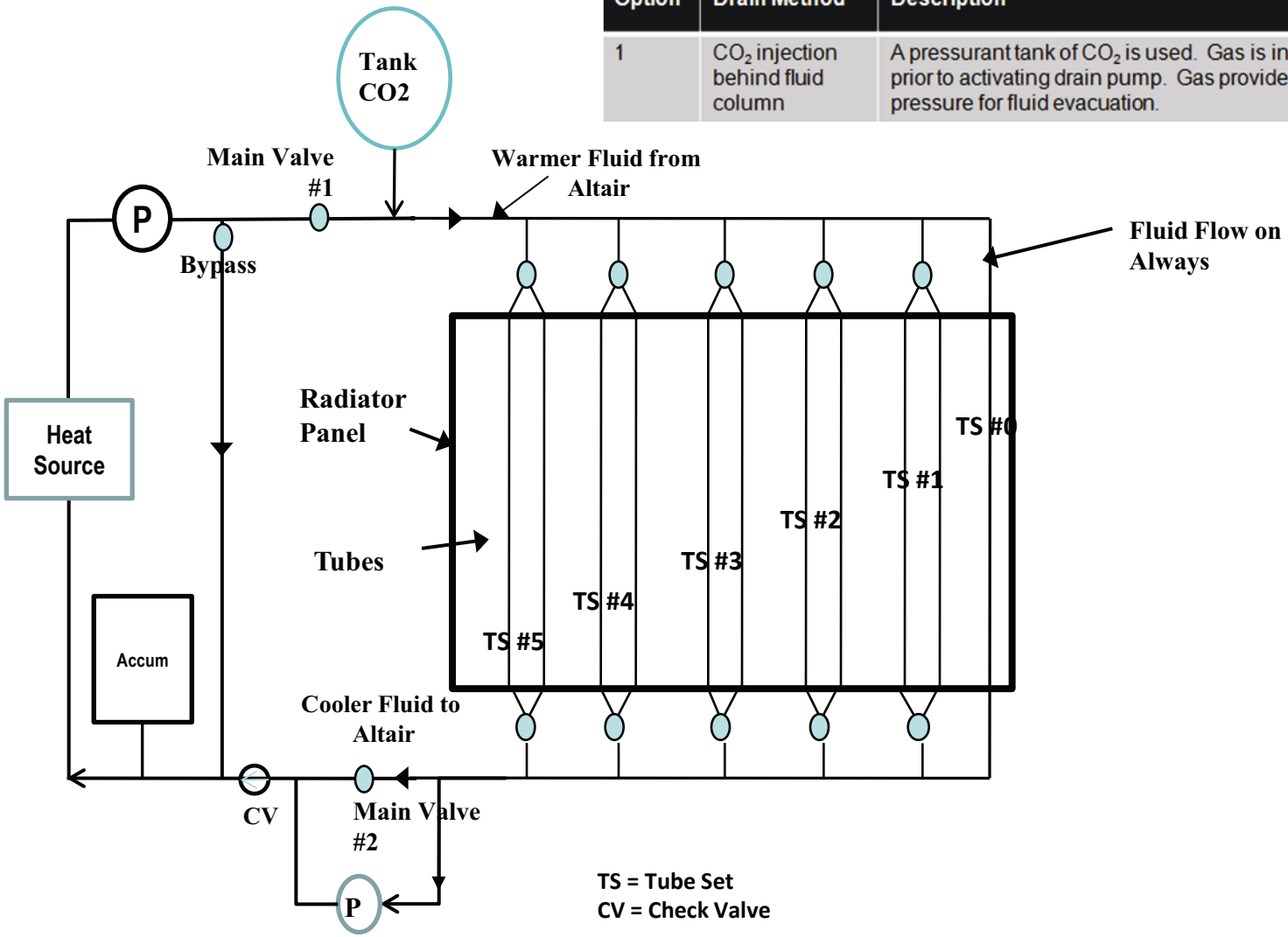

Small-scale Tube Evacuation Test Results: Option 1

- Inject CO_2 gas behind the fluid to provide positive pressure
  - CO_2 bubble injected at 10psi
  - About 90-95% of fluid rapidly drained

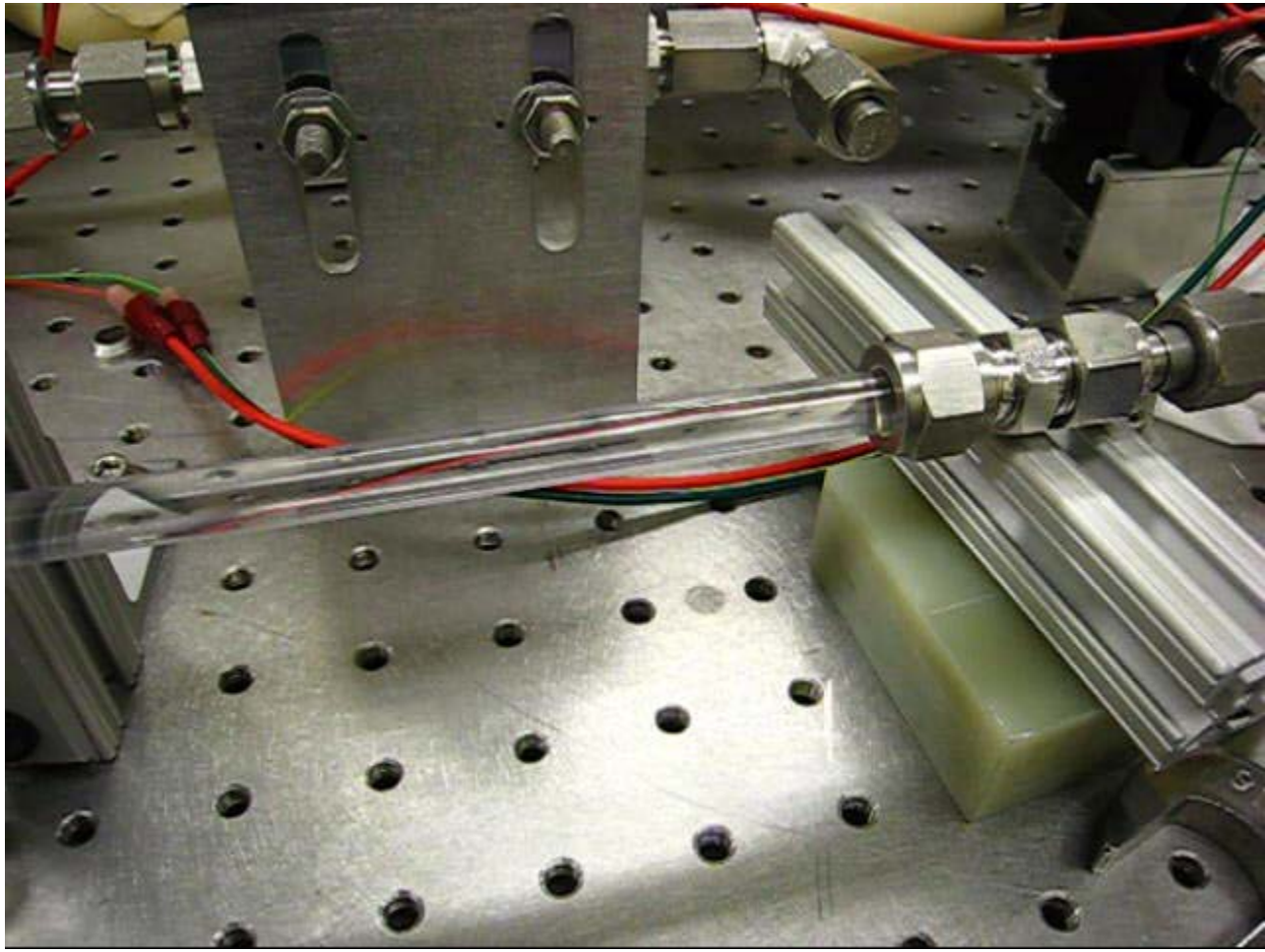

Small-scale Tube Evacuation Test Results: Option 2

- Dissolve CO_2 in the liquid which would then come out of solution once drain pump was turned on
  - CO_2 dissolved in water
  - No significant benefit to evacuation – inconsistent

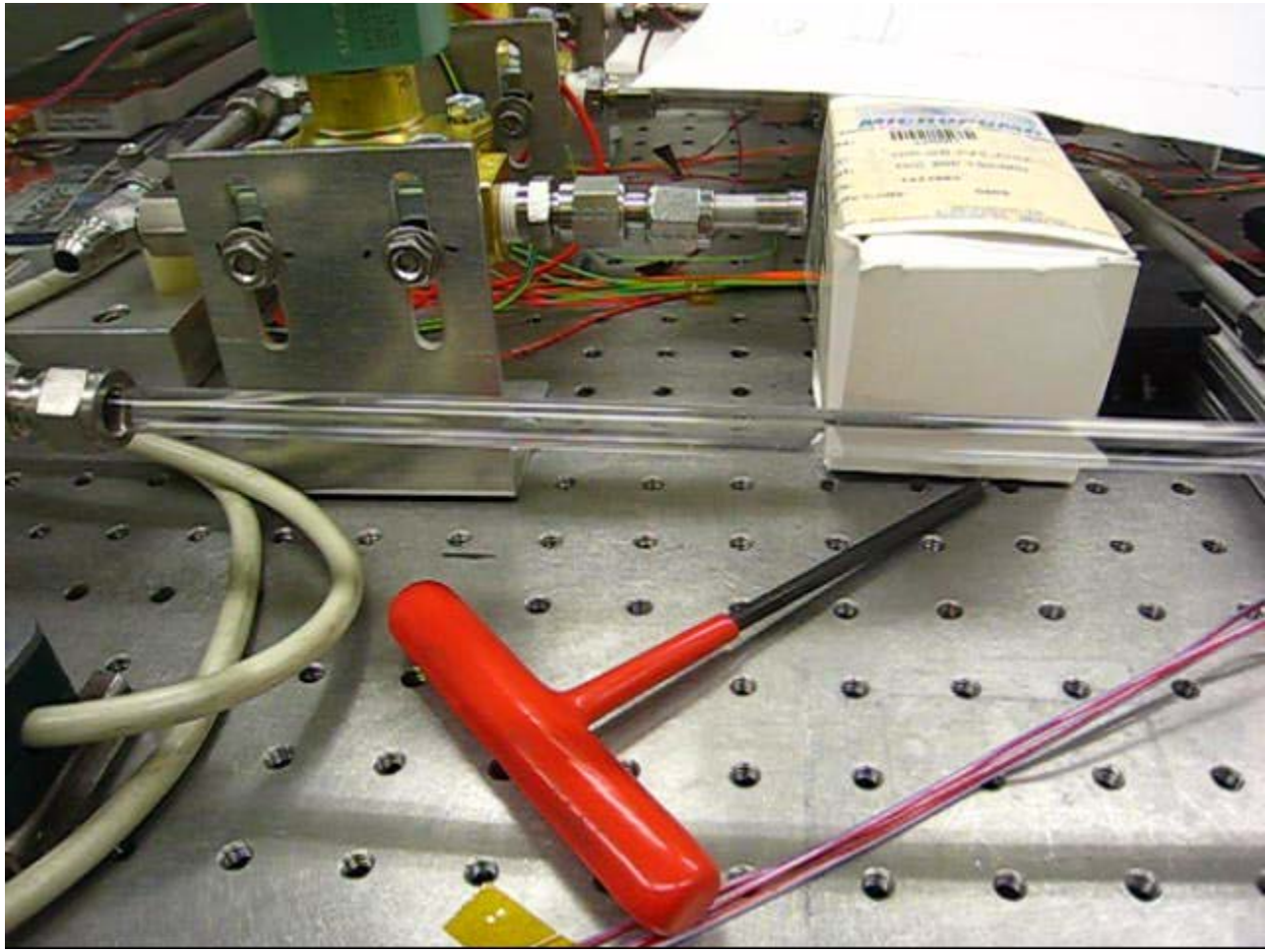

Notional flight configuration for Option 3: Start-Up Heater

3	Start-up heater used at start of the fluid column	Heat is applied at the end of the column furthest from the pump. Vapor is generated there upon pump activation and provides driving pressure for fluid evacuation.

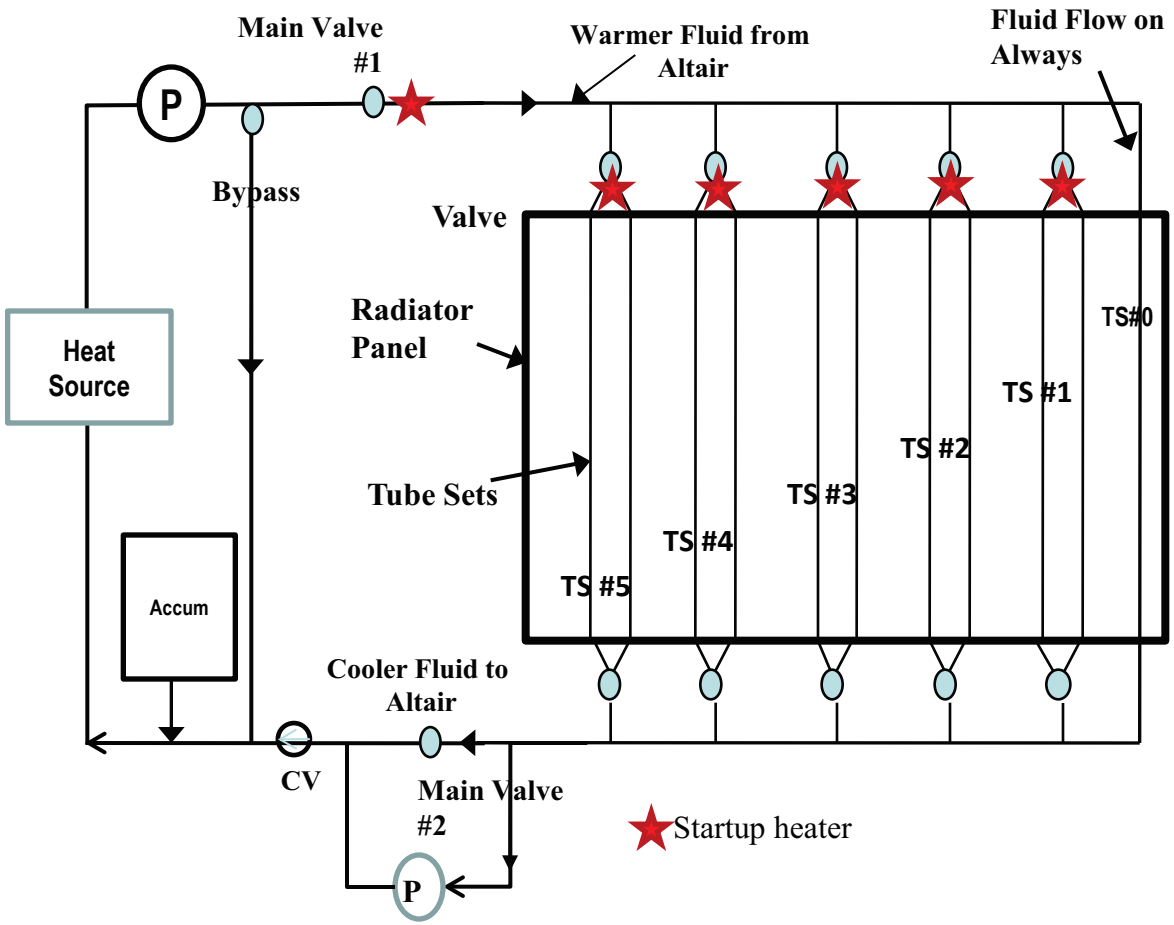

Small-scale Tube Evacuation Test Results: Option 3

- Heater to warm the fluid at the upstream end
- Vapor generated at that point would then provide driving pressure
  - 15 Watts applied for 30 seconds before pump start
  - About 95% of fluid successfully drained

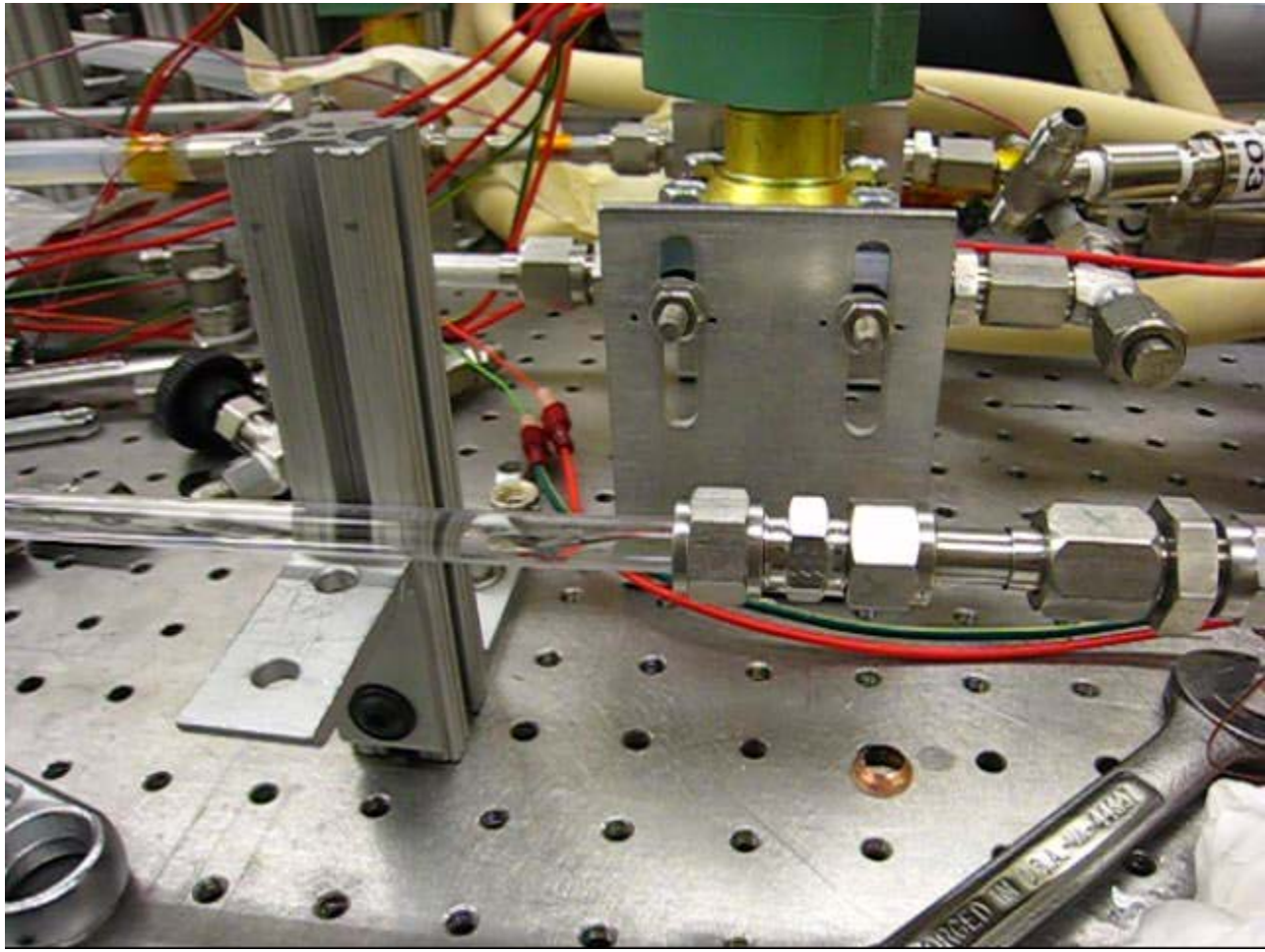

Notional flight configuration for Option 4: Vent Fluid to Space

4	Vent the fluid to space	The fluid is vented to space through a valve. Requires an upstream pressurant to ensure proper venting. Flight heritage on MPF and MER.

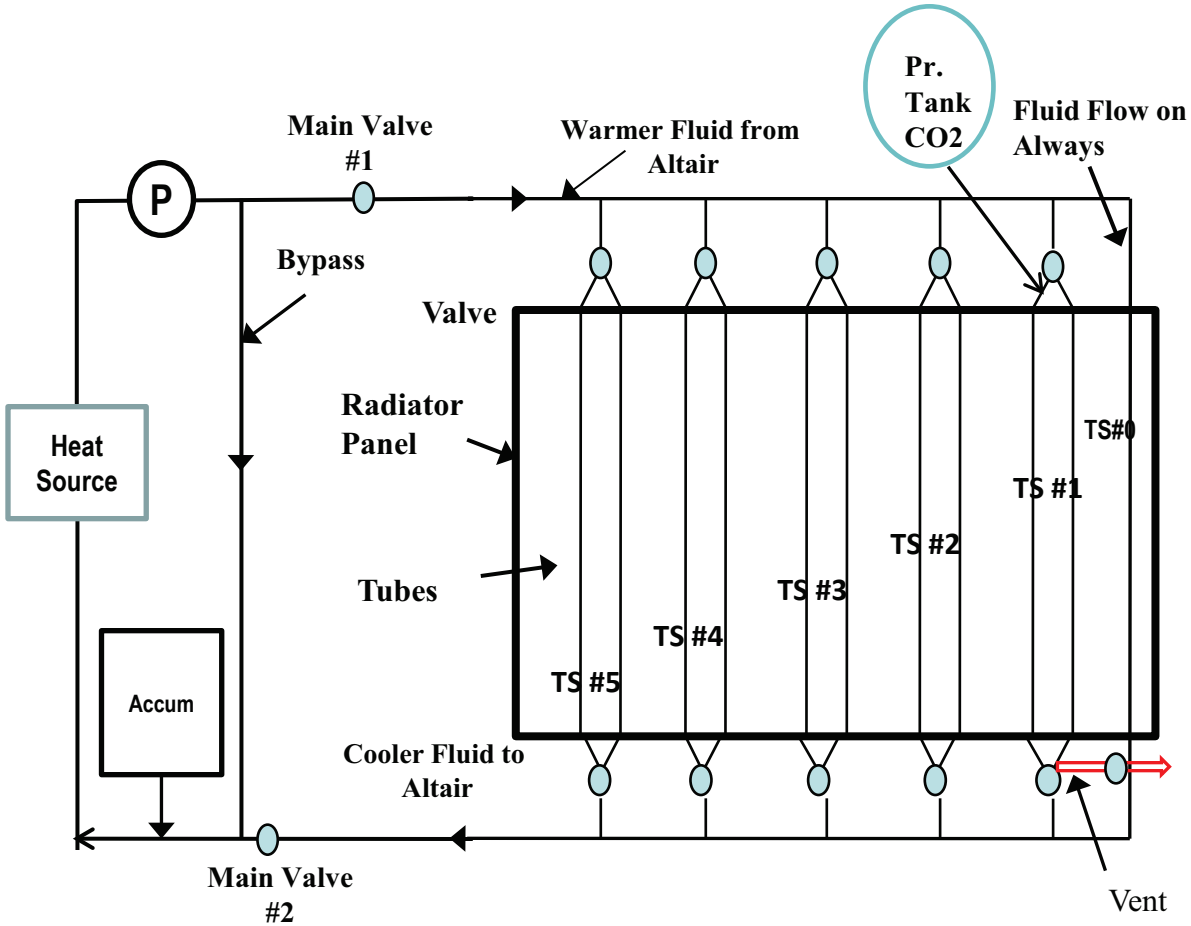

Option 5: Freezable leg with surrogate tube.

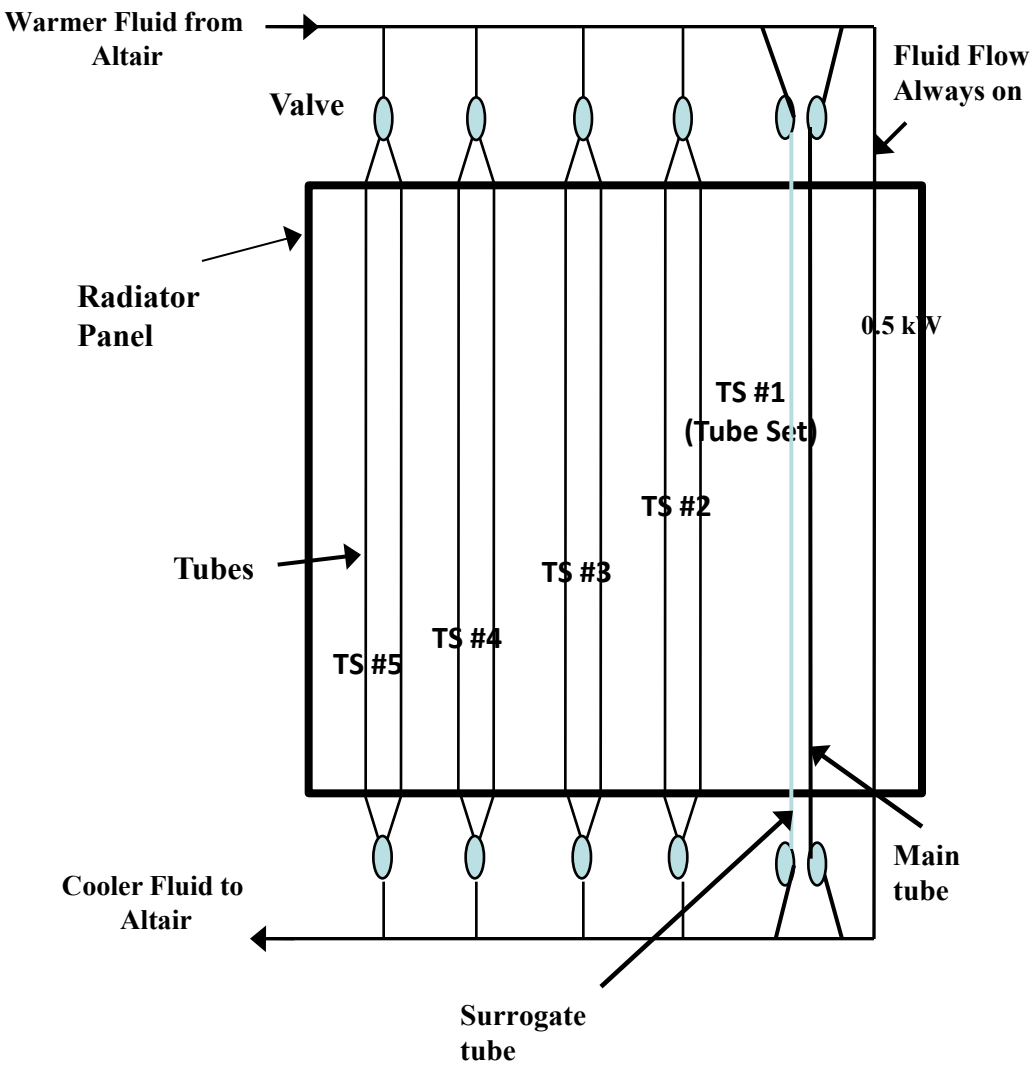

Trade-study summary for Digital Radiator configuration options

Performance Parameter	Baseline	Option 1	Option 2	Option 3	Option 4	Option 5
Configuration	Evac pump	Evac pump + CO_2 tank	Evac pump + dissolved CO_2	Evac pump + startup heater	CO_2 tank + vent valve to space	Surrogate tube and valve set
Mass	Heavy	Heavier	Heavy	Heavy	Heavy	Least Heavy
Mass for Altair config	120 kg	132 kg	120 kg	121 kg	123 kg	112 kg
Power	Nominal	Nominal	Nominal	Above nominal	Below nominal	Least power
Power for Altair config	20W for 5 minutes	20W for 5 minutes	20W for 5 minutes	20W for one minute + 20W for 5 minutes	10W for 1 minute	5W for 10 seconds
Reliability	Medium	Medium	Medium	Medium	High	Very High
Volume	Large	Large	Large	Large	Large	Smaller
Scalability	Yes	Yes	Yes	Yes	Yes	Yes
TRL	4	5	4 to 5	4 to 5	5	5
Flexibility	High	Not as high	High	High	Not as high	High only with mass increase
Comments	High amount of remnant fluid makes this option untenable	Material compatibility with dissolved CO_2 and its effect on main pump is TBD	Material compatibility with dissolved CO_2 and its effect on main pump is TBD	Requires a sufficient amount of heated fluid to displace tube volume	MPF, MER flight heritage	Each leg can be turned-up only once per surrogate tube

Selected Point Design

- Point design for full-scale radiator
  - Startup heater on dedicated stub for tube evacuation
  - 3-Way latch valve to allow evacuation while continuing to flow through remainder of panel
  - Number of evacuation pumps is TBD
  - Number of accumulators is TBD

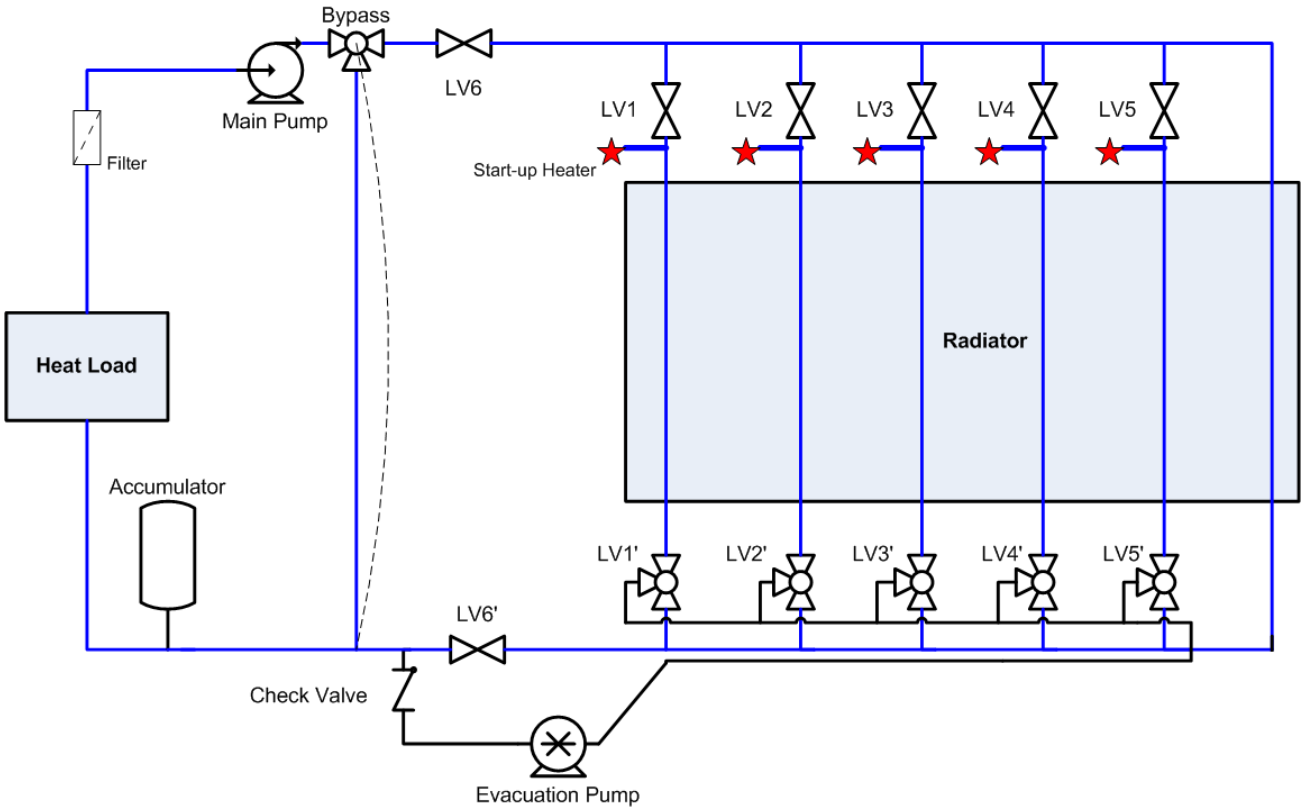

Example Turn-Down Scenario

Initial State: entire radiator being utilized (all branches open)

Step 1: FSW begins sequence for leg turn-down

Step 2: Close LV5 and redirect LV5' to Evacuation Pump

Step 2: Power start-up heater on Line 5

Step 3: Power on Evacuation Pump

Step 4: Power off start-up heater

Step 5: Power off Evacuation Pump after TBD

Step 6: Close LV5'

The check valve downstream of the gear pump prevents backflow of the fluid during evacuation of lines.

The variable heat rejection state changes will be controlled by the flight software

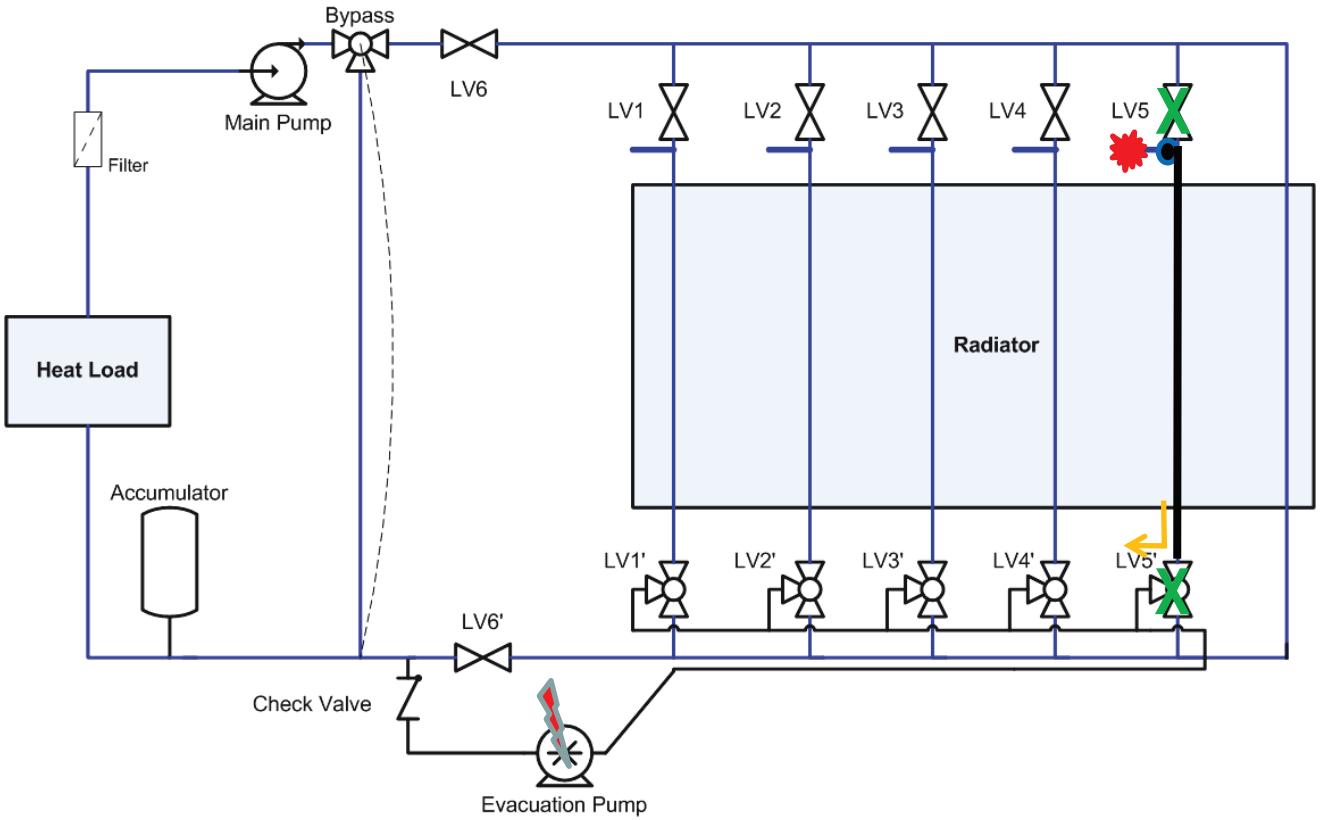

Digital Radiator System Model Description

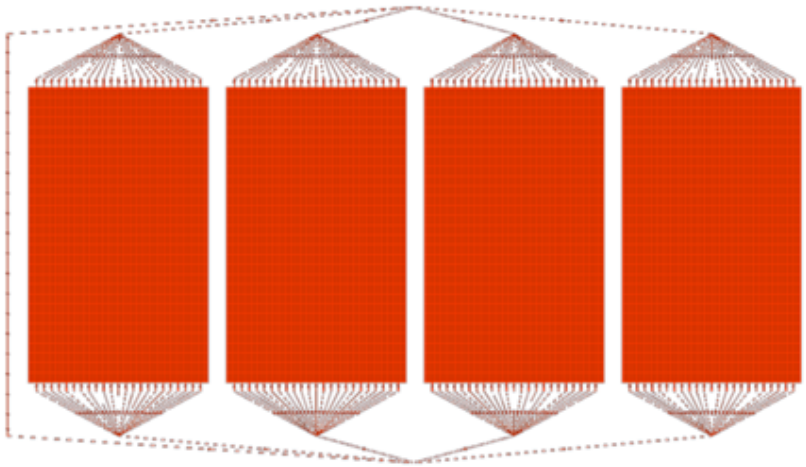

Four panels of 2m x 3.3m
in parallel with bypass line.

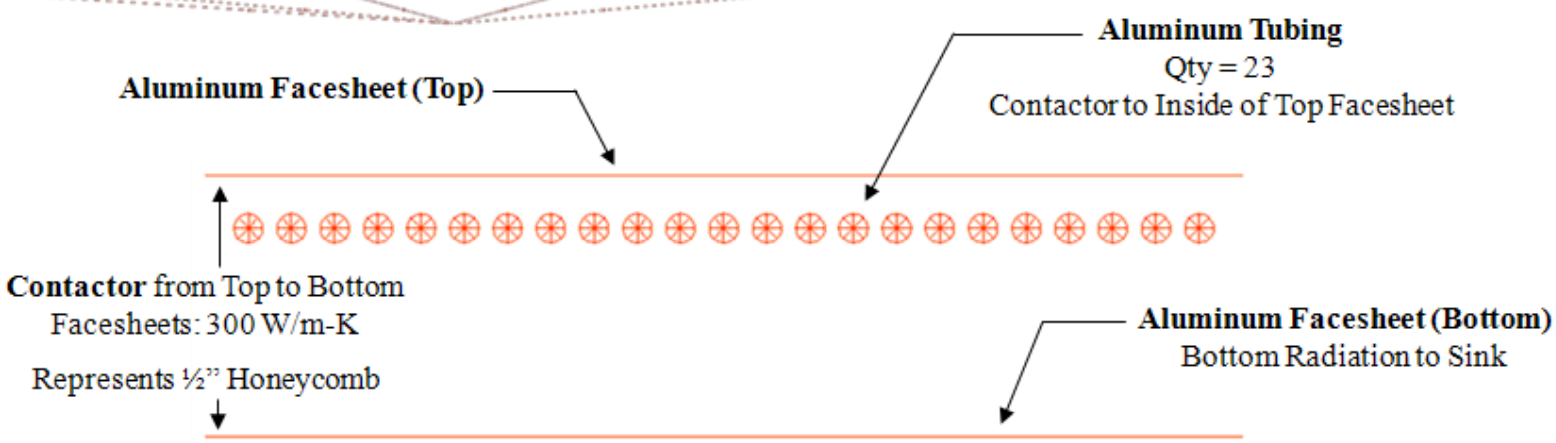

Digital Radiator Turn-Down States for the Altair Mission

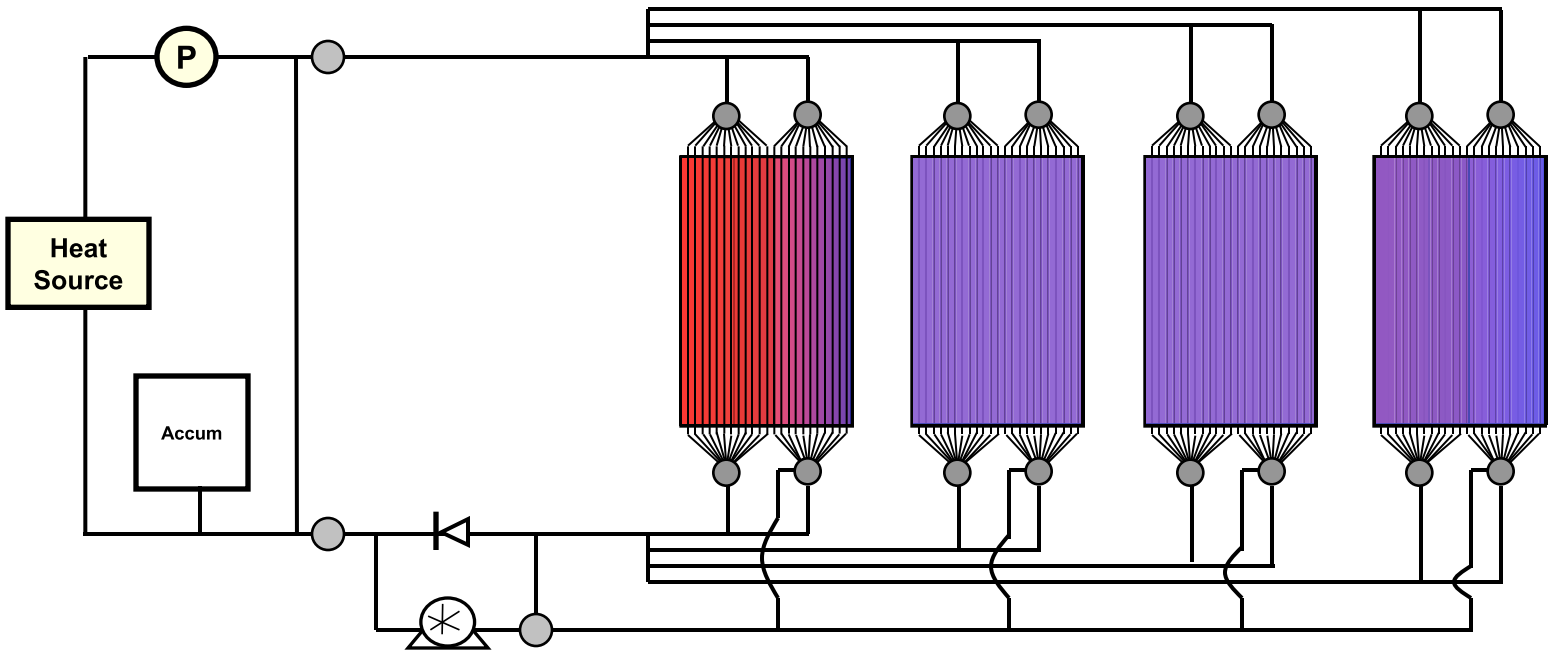

Low Earth Orbit: Qrej=1080W, Tsink=190K

T_{IN} = 288K

Total m_{DOT} = 0.058kg/s

Bypass
m_{DOT} = 0.049kg/s

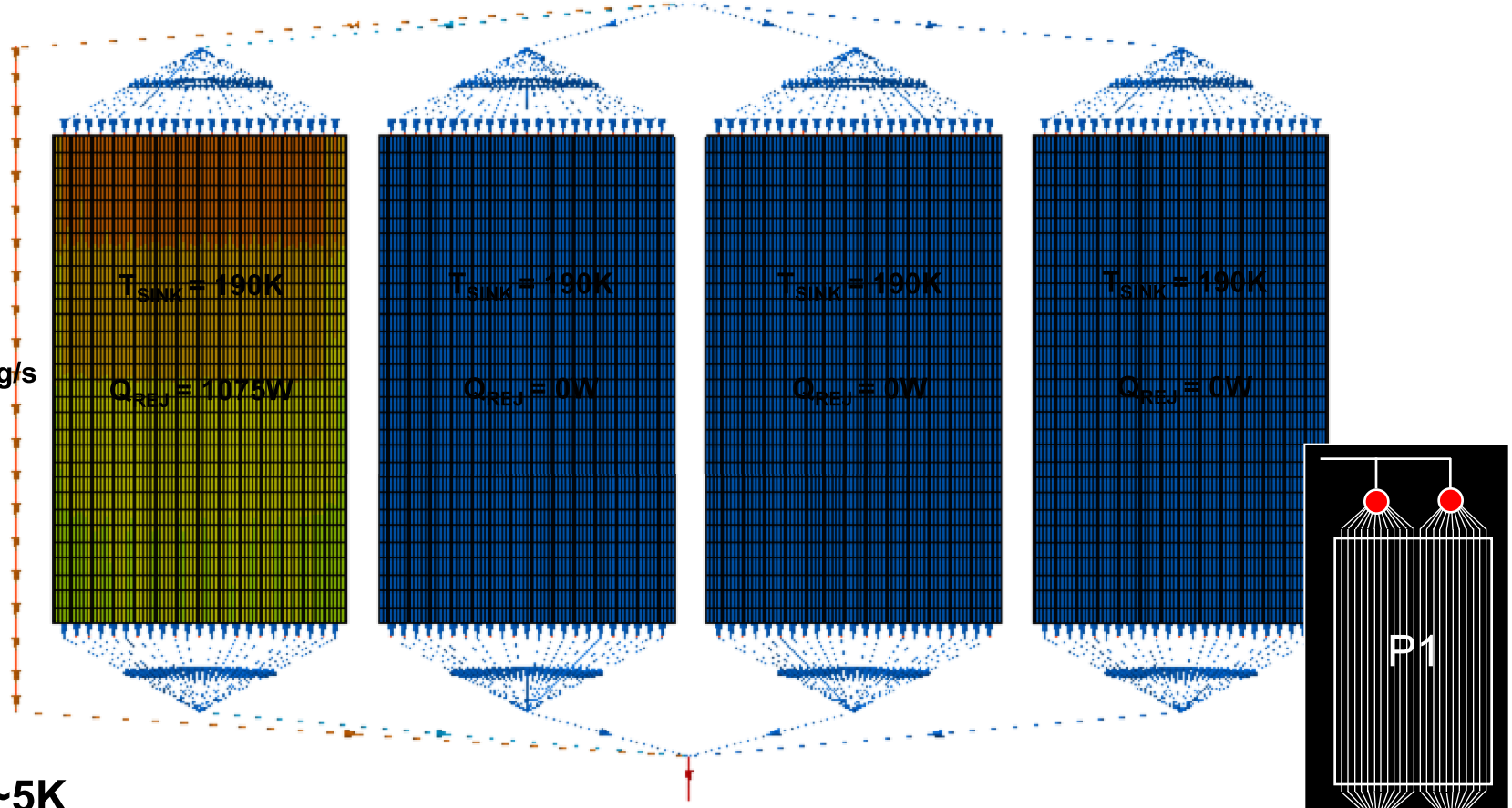

ΔT = ~5K

ΔP = ~3PSI

T_{OUT} = 282.7K

Total Q_{REJ} = 1075W

Trans-Lunar Coast: Qrej=936W, Tsink=72K

T_{IN} = 288K

Total m_{DOT} = 0.058kg/s

Bypass
m_{DOT} = 0.045kg/s

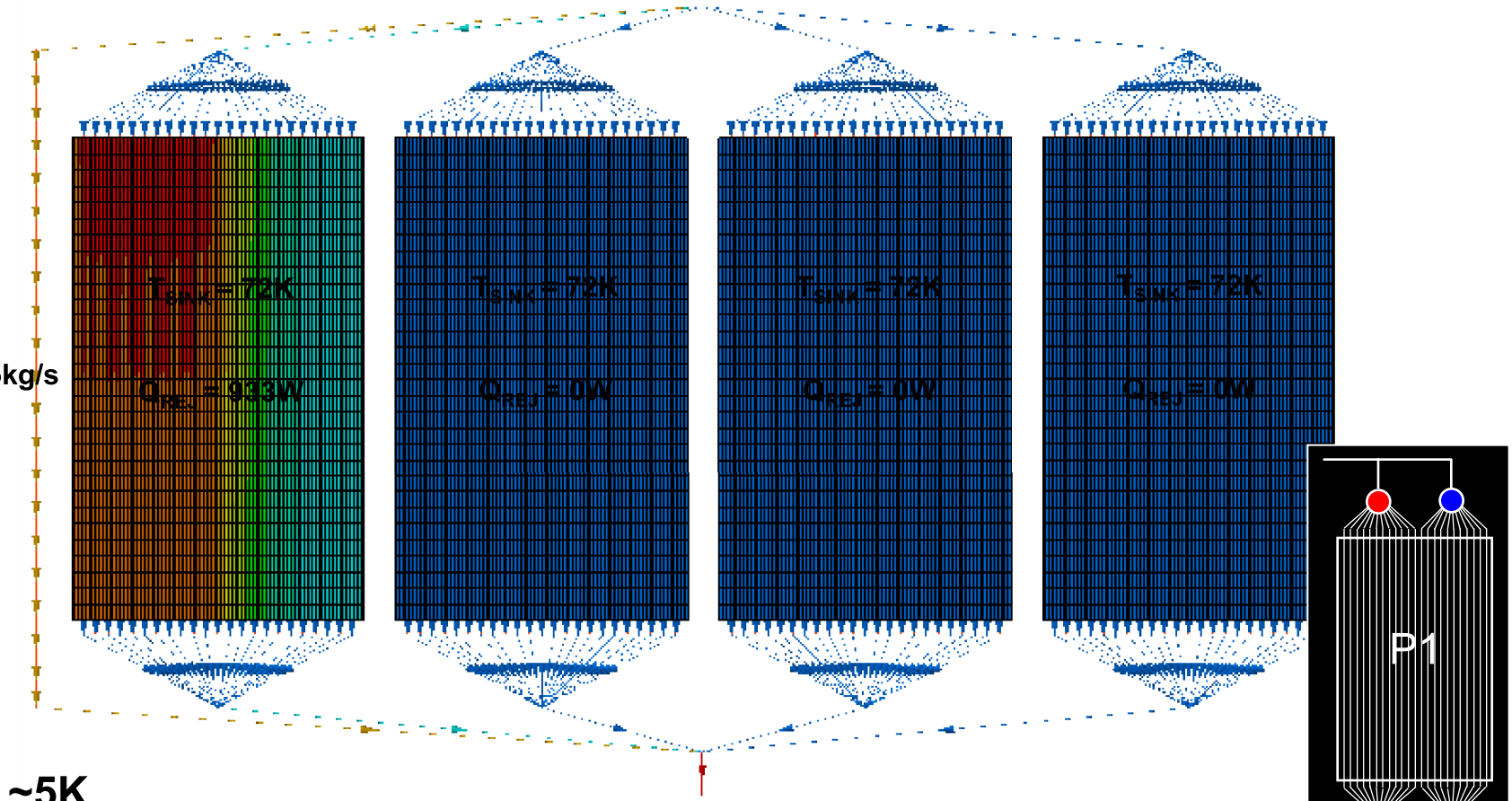

ΔT = ~5K

ΔP = ~5PSI

T_{OUT} = 283.4K

Total Q_{REJ} = 933W

pre-Low Lunar Orbit: Qrej=3535W, Tsink=72K

T_{IN} = 301K

Total m_{DOT} = 0.058kg/s

Bypass
m_{DOT} = 0.026kg/s

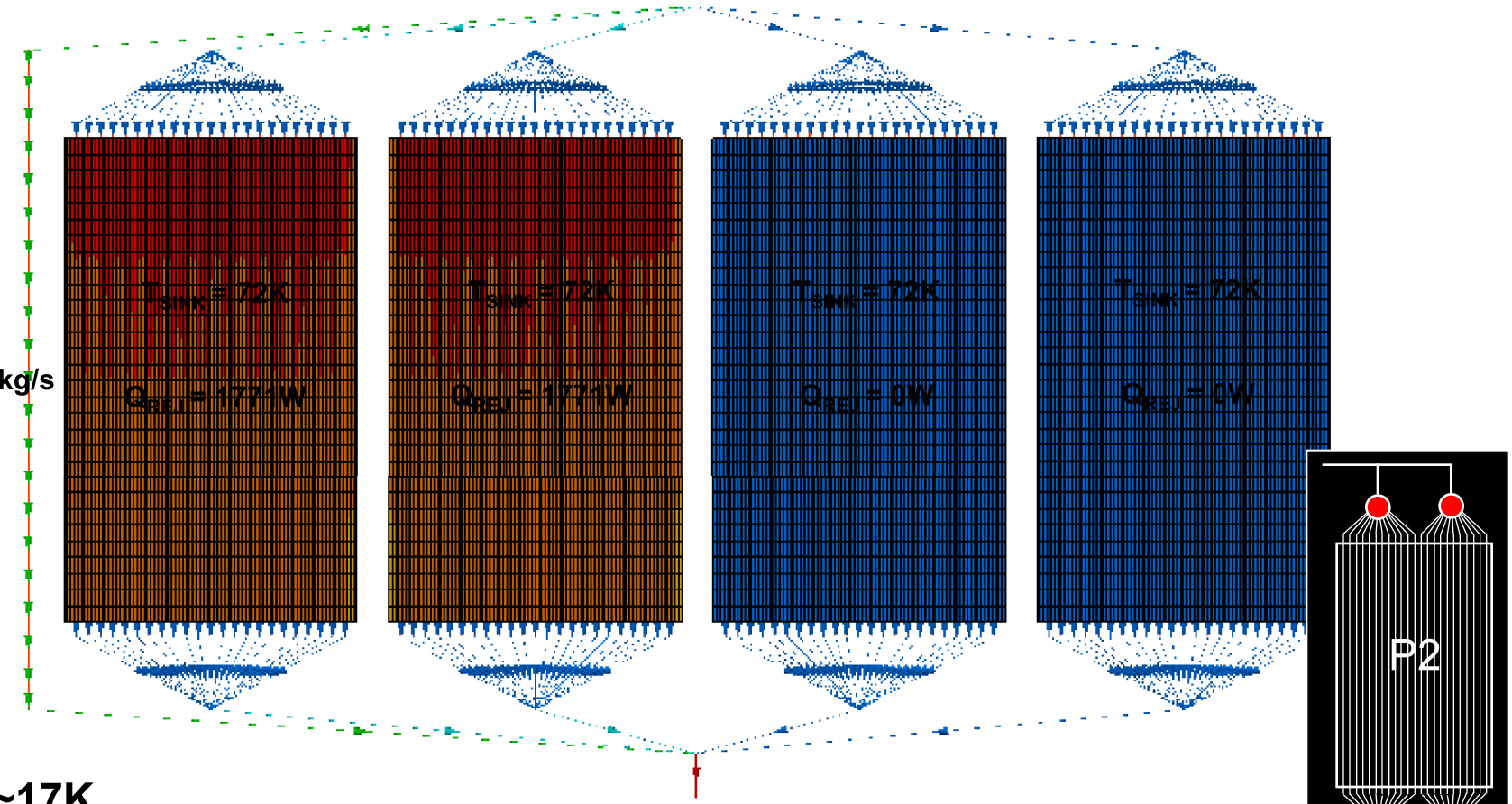

ΔT = ~17K

ΔP = ~3PSI

T_{OUT} = 283.8K

Total Q_{REJ} = 3542W

Low Lunar Orbit: Qrej=4800W, Tsink=222K

T_{IN} = 307K

Total m_{DOT} = 0.058kg/s

Bypass
m_{DOT} = 0.002kg/s

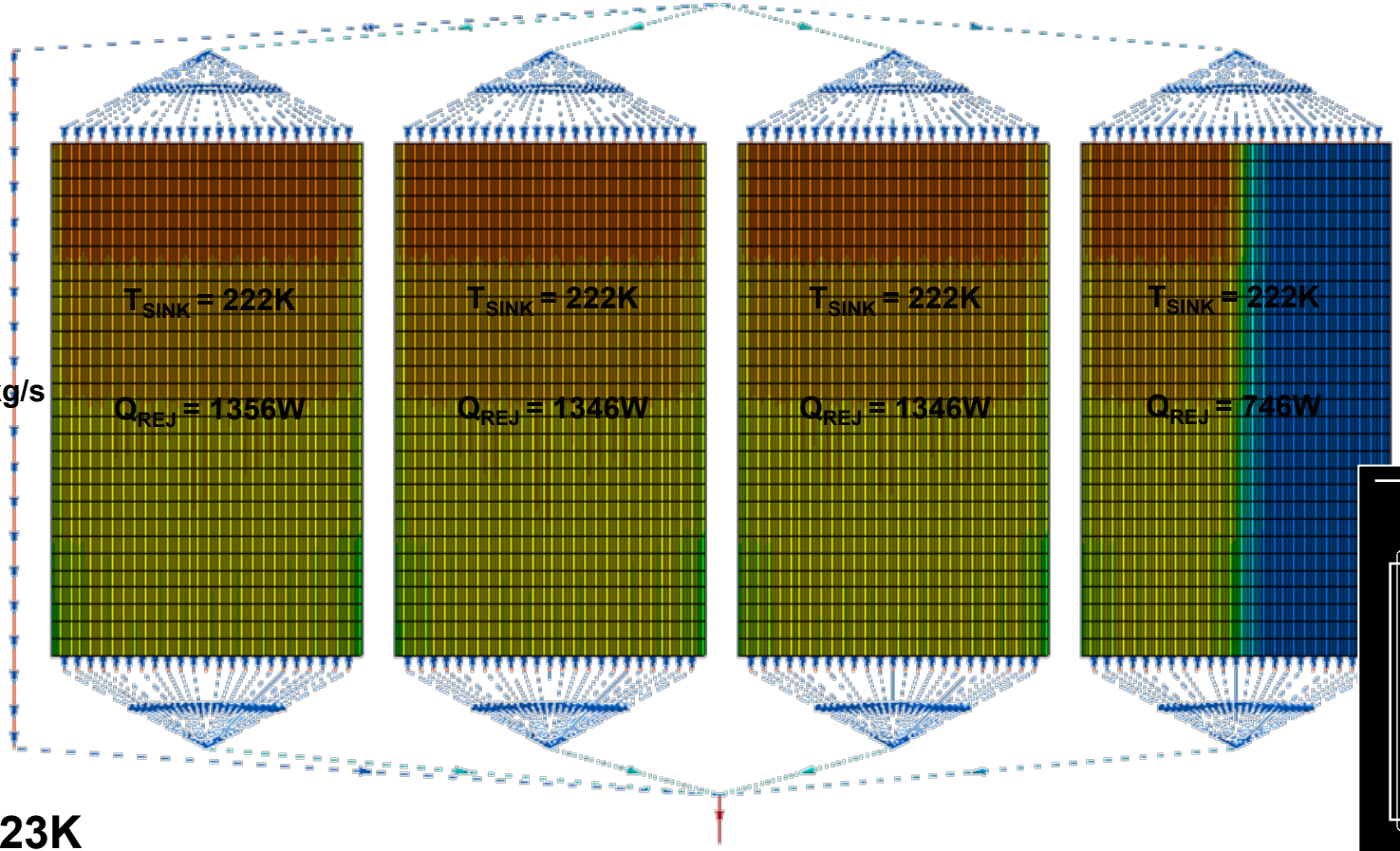

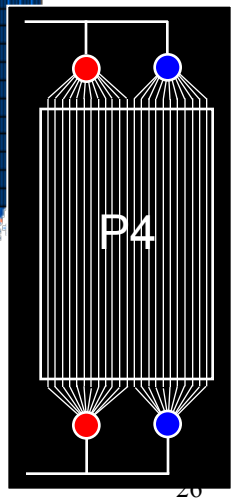

ΔT = ~23K

ΔP = ~1PSI

T_{OUT} = 283.7K

Total Q_{REJ} = 4814W

Lunar Surface Ops: Qrej=6200W, Tsink=210K

T_{IN} = 313K

Total m_{DOT} = 0.058kg/s

Bypass
m_{DOT} = 0kg/s

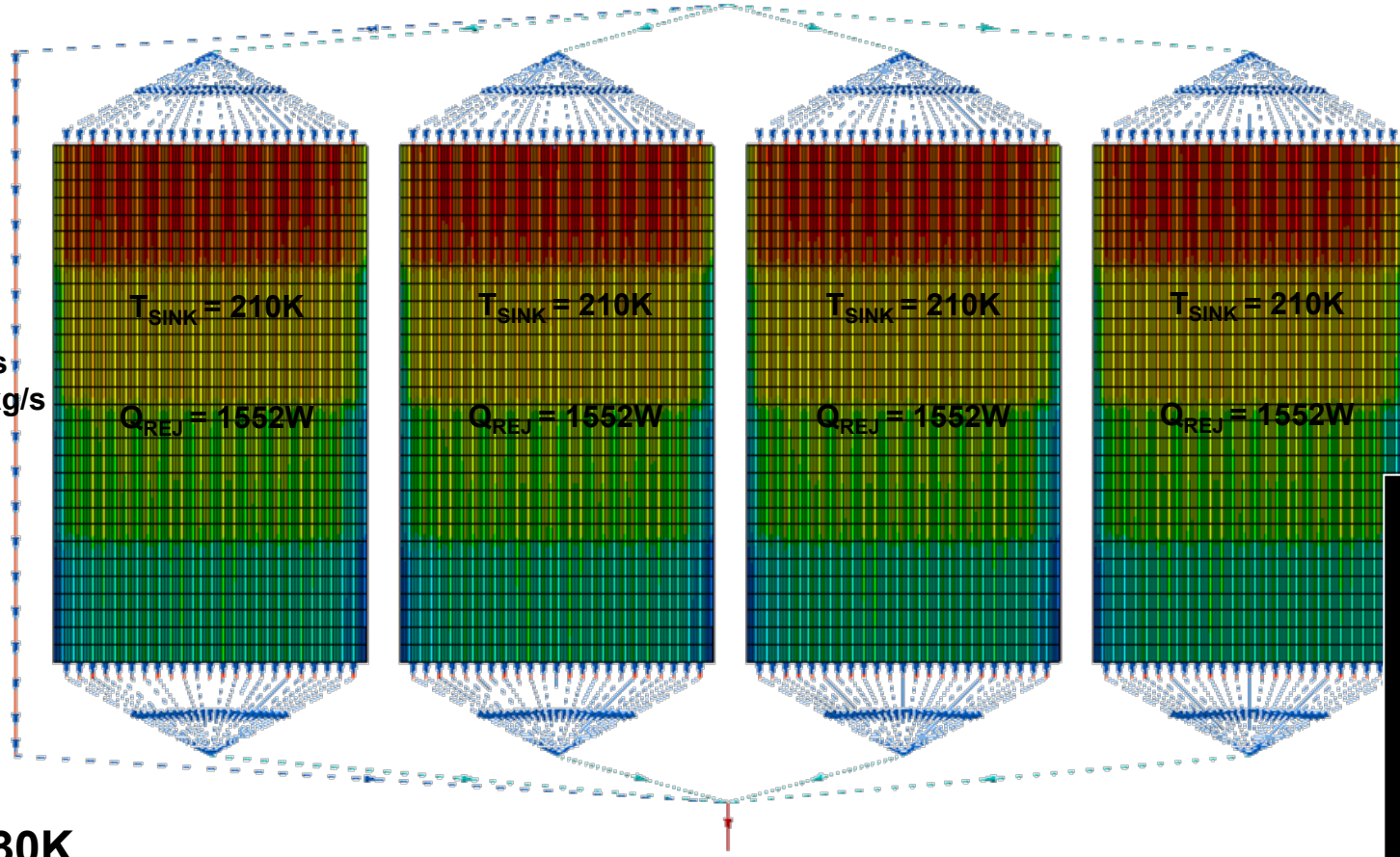

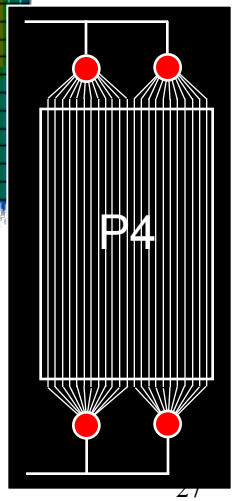

ΔT = 30K

ΔP = 1PSI

T_{OUT} = 283K

Total Q_{REJ} = 6207W

Bench Top Test Article Description

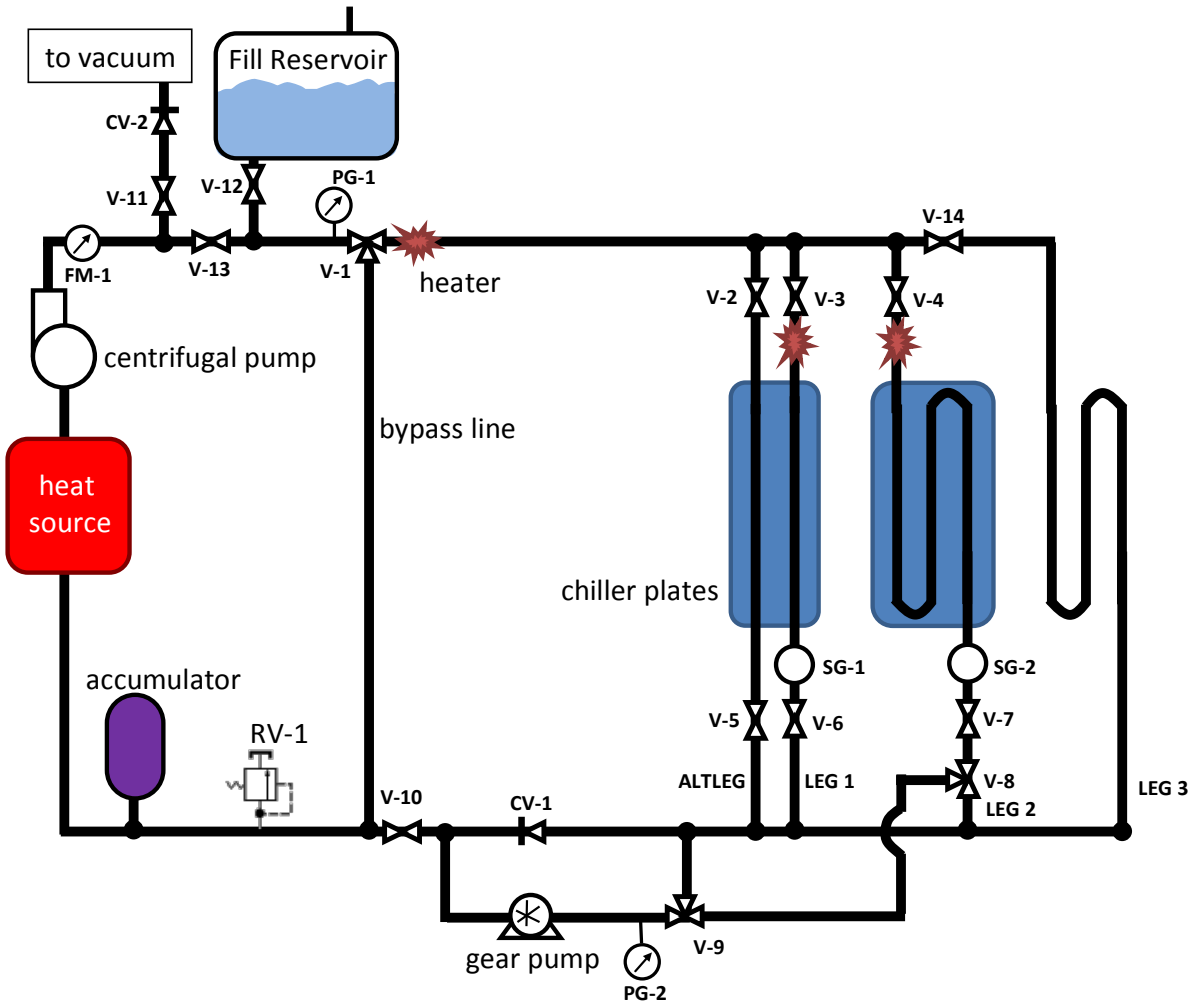

Bench Top Test Article Description

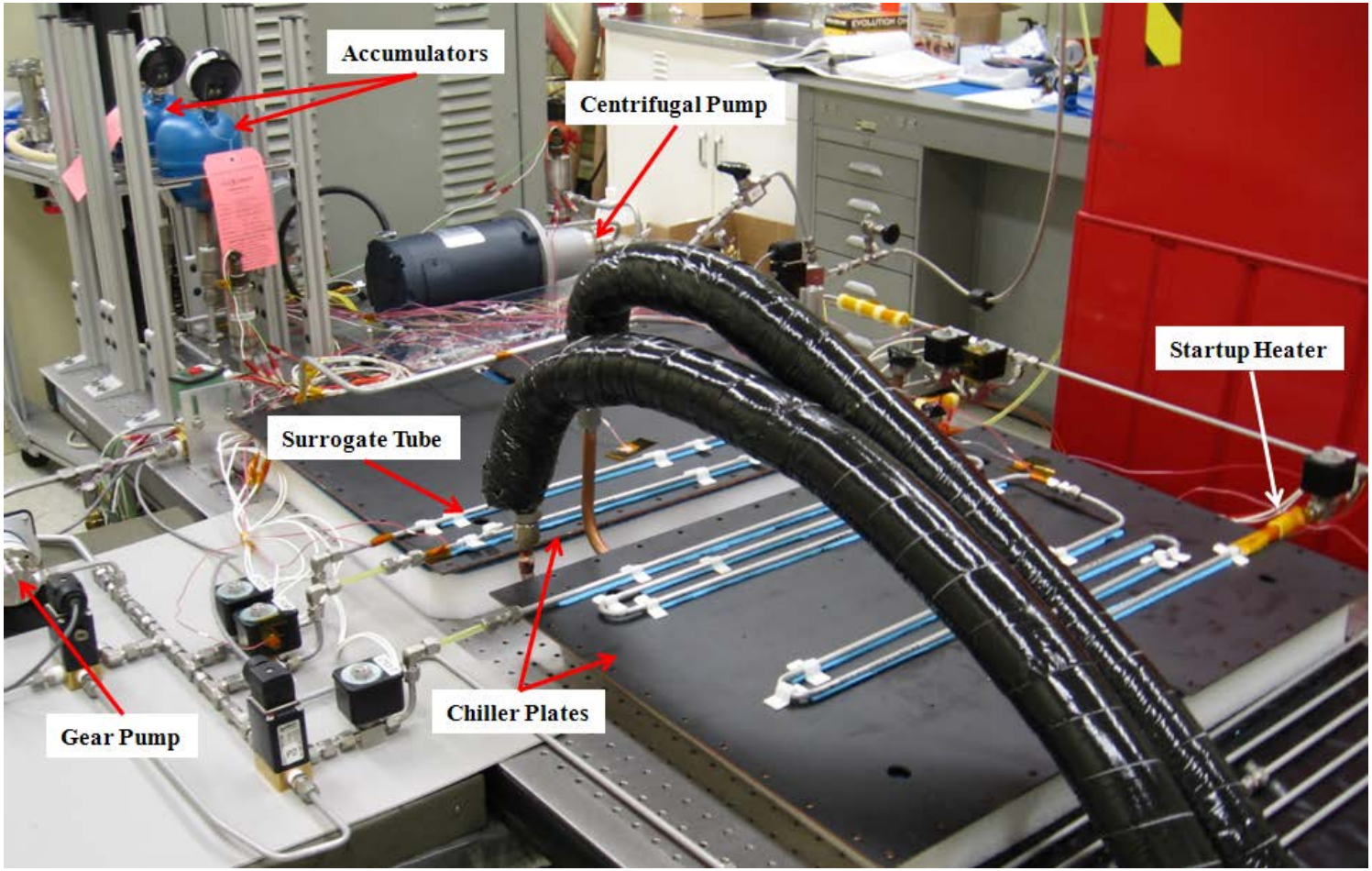

Conclusions

- The Digital Radiator permits mission flexibility while conserving resources
  - Tolerant of widely varying heat rejection requirements and sink temperatures
  - Conserves survival power
  - Radiator states are be changed quickly
- Areas which require further development
  - Heater and reservoir design to maximize evacuation while minimizing power and time to evacuate (stagnation time)
  - Need to demonstrate concurrent evacuation of multiple tubes through common drain manifold
  - Fault scenarios
  - Latch valves require design and flight development program

AIAA

The World's Forum for Aerospace Leadership