Module Architecture for *In Situ* Space Laboratories

Brent Sherwood*
NASA Jet Propulsion Laboratory, Pasadena, CA, 91109

The paper analyzes internal outfitting architectures for space exploration laboratory modules. ISS laboratory architecture is examined as a baseline for comparison; applicable insights are derived. Laboratory functional programs are defined for seven planet-surface knowledge domains. Necessary and value-added departures from the ISS architecture standard are defined, and three sectional interior architecture options are assessed for practicality and potential performance. Contemporary guidelines for terrestrial analytical laboratory design are found to be applicable to the in-space functional program. Dense-packed racks of system equipment, and high module volume packing ratios, should not be assumed as the default solution for exploration laboratories whose primary activities include un-scriptable investigations and experimentation on the system equipment itself.

I. Introduction

The state of practice for habitable laboratories for in-space science is exemplified by three ISS modules: *Kibo*, *Columbus*, and *Destiny*. Their common interior architecture is based on three organizing principles:

1. Investigation equipment contained in densely packed racks, fed by shared infrastructure utilities through standard interfaces.
2. Equipment racks along the module perimeter, with a central circulation lumen for routine access to the racks' face for operation.
3. Circumferential rack arrangement in which rack faces define the interior cardinal directions: port, starboard, nadir, and zenith.

This paper challenges default application of these three organizing principles for next-generation in-space laboratory modules. It proffers other interior *parti* – including a fully "everted" (turned inside out) arrangement compared to the state of practice – as more practical for foreseeable laboratory functional programs†. It concludes that pre-Phase A (where design leverage is maximal) should fully trade these alternative schemes for appropriateness against traditional assumptions.

The paper is organized into three parts: (1) analysis of how the state-of-practice interior architecture supports the ISS laboratory program; (2) first-draft programs for exploration laboratories at ISS and at planets; and (3) assessment of module architecture alternatives against those programs.

II. ISS Laboratory Architecture

Laboratory arrangements for the conduct of in-space science experiments evolved through four primary phases (Fig. 1):

1. *Skylab*, in which individual experiment setups, principally for biomedical study, are mounted freely in a generous habitable volume: one-time installation, one-time launch, closed architecture.
2. SpaceLab and Shuttle mid-deck lockers, in which banks (port/starboard and forward, respectively) of hull-conformal equipment racks allow ground changeout of instrumentation, equipment, and supplies between successive flights. The architecture exhibits flexibility at the *mission scale* by returning the module to Earth between missions for ground-based re-outfitting and verification.

---

* Manager Office 150, Strategic Planning and Project Formulation, M/S 301-335, AIAA/SATC Member

† Throughout this paper, "functional program" is differentiated from the common aerospace-industry use of the word "program" to mean the set of activities architecture is designed to support.

3. *Salyut* and *Mir* series, contemporary with the Shuttle phase, in which laboratory equipment for diverse investigations is packaged permanently into a constrained module volume. This architecture exhibits flexibility at the *operational-lifetime scale* by adding more pre-integrated modules into the orbital complex over time.
4. ISS, in which the International Standard Payload Rack (ISPR) architecture enables on-orbit rearrangement and changeout of equipment. The laboratory modules stay on orbit; instrumentation and equipment are packaged into modular racks that can be launched, installed, exchanged, and returned. (During the gap between cessation of Shuttle and qualification of *Dragon* or comparable systems, the ability to exchange racks as originally intended is suspended.)

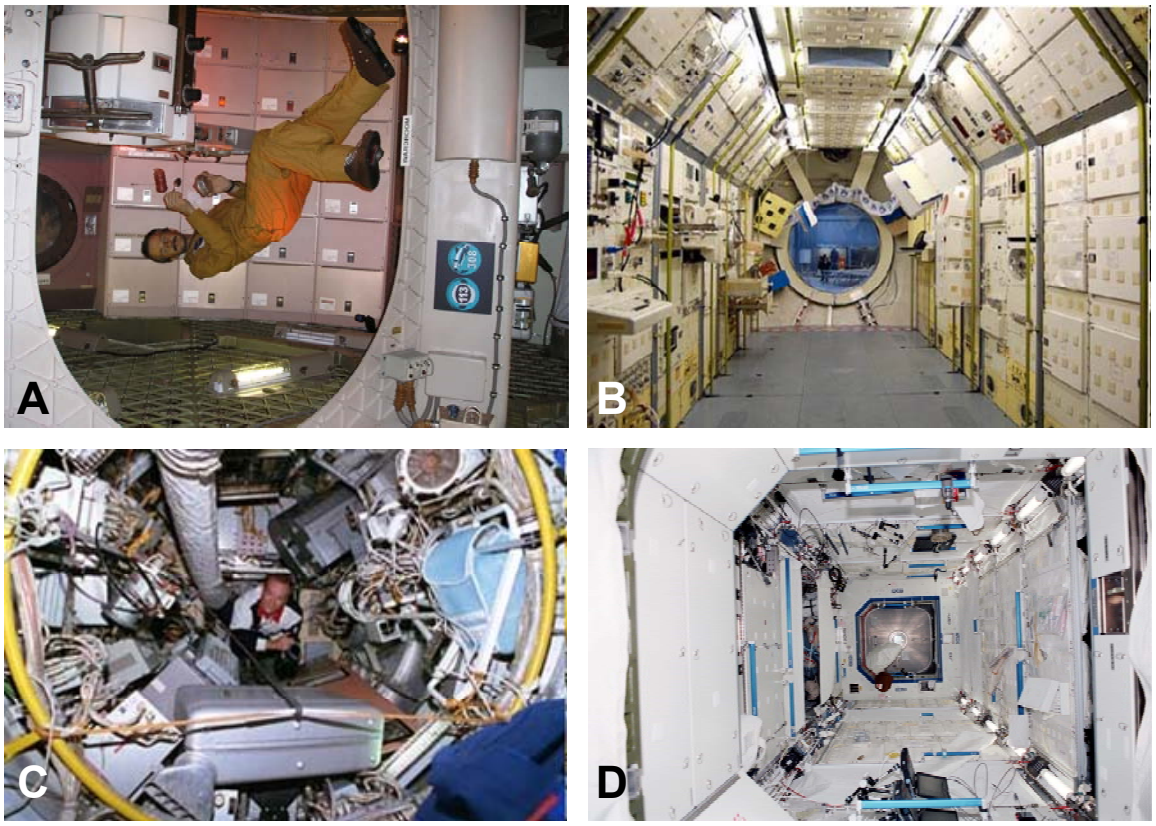

Figure 1. *In-space laboratory architecture has evolved through four phases: (A) Skylab; (B) SpaceLab; (C) Mir; (D) International Space Station.*

The ISS laboratory module architecture is based on an axisymmetric arrangement of four "standoffs" that provide structural load path, attachment and pivot points, and utility supply chases throughout the length of the modules (Fig. 2). In the large laboratories (*Destiny* and *Kibo*) each standoff feeds a bank of six racks, for a total of 24. Each rack is about the size of a closet; a typical system rack is about 545 kg (1,200 pounds) (Figure 3). (The original Space Station *Freedom* architecture had "double-length" modules with "single racks," for a total of 4x24 = 96 modular equipment units. ISS module system mass versus Shuttle capacity, as well as detailed design of the rack-hosted subsystems, led to doubling the rack size and halving the module length, hence the flight architecture of 4x6 = 24 racks.)

On-orbit and lifecycle flexibility of the standoff-and-rack architecture – and its sheer resource capacity (volume, power, cooling, data rate, etc.) – make ISS far superior to any prior Earth-orbital research facility. Its laboratories were conceived, developed, and outfitted to enable fundamental science in three primary areas: microgravity biology, human physiology, and materials science. Table 1 lists the total internal facilities complement now supporting experiments in these three areas.[1] Such comprehensive outfitting bespeaks a clear functional program:

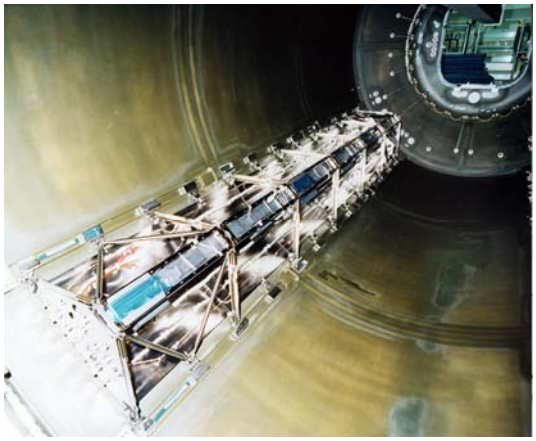

Figure 2. Destiny's *first stand-off was installed in August 1997, after its distributed systems were pre-integrated in a benchtop environment.*

Figure 3. Destiny's *first (EPS) system rack was installed in March 1998. The rack is pivoted at the lower standoff, and latched to the upper standoff. Boeing technicians connect power, data, and cooling lines and ducts between the lower standoff and the rack's ISPR standard panel.*

Long-lived, versatile, international laboratory for simultaneous research into effects of the Earth orbital environment on materials, fundamental physical processes, biological processes, and organisms including humans.

Of the 25 types of experiment facilities listed, those managed by ESA, JAXA, and NASA are packaged into about 30 racks distributed throughout *Columbus*, *Kibo*, and *Destiny*. They are interspersed with "system racks" containing the vehicle subsystems required for ISS to fly and be habitable. The ratio of science to total (science + system) equipment in the laboratory modules alone averages about half as individual racks are relocated throughout the complex during station buildup. Figure 4 "unwraps" the laboratory modules to map rack functions to locations. At the assembly epoch shown the ratio is 10:24 (*Kibo*), 11:24 (*Destiny*), and 10:16 (*Columbus*), 48% overall not counting stowage racks. The figure also shows *Tranquility* (Node 3) to demonstrate that many additional system racks are required for overall ISS vehicle functionality – so the overall vehicle science equipment ratio is significantly less than half.

The ISPR-based module architecture is carefully designed to maximize volumetric loading efficiency (the amount of equipment per unit pressurized volume). Not counting the conical endcones (themselves packed with distributed systems), 70% of the *Destiny* cross-sectional area is equipment and distributed systems (Fig. 5). Microgravity conditions allow an axi-symmetric arrangement of racks, which in turn leaves a square lumen ("quad-loaded" corridor). This symmetry does more than permit ISPR commonality; it permits each rack to be pivoted out for access to its interior, to the distributed systems in the standoffs beneath and above it, and to the hull behind it (Fig. 6). In a long-lived human space system, such access is important for inspection, servicing, and repair.

However, the impressive volumetric loading of the laboratory configuration has a dark side: extremely limited routine access to the densely packed functional equipment. This metric may be quantified as the ratio of rack face area to equipment volume: 0.86 m^{-1} for *Destiny*. The impacts manifest in three ways: design complexity – intricate design of science racks (Fig. 7); operations complexity – elaborate servicing operations for system equipment (Fig. 8); and environmental complexity – routine "arterial occlusion" (Fig. 9). What Phase A concepts portrayed in 1984 as a clean interface between crew and system has evolved a fractal dimension close to three, both through detailed design in Phase C and through practical use. The ISS architecture has "found" the surface-to-equipment-volume ratio it needed to be usable.

Insights for future in-space laboratories can be drawn from the ISS architecture:

1. <u>Substantial laboratory requires extensive outfitting</u> – A contemporary research complex to investigate fundamentals of the novel orbital environment takes about 30 racks of science equipment alone. It

addresses just three research areas and depends heavily on terrestrial analysis of returned samples, yet it required co-investment by multiple international partners to get built.

2. <u>More than half the equipment is system overhead</u> – System equipment requires at least again as much volume as bona fide science equipment, and this does not include stowage for supplies and spares.

3. <u>Dense-packed racks work better for transport than for use</u> – During actual usage experiment setups protrude far beyond the rack boundary; the fractal dimension of the as-used equipment interface is far higher than two. In addition, system servicing often requires opening the innards of racks that are packed "like a Swiss watch," by tilting them out of their operational position.

Kibo

Port End

Overhead	*Aft*	*Deck*	*Forward*
Port to JPLM	Stowage	TCS	Robotics WS
DMS	EXPRESS	EPS	Air volume closeout
Inter-orbit Com Syst	Workstation Rack	MELFI freezer	Multipurpose small payloads rack
Resupply Stowage	Kobairo, Gradient Heating Furnace	Air volume closeout	Ryutai fluid physics
Resupply Stowage	TCS	EPS	Saibo, life science rack
DMS	EXPRESS	TCS	MELFI freezer

Harmony Node

Destiny

Harmony Node

Overhead	*Starboard*	*Deck*	*Port*
EXPRESS	Temporary Sleep Station	Avionics	Stowage
EXPRESS	MELFI freezer	Avionics	EXPRESS
Materials Science Research Rack	Combustion Integrated Rack	Science window	DDCU
EXPRESS	Fluids Integrated Rack	Stowage	Stowage
Stowage	Robotics WS	Avionics	Robotics WS
DDCU	TCS	ARS	TCS

Unity Node

Columbus

Harmony Node

Overhead	*Aft*	*Deck*	*Forward*
Fluid science	European Drawer Rack	Systems	EXPRESS
Stowage	Microgravity Science Glovebox	Systems	Biolab
Stowage	Muscle Atrophy Research Exercise	Systems	European Physiology Module
Stowage	Human Research Facility	Workbench/Stowage	Human Research Facility

Starboard End

Node 3

Zenith (Node 1)

Forward	*Starboard*	*Aft*	*Port*
Water Reclamation 1	Oxygen Generation Syst	Avionics 1	Waste & Hygiene 1
Water Reclamation 2	ARS	Avionics 2	Waste & Hygiene 2

Nadir

Figure 4. *Snapshot-in-time of multi-module ISS rack topology shows about half the complex's racks conduct science (green = science; yellow = stowage; white = system).*

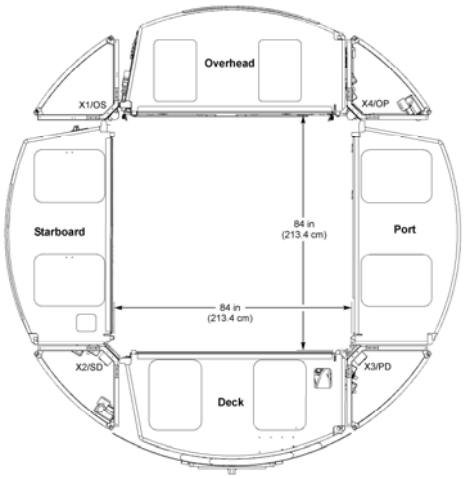

Figure 5. *Cross section of Destiny shows high volumetric loading of equipment at the expense of minimal surface area for access to the equipment.*

Table 1. *Internal complement of ISS laboratories' experiment provisions.*

System	Performance
Biological Research - Incubators, growth chambers, centrifuges	
BioLab (ESA)	Incubator, microscope, spectrophotometer, and two centrifuges to provide artificial gravity for experiments on microorganisms, cells, tissues, plants, and small invertebrates
Commercial Generic Bioprocessing Apparatus (NASA)	Programmable, accurate temperature control – from cold stowage to customizable incubator – for experiments on cells, microbes, and plants
European Modular Cultivation System (ESA)	Controlled cultivation of plants and other small organisms, with two centrifuges for up to 2g
Kriogem-3M (RSA)	Refrigerator-incubator for sample stowage, and culture and incubation of cells, tissues, and microorganisms
LADA Greenhouse (RSA)	Plant biology and space farming, (multiple generations of sweet peas, wheat, tomatoes, and lettuce, since 2002)
OSTEO Bone Culture System (CSA)	Cultures bone cells in space
Saibo Experiment Rack (JAXA)	Clean-bench glovebox with microscope to isolate organisms. Cell Biology Experiment Facility with incubator and centrifuges.
Human Physiology Research - effects of Earth-orbital environment on human body	
European Physiology Module (ESA)	Equipment for studying microgravity metabolism, neuroscience, cardiovascular, bone, and muscle physiology
Human Research Facility (NASA)	Two racks: clinical ultrasound; refrigerated centrifuge; devices for measuring mass, blood pressure, and heart function; Pulmonary Function System
Human Research Hardware (CSA)	Radiation dosimeter; hardware and software for studying hand-eye coordination, visual perception and neurophysiology
Muscle Atrophy Research and Exercise System (ESA)	Research on musculoskeletal, biomechanical, and neuromuscular human physiology
Matroshka (RSA)	Mannequin of human torso (plastic, foam, and a real human skeleton) equipped with radiation sensors
Human Life Research (RSA)	Cardiovascular System Research Rack, Weightlessness Adaptation Study Kit, Immune System Study Kit, and Locomotor System Study Facility
Physical Science and Materials Research - combustion, fluid physics, and materials	
Combustion Integrated Rack (NASA)	Optics bench, combustion chamber, fuel and oxidizer control, five cameras
Fluid Science Laboratory (ESA)	Convection and fluid motions
Fluids Integrated Rack (NASA)	Colloids, gels, bubbles, wetting and capillary action, and phase changes including boiling and cooling
Materials Science Research Rack (ESA, NASA)	Controls thermal, environmental, and vacuum conditions of experiments to study metals, alloys, polymers, semiconductors, ceramics, crystals, and glasses undergoing phase changes
Ryutai Experiment Rack (JAXA)	Multipurpose rack system includes Fluid Physics Experiment Facility, Solution Crystallization Observation Facility, Protein Crystallization Research Facility, and image processing
Multipurpose - Modular racks; freezers; gloveboxes	
European Drawer Rack (ESA)	Cooling, power, data, vacuum, and GN_2
EXPRESS Racks (NASA)	Cooling, power, data, vacuum, and GN_2; eight locations throughout ISS
GLACIER freezers (NASA)	Down to -185 °C
MELFI freezers (ESA-built, NASA-operated)	Down to -80 °C
MERLIN incubators (NASA)	-20.0 °C to + 48.5 °C
Microgravity Science Glovebox (ESA-built, NASA-operated)	Containment of experimental and hazardous materials; holds equivalent of two airline carry-on bags
Portable Glovebox (ESA)	Can be used in any laboratory module

Figure 6. *Installation of a rack into* Destiny *during STS-98 shows how the architecture accommodates relocation and replacement of individual racks. Microgravity makes the job far easier than on Earth despite tight clearances in the module corridor and hatches*

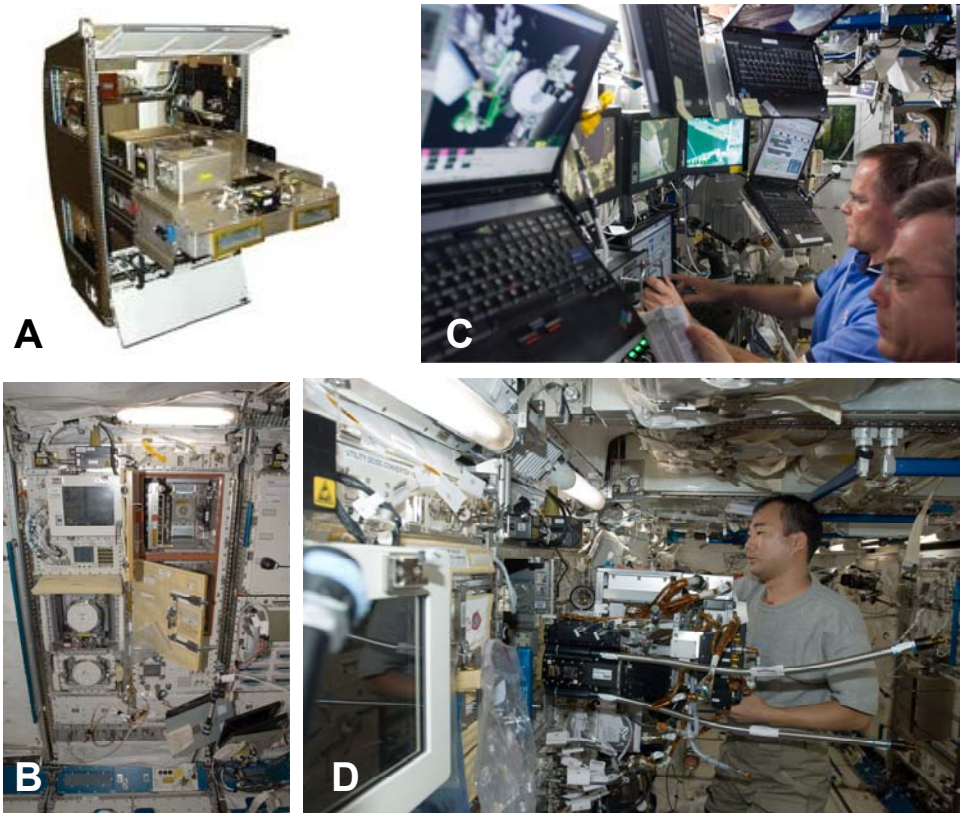

Figure 7. *Some science and operations racks unfold like tackle boxes for use. (A) Fluids Integrated Rack: after the door opens an optical bench with microscope rotates down for set-up. (B) Saibo life science facility contains incubator, centrifuge, and glovebox. (C) Robotics Work Station blossoms into multi-display situational awareness and control center. (D) Ryutai fluid physics experiment facility disgorges Marangoni convection apparatus for use.*

Figure 8. *Servicing ISS systems requires operations within the racks. (Left, February 2010) Expedition 22 Commander Jeffrey Williams installs the Urine Processor and Distillation Assembly into the Water Recovery System rack in* Destiny *during the STS-130 visit. (Middle, January 2010) Williams performs in-flight maintenance on* Kibo's *Carbon Dioxide Removal Assembly. (Right, June 2009) Expedition 20 flight engineer Koichi Wakata works with the Fluid Control Pump Assembly, part of the Internal Thermal Control System.*

Figure 9. *The station's central circulation corridor bristles with apparatus. Expedition 13 science officer and flight engineer Jeffrey N. Williams uses* Destiny's *Capillary Flow Experiment in August 2006.*

III. Future in-space laboratory functional programs

As with all architecture, clearly defining the functional program for an in-space laboratory is essential to know whether any particular architecture is appropriate. Not all laboratory programs are the same, as a comparison of historical and hypothetical alternatives shows (Table 2). The table puts the last section's concise description of ISS science functional program into historical context. Comparing it to predecessors reveals how ISS enables uniquely wide-spectrum and in-depth fundamental science.

The "ISS Exploration Laboratory" program highlights how ISS could be augmented to extend its mission to applied science and engineering development tailored for human deep-space exploration. For example, cancellation of the Centrifuge Accommodation Module limited variable and reduced gravity experimentation to the scale of just cells, small plants, and invertebrates (in *Kibo's* Cell Biology Experiment Facility centrifuge in the Saibo rack, and in *Columbus'* BioLab rack). And while prototypes of some exploration-class systems (e.g., radiation storm shelter,

multi-year food) can be tested within the existing ISS system, others (e.g., integrated deep-space life support system) cannot be tested in a way that would make ISS operations and safety depend on them. A dedicated laboratory facility, possibly an attached module, would likely be needed for this purpose.

Table 2. *Summary of historical and hypothetical in-space laboratory function programs.*

Example	Summary functional program
Skylab	Outpost for studying the Sun and investigating human adaptation to Earth orbital conditions over months
Spacelab	Versatile, reconfigurable laboratory providing repeated multi-day access to Earth orbital conditions for diverse biological and materials science experiments
Salyut & Mir	Multiple generations of a standard laboratory facility for progressive demonstration of human function in Earth orbit, including validation of equipment refinements
ISS	Long-lived, versatile, international laboratory for simultaneous research into effects of the Earth orbital environment on materials, fundamental physical processes, biological processes, and organisms including humans
ISS Exploration Laboratory	Facilities for validating requirements and approaches for artificial gravity, radiation shielding, and life support systems capable of three-year remote reliability
Lunar (possibly itinerant) Outpost	Compact, easy-to-transport, self-contained, multi-purpose laboratory for conducting field geology, sample selection, and resource prospecting at initial or multiple sites
Lunar Base	"ISS for the lunar surface environment" (see above) *plus* research into processing native materials into useful substances, and developing Mars-capable systems
Mars Base	"Lunar Base for the Mars environment" (see above) *plus* research into the past and present habitability of Mars including subsurface

Similarly, a stark contrast appears between an outpost-type lunar laboratory and one capable of in-depth investigation of the lunar environment and its practical applications. The Constellation program analyzed outpost-level concepts. Figure 10 shows a layout of the "Lunabago" excursion mode for one of them (Habitation Scenario 12.1), in which an itinerant habitable laboratory module provides a temporary base of operations for fleeter pressurized rovers.[2] Such an architecture could cover a lot of lunar territory compared to either Apollo or stationary-base architectures, and could enable crews to explore interesting places (e.g., lava tubes) far from an initial landing site or a main base.

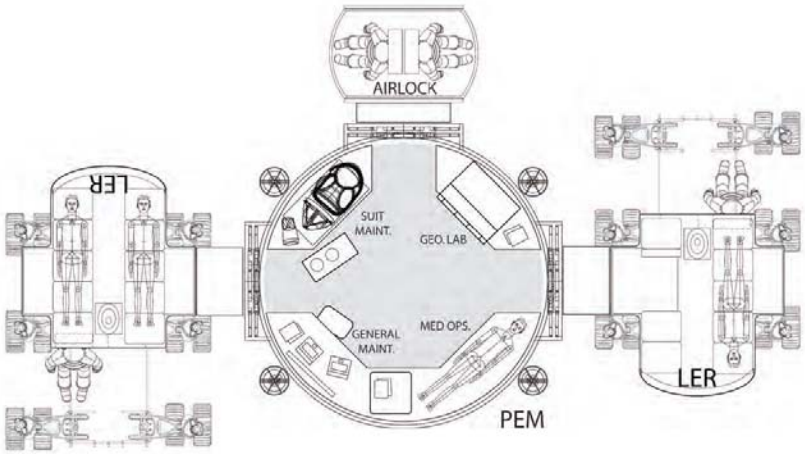

Figure 10. *Constellation lunar surface Habitation Scenario 12.1 provides scant science accommodations.*

But when we parse "exploration" from "science" functions, what breadth or depth of experiments could this architecture accomplish? Comparing its equipment outfitting allocation to ISS reveals immediately that it provides only minimal intra-vehicular support to what is essentially a rock and photo collecting field trip. It cannot

accommodate lunar surface investigations other than basic exploration. Given a ~$\$10^{11}$ investment to restore human lunar surface access, this laboratory architecture might nonetheless be useful as an adjunct capability in a lunar surface functional program that also includes more extensive, stationary laboratory facilities.

What might be the rest of that functional program – what would human planet surface missions aim to accomplish?[3] Table 3 proposes seven salient knowledge domains, both fundamental and applied. The ISS research agenda collapses into two of them: #2 and #3. All except #6 would apply to both the Moon and Mars, albeit with different details. The fifth domain is the principal "Mars-forward" purpose for human lunar missions; yet even using the Moon for this purpose would require significant *lunar* investigations in the first four domains that would not be directly transferable to Mars later.

ISS addresses domains #2 and #3 in the Earth orbital environment. Applying this knowledge base to human exploration as described earlier, extending it to the lunar and Mars environments, and then adding the other five domains implies that in the end, and even despite the enormous cost of transporting mass to the surface of the Moon and Mars, laboratories that take advantage of humans in those places would be more like ISS than like *Skylab* (or the Lunabago).

Apart from their broader scope, lunar and Mars laboratories must surpass ISS in two other ways. First, they could not rely as much on terrestrial analyses of returned samples (e.g., tissue and processed-materials samples) because their remoteness makes the resulting research cycle time impractical. Second, the five additional knowledge domains all require large-scale investigation campaigns that either collect large amounts of data, process large sample throughput, or conduct physically large experiments. These investigations cannot be accomplished in physically precious laboratories.

Those hoping to see human planet surface exploration occur "soon" may find this result jarring, as it raises the specter of "ISS on the Moon" which in turn appears to render the whole enterprise impractical. However, the finding neither invalidates minimalist architectures for initial exploration nor trivializes the value of their initial investigations in the seven knowledge domains. What it does indicate is that minimalist architectures suffer from sparse coverage of the knowledge domains, be severely challenged to choose open-loop sequences of largely pre-planned investigations, and therefore have difficulty justifying their cost beyond the historic "firsts."

IV. Laboratory module architecture options

The analysis that follows presumes robust, ISS-caliber investigations in the seven knowledge domains. Of necessity, in-space laboratories depart from the leading trend in contemporary terrestrial laboratory design practice: "open plan" configurations.[5] The harsh economics of space architecture force contained-module, closed-plan laboratories until extensive *in situ* construction can be achieved. This means the ISS precedent and other volume-constrained mobile laboratories are appropriate starting points for adaptation based on planet-surface conditions and the expanded laboratory functional programs described above. However, most of these adaptations, examined below as departures from the ISS architecture, lead inexorably to a laboratory architecture less dense-packed than ISS, and therefore to more volume per researcher and thus higher specific cost – a critical finding.

The first departure is caused by planet surface gravity. Researchers would work in a single (vertical) orientation, whether sitting or standing, so science equipment cannot in general be located overhead or underfoot as on ISS. Complex system equipment cannot easily be located overhead either, because even at 1/6 g on the Moon, a typical system rack would weigh more than a man (a weight-offloading suspension structure might permit ceiling-mounted system racks but would complicate their interconnections). And the inevitable intrusion of fines into a surface habitat argues against locating sensitive system equipment underfoot – no laboratory would do this even on Earth where dust is not toxic, metallic, or oxidizing. ISS "rolling" hatches could be adapted to gravity use in a horizontal orientation, obviating the swing clearance required for submarine-type hatches.

So the radial symmetry of ISS modules collapses to at best bilateral symmetry. Albeit obvious, this finding is important because it begins to erode the structure, interface, and rack commonality with ISS that would be the basis of inheritance claims. A double-loaded corridor halves ISS' intrinsic equipment volume ratio, a severe decrement. However, module utilization efficiency could be partly regained by making a second departure: segregating system from science equipment into separate modules. Figure 4 shows how ISS itself began this trend: Node 3 contains eight system racks. None of the ISS laboratory modules is self-sufficient and the whole complex operates together as a system. Surface laboratory modules could be made even more parasitic, fed with utilities from separate service modules through a berthing interface. Distilling functions to this degree would require more total pumping, fan, and electrical power, but may be worth it overall to co-locate laboratory functions. A supporting consideration is that some laboratory equipment (e.g., polymerase chain reactors, tissue culture labs, cell irradiators, nuclear magnetic resonance instruments, electron microscopes, confocal microscopes, veterinary habitats, even acid storage and glass

washing) require special enclosures because of vibration, heat, light, air handling, or safety specifications.[6] These and others might best be hosted in separate parasitic modules.

Table 3. *Representative examples of laboratory investigations that drive requirements for seven knowledge domains at human planetary destinations.*

Knowledge Domain	Applicability		Example Laboratory Investigations
	Moon	Mars	
1. Properties of native surface environment and location-specific phenomena	✓	✓	Observational science: exploration and documentation of conditions at diverse places (e.g., lunar poles and permanently shadowed craters, lava tubes) Fundamental research into natural phenomena and their relationship to place (e.g., lunar terminator-passage dust levitation, diurnal transport of volatiles, cold-trap ice; Martian gully formation, subsurface liquid water interface)
2. Fundamental physics; effects on materials and systems	✓	✓	Reduced gravity fluid and granular flow; sieving and separation; combustion and convection Material properties and system performance with short- and long-term exposure to native conditions
3. Effects on biological systems, organisms, and humans	✓	✓	Reduced gravity deconditioning, reconditioning, stabilization Sky and backscattered radiation; quantification of regolith shielding effectiveness and variability Toxicity of regolith (e.g., pulmonary effects of lunar fines, Martian oxidizing regolith, trace compounds) Adaptation of native materials as intentional or accidental growth media; control of contaminants
4. Resource potential and utilization	✓	✓	Grading, paving, excavation, beneficiation Prospecting, capture and processing of lunar ice from cold dark craters, low-concentration volatiles distributed in regolith, regolith metals including reduced iron, and volatiles bound in regolith minerals Prospecting, capture, and processing of Mars subsurface ice, atmospheric gases, and metals and volatiles bound in regolith minerals Production of engineering materials: polymers, fluids, glass, structural shapes Limits to feasible industrialization (e.g., chip foundries?)
5. Planet-surface operations capabilities and confidence	✓	✓	Production scaleup of potable water, breathing gases, and propellants Control of native dust interference and intrusion; construction of paving and foundations; assembly and shielding of Class II habitats Maintenance, repair, jury-rigging, repurposing, and recycling of systems and subsystems Control of microbial ecologies; multi-generation cultivation of plants and small animals Routine and trauma medical and dental care Long-duration housekeeping, including cooking
6. Past or present life		✓	Validated protocols for performing non-contaminating human-mediated investigation of special zones (*a la* Lake Vostok in Antarctica),[4] including lab facilities that may operate with large pressure differential[5] Sophisticated organic chemistry; analysis of lipids, peptides, nucleotides including chirality, sequencing, and investigating relationship between organic molecules and native conditions over geological time
7. Long-term habitation	✓	✓	Industrial-scale production of water, breathing gases, propellants, and industrial materials Construction and qualification of Class III habitats Advanced medical care Sustainable biological life support Fabrication and test of mechanical, electronic, and optical components Closed-loop material recycling

The presence of gravity would (re)introduce requirements for horizontal surfaces for work of all types including writeup; for chairs; and for walkways unobstructed by protruding instruments, cables, tubes, and supplies. Safety considerations include the familiar terrestrial possibilities of trips, falls, falling objects, and spills. The tight confines of a laboratory module constrain reduced-gravity gait and swing, so terrestrial laboratory design guidelines are advisable: 150 cm between facing lab benches to allow back-to-back work; 320 cm centers for "module" spacing (thus 85 cm bench depth); corridors no wider than 180 cm (to limit ad hoc storage areas); 120 cm ELF (equivalent linear "feet") of width per workstation.[6] The typical lab-bench configuration is the standard for both wet labs and dry labs for good reasons: widely adaptable work surface, reconfigurable shelving, standard utility connections for fluids, gases, power, and data (Fig. 11). "Reverting" to a familiar terrestrial configuration is the third departure from the ISS architecture, and is a significant volume driver.

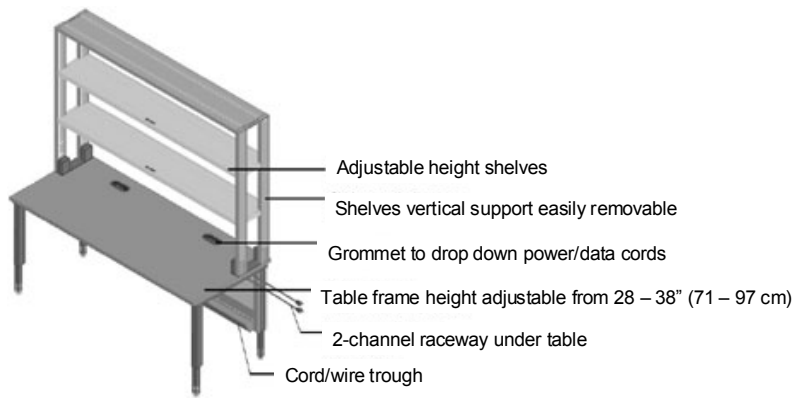

Figure 11. *Typical laboratory bench configuration is time-proven as widely adaptable.*[7]

The fourth departure is that wall-hugging equipment – the ISS paradigm – may not be the best arrangement. It may not be practical in expandable (inflated soft-wall) structures (Fig. 12), where equipment mounting and utilities can be better integrated with the structural core. Even for horizontal hard-shell modules, a curved hull itself is not *im*practical for accommodating the ergonomic mid-body envelope needed for people to stand and walk. Delimiting one side of the workspace and circulation corridor by the hull itself rather than by an active equipment face would help keep it clear, and provide wall area for whiteboards and other data capture and display surfaces.

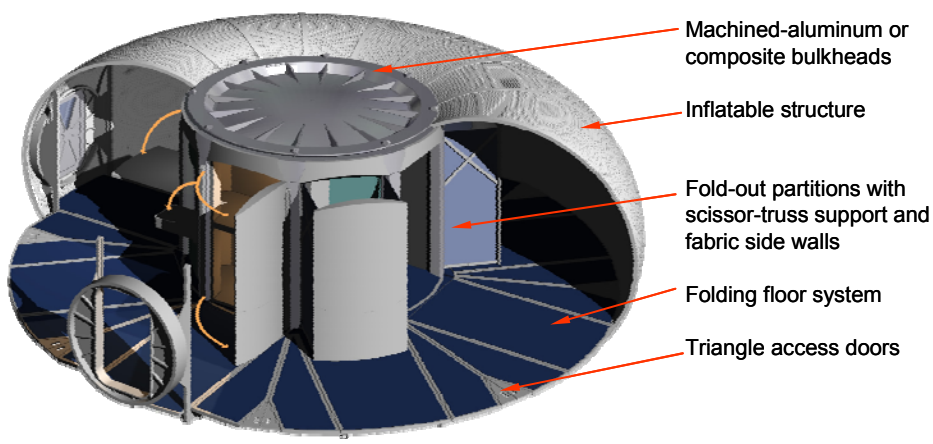

Figure 12. *Outboard hull of inflatable module makes a natural workspace and circulation corridor. Concept by NASA, Constellation Lunar Surface Systems Habitation Team.*

The fifth departure challenges the rack-based approach altogether, by deconstructing its design drivers:

1. Foreknowledge of well-planned investigations – As investigations delve deeper into a knowledge domain, the less the research direction can be anticipated, and thus the less the equipment configuration can be designed a priori. The nature of exploration requires that scientific experiments be conceived, set up, and conducted in response to discovery after the mission is underway. Typical wet labs for chemistry (Fig. 13), biochemistry, or materials processing accommodate ad hoc setup and re-use of simple, multipurpose equipment, which requires a bench-top environment. (As noted in Table 3, the special case of Mars life-investigations might require bioprotection laboratories with complex "benchtop" environments, depending on the outcome of robotic precursor missions.) Some analytical and facility equipment could be packaged into racks or lockers, but *in situ* research labs should also be well-provisioned with general-purpose equipment (microscopes, microtomes, polishers, specimen containers, reagents, reusable apparatus and a way to wash it, etc.). No other provisioning scheme would be as efficient.
2. Modular replacement of equipment over the life of the module – Even ISS utilization scenarios currently focus on replacing sub-rack-level assemblies and components, not entire racks. The primary value of rack-based packaging has been relocating system racks during station buildup. Weight alone argues against rack-level changeout for planet surfaces: rack-scale units are unwieldy in a gravity field. Component-level and assembly-level changeout, and addition of new modules, are more practical.
3. Earth-to-orbit transportation constraints – The ISS non-Russian laboratory and system equipment architecture is tightly coupled to Shuttle-based launch and de-orbit capability (Figure 14), which it has promulgated into the Japanese HTV resupply system. But as logistics modules become surface-to-surface shipping containers (i.e., Earth to Moon), it makes less sense to expend development funds to redesign laboratory equipment into Swiss-watch racks which cannot be moved as easily in planetary gravity as in microgravity. The shipping configuration may no more relevant to the usage configuration than is a wood crate on a loading dock relevant to an installed gas chromatograph in a terrestrial laboratory. Uncrating, unpacking, assembly, deployment, checkout, and calibration will be required for sophisticated *in situ* equipment anyway, so we should avoid casually equating the rocket/module delivery method with what is needed in the functioning laboratory.
4. Investigations of the system equipment itself – A significant fraction of the fifth knowledge domain comprises recursive investigations: how to survive, operate, adapt, utilize, and even how to experiment in such environments. One of the severest lessons learned from ISS is that life support and crew-systems equipment operational reliability is disappointing. Clearly neither air-revitalization nor toilet technology is ready for a three-year voyage to Mars. No amount of terrestrial computer analysis can trump observation, repair, jury-rigging, and incremental improvement *in situ* as a way to advance the state of practice for living in space. As shown in Fig. 8, ISS hardware was designed to be serviceable but not the subject of experimentation.

Figure 13. *Unprogrammed laboratory research needs flexible facilities and equipment.* http://i.treehugger.com/images/2007/10/24/chemistry%20lab-jj-001.jpg

Figure 14. The basic unit of pressurized-cargo up-and-back manifesting is the ISS standard rack. Leonardo MPLM in Discovery payload bay, STS-102, March 2001.

Summarizing, the five planet-surface departures from ISS laboratory architecture are:

1. No heavy equipment overhead or clean equipment underfoot
2. System equipment segregated into service modules as much as possible
3. Laboratory work stations including benchtop, shelves, and chairs
4. Use of space between equipment and hull
5. Deconstruction of the ISS standard rack as the fundamental operational unit.

These five departures would allow some freedom arranging the three fundamental elements of laboratory workspace: equipment zone (flexible accommodation of analytical equipment and experiment setups), work corridor (space for researchers to stand, sit, confer, egress, and move equipment through), and casework (installed storage cabinets, drawers, shelves, and benchtops). Table 4 characterizes three basic arrangement options within a confined (small-diameter horizontal) module. For the case of larger-diameter (e.g., inflatable or HLV-diameter rigid modules oriented vertically) these options could be employed and combined as repeatable units.

Table 4. *Three basic options for arranging research accommodations in space modules.*

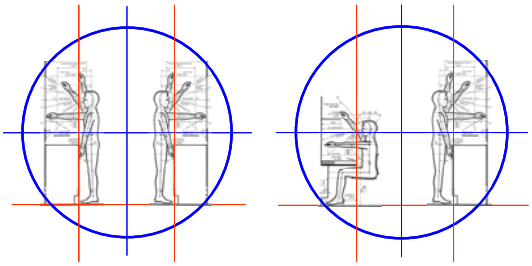 Double-loaded corridor	Most similar to ISS but adapted for gravity conditions. 3.1-3.5 m diameter recommended for horizontal cylinder modules due to overhead reach/access. [8] High end of this range is consistent with VA standards for benchtop "equipment zone" and corridor needed for back-to-back researchers, 2(85) + 180 cm. Low end could support single-depth research, with standard bench on one side and casework opposite. 3.3 m module depicted, with 156 cm bench spacing. Equipment face to volume ratio = ~1 m^{-1}.
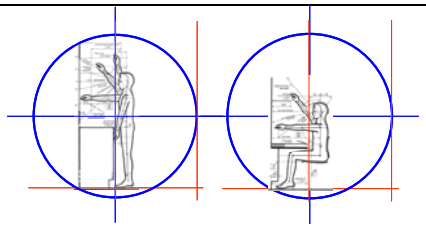 Single-loaded corridor	2.4 m diameter module could accommodate single-depth research only. Useful for "pocket modules" with isolated laboratory functions. Useful for transportation-constrained architectures, e.g., mobile lab modules.
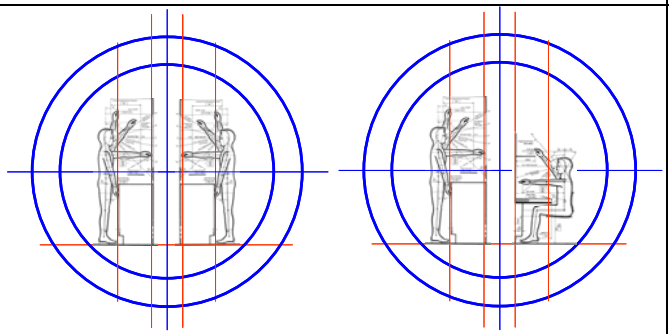 Double-loaded equipment zone	Fully everted ISS arrangement: double-sided equipment zone in the center, surrounded on both sides by corridors to accommodate multiple researchers. Maximizes equipment accessibility. Best environment for collaborative research[7]. Highest system overhead (lowest ratio of equipment volume to open space). For 3.3m module with 156 cm wide central equipment zone, equipment face to volume ratio ~2 m^{-1}.

The first option (double-loaded corridor) is based on a 3.3 m module diameter (smaller than ISS), which avoids overhead and underfoot locations impractical for the human reach envelope.[8] Terrestrial-standard standing and seated lab-bench configurations are shown to fit in this module. The second option (single-loaded corridor) shows the minimum feasible diameter module (2.4 m) for these configurations. With very tight clearance for a second researcher to squeeze by the illustrated researcher, particularly in the seated configuration, applicability would probably be limited to mobile laboratories. The third option (double-loaded equipment zone) would allow maximum access for flexible equipment setup. The 3.3 m and ISS diameters are both shown. With accommodation for overhead utilities, the narrower module provides insufficient corridor clearance past the illustrated researcher. The ISS-diameter option offers sufficient room for passage and collaboration, as well as a range of feasible floor-height locations.

Departures #4 and #5 enable the second and third options by spreading equipment out and allowing it to occupy the center of the module, respectively. Departures #1, #3, and #5 reduce the ratio of equipment volume to pressurized volume compared to the ISS benchmark, again by spreading the equipment out, including recognizable workstations, and proscribing locations above the ceiling and under the floor. Departure #2 compensates for this reduced ratio somewhat by removing system equipment to other modules, which shifts the impact elsewhere in the complex.

The first option has an equipment-face-to-volume ratio around unity, about 15% higher than ISS laboratory modules. This is because of departure #1. However, the third option has a ratio about twice as high as that, because of the everted configuration including departure #4. Early concept trades conducted by system-engineering teams charged with minimizing mass to the surface or maximizing volumetric "efficiency" would typically interpret this high face-to-volume ratio as a poor equipment-to-volume ratio, and thus reject the third option even by inspection. At the early lifecycle stage when such basic architecture trades are made, it would be rare for the trade parameters to include crew time to access dense-packed equipment, or hard-to-measure efficiencies in the detailed conduct of investigations. Yet this laboratory *parti* – linear lab-bench equipment zone, storage and large equipment underneath, reconfigurable apparatus racks beginning 51 cm above the benchtop and accessible from both sides, utilities fed from the ceiling, shutoffs at the door – is so time-tested that it deserves careful consideration.

What appears to be "free" crew volume is actually functional workspace. The guidance given contemporary laboratory designers is instructive:

> "Maximizing flexibility has always been a key: the ability to expand easily, to readily accommodate reconfigurations and other changes, and to permit a variety of uses...
>
> - Flexible engineering systems and casework that encourage research teams to alter spaces to meet their needs
> - Write-up areas as places where people can work in teams
> - All the space necessary for researchers to operate properly near each other
> - Clearly defined circulation patterns."[7]

We should not let keen awareness of the cost of volume on the surface cloud expectations about how scientific and capability-development research can be conducted. Terrestrial laboratories use five times as much energy and water as other buildings, as well as once-through airflow and exhaust.[7] For planet-surface modules, volume allocations should be commensurate with the costs of adapting these accommodations.

A special case is the opposite of departure #2, with the objective described earlier of experimenting on system equipment itself. System housekeeping and life support equipment is both the most finicky and the most vital for space architecture, and its criticality becomes dominant in deep space. It is unlikely we would design adequately reliable and maintainable subsystems for Mars-class mission durations or long-term lunar habitation without learning about system performance *in situ* on the Moon, where dust, inadequate resupply, and other operational constraints are facts of life. So it is logical but novel to envision a surface module dedicated to the developmental test of life support components and subsystems in an operational environment. Safely separable from the rest of the complex, the module might have a double-loaded equipment zone running through the center, making switchable strings of system hardware the subject of performance comparison and tuning, life-test, incremental upgrade, and crew training.

V. Conclusion

ISS enables highly capable, fundamental research in two knowledge domains: effects of microgravity on biology; and effects of microgravity on physics and materials. Its three USOS laboratories share an architecture based on three organizing principles: investigation equipment densely packed into racks; racks arranged along the module hull; and racks on all sides. These principles evolved through four generations of Earth-orbital laboratories

culminating in ISS. The ISS precedent yields three key insights for next-generation in-space laboratories: a high-capability laboratory requires extensive outfitting (30 racks of science equipment alone in the case of ISS); more than half the equipment is system overhead; dense-packed racks work better for transport than for use.

Human exploration of the Moon and Mars would implicitly involve seven knowledge domains that subsume and extend the two addressed by ISS: (1) native surface environment and phenomena; (2) fundamental physics, materials and systems; (3) effects on biological systems, organisms, and humans; (4) resource utilization; (5) planet-surface operations capabilities; (6) past or present life; (7) long-term habitation. Laboratories capable of making significant progress on this diverse and deep research agenda would need to be well-outfitted on par with ISS.

The architecture of such planet-surface laboratory modules is both liberated and complicated by five key departures from the ISS model: no heavy equipment overhead or clean equipment underfoot; system equipment segregated into service modules; horizontal work surfaces including benchtops, shelves, and chairs; active use of the space adjacent to the hull; and deconstruction of the ISS standard rack as the fundamental equipment unit. Three basic architectural parti are feasible: ISS-derived, double-loaded corridor; narrower single-loaded corridor; and everted, double-loaded equipment zone. The last of these, which has the highest intrinsic crew-to-equipment volume ratio, would be consistent with the open-ended nature of *in situ* investigations despite appearing inefficient. The cautionary message is not to discount this configuration prematurely.

References

[1]NASA, International Space Station: All Laboratories Are Go for Research! Users' brochure, http://www.nasa.gov/pdf/276628main_ISS_Brochure.pdf

[2]AS Howe; G Spexarth; L Toups; R Howard; M Rudisill; J Dorsey (2010). Constellation Architecture Team: Lunar Outpost Scenario 12.1 Habitation Concept. *Proceedings of the Twelfth Biennial ASCE Aerospace Division International Conference on Engineering, Science, Construction, and Operations in Challenging Environments* (Earth & Space 2010); Honolulu, Hawaii, 14-17 March 2010. Reston, Virginia, USA: American Society of Civil Engineers.

[3]B Sherwood (2008), What Will We Actually Do On the Moon? *Space Technology and Applications International Forum, STAIF-2007 Proceedings*. AIP #880, American Institute of Physics, ISBN 978-0-7354-0386-4.

[4]B Sherwood (2004). Progressive Protocol for Planetary Protection During Joint Human and Robotic Exploration of Mars (2004). IAC-04-IAA.3.7.2.10, 55th International Astronautical Congress, Vancouver.

[5]M Cohen (2000). Design Development Strategy for the Mars Surface Astrobiology Laboratory. SAE 2000-01-2344. 30th International Conference on Environmental Systems, Toulouse, July 10-13, 2000.

[6]VA (1995). *Research Laboratory Design Guide*, Department of Veterans Affairs, Veterans Health Administration, Office of Research & Development, Office of Facilities Management, Facilities Quality Office Standards Service, September 30, 1995. http://www.wbdg.org/ccb/VA/VADEGUID/lab.pdf

[7]D Watch, and D Tolat (2009). *Research Laboratory, Whole Building Design Guide*, National Institute of Building Sciences, http://www.wbdg.org/design/research_lab.php, last updated: 06-02-2009.

[8]B Griffin, D Smitherman (2008). Sizing the Lunar Habitat Diameter Sensitivity, LAT-Phase 2 Habitation Focus Element, ASCE Earth and Space Conference, Long Beach California, March 2008.