Design and Preliminary Thermal Performance of the Mars Science Laboratory Rover Heat Exchangers

A. J. Mastropietro[1], John Beatty[2], Frank Kelly[3], Gajanana Birur[4], Pradeep Bhandari[5], Michael Pauken[6], Peter Illsley[7], Yuanming Liu[8], David Bame[9], and Jennifer Miller[10]
Jet Propulsion Laboratory, California Institute of Technology, Pasadena, California, 91109

The challenging range of proposed landing sites for the Mars Science Laboratory Rover requires a rover thermal management system that is capable of keeping temperatures controlled across a wide variety of environmental conditions. On the Martian surface where temperatures can be as cold as -123°C and as warm as 38°C, the Rover relies upon a Mechanically Pumped Fluid Loop (MPFL) and external radiators to maintain the temperature of sensitive electronics and science instruments within a -40°C to 50°C range. The MPFL also manages significant waste heat generated from the Rover power source, known as the Multi Mission Radioisotope Thermoelectric Generator (MMRTG). The MMRTG produces 110 Watts of electrical power while generating waste heat equivalent to approximately 2000 Watts. Two similar Heat Exchanger (HX) assemblies were designed to both acquire the heat from the MMRTG and radiate waste heat from the onboard electronics to the surrounding Martian environment. Heat acquisition is accomplished on the interior surface of each HX while heat rejection is accomplished on the exterior surface of each HX. Since these two surfaces need to be at very different temperatures in order for the MPFL to perform efficiently, they need to be thermally isolated from one another. The HXs were therefore designed for high in-plane thermal conductivity and extremely low through-thickness thermal conductivity by using aerogel as an insulator inside composite honeycomb sandwich panels. A complex assembly of hand welded and uniquely bent aluminum tubes are bonded onto the HX panels and were specifically designed to be easily mated and demated to the rest of the Rover Heat Recovery and Rejection System (RHRS) in order to ease the integration effort. During the cruise phase to Mars, the HX assemblies serve the additional function of transferring heat from the Rover MPFL to the separate Cruise Stage MPFL so that heat generated deep inside the Rover can be dissipated via the Cruise Stage radiators. Significant fabrication challenges had to be overcome in order to make the HX design a reality. The cruise phase thermal performance of the Rover HXs was verified in the cruise phase system level thermal vacuum test that was performed at JPL in January of 2009. The Rover HXs were modeled in I-DEAS TMG and predictions are compared to actual data from the test.

Nomenclature

3-D	=	Three Dimensional
CHRS	=	Cruise Heat Rejection System

[1] Thermal Systems Engineer, Thermal and Cryogenic Engineering, Mail Stop 125-123.
[2] Mechanical Engineer, Instrument Mechanical Engineering, Mail Stop 126-347.
[3] Thermal Systems Engineer, Thermal and Cryogenic Engineering, Mail Stop 125-123.
[4] Thermal Systems Engineer, Thermal and Cryogenic Engineering, Mail Stop 125-123.
[5] Principal Engineer, Thermal and Cryogenic Engineering, Mail Stop 125-123.
[6] Thermal Systems Engineer, Thermal and Cryogenic Engineering, Mail Stop 125-123.
[7] Mechanical Systems Engineer, Spacecraft Mechanical Engineering, Mail Stop 303-410.
[8] Thermal Systems Engineer, Thermal and Cryogenic Engineering, Mail Stop 79-24.
[9] Thermal Systems Engineer, Thermal and Cryogenic Engineering, Mail Stop 125-123.
[10] Thermal Systems Engineer, Thermal and Cryogenic Engineering, Mail Stop 125-123.

CFC-11	=	Trichloromonofluoromethane 11 (also known as R-11 or Freon)
CS	=	Cruise Stage
DOE	=	Department of Energy
FEM	=	Finite Element Model
HRS	=	Heat Recovery and Rejection System
HX	=	Heat Exchanger
IDEAS TMG	=	Integrated Design and Engineering Analysis Software Thermal Model Generator
JPL	=	Jet Propulsion Laboratory
MLI	=	Multi Layer Insulation
MMRTG	=	Multi Mission Radioisotope Thermoelectric Generator
MPFL	=	Mechanically Pumped Fluid Loop
MSL	=	Mars Science Laboratory
NTE	=	Not to Exceed
NASA	=	National Aeronautics and Space Administration
PWR	=	Pratt and Whitney, Rocketdyne
RHRS	=	Rover Heat Recovery and Rejection System
S/C	=	Spacecraft
sol	=	Day on Mars (24.6 Earth hours in duration)

I. Introduction

National Aeronautics and Space Administration (NASA) has scheduled to launch its next Mars Rover mission during October 2011. The Mars Science Laboratory (MSL) Rover will be the largest rover ever launched to the Mars surface and has the largest number of science instruments ever carried by a Mars landed mission. The primary goal of the MSL mission is to determine the habitability of Mars, its capacity to support biological life, either past or present.

The success of the past Mars missions[1] in returning valuable science data has prompted NASA to explore Mars even more rigorously with rovers capable of operating over an entire Martian year (670 sols) and within any latitude on Mars between 30° North and 30° South *day or night*. Due to the inadequate amount of sunlight received at these landing sites during the Martian year, the use of solar panels for electrical power is not practical. A power source that can generate power continuously, irrespective of the season or time-of-day, is therefore required for such a mission. A new rover power source, called the Multi Mission Radioisotope Thermoelectric Generator (MMRTG), developed by NASA and the Department of Energy (DOE) is to be used onboard the MSL Rover. The MMRTG is essentially a radioisotope heat source that reliably converts heat into electricity. It produces about 110 Watts of consumable electrical power while generating waste heat equivalent to approximately 2000 Watts.

The addition of the MMRTG to the MSL Rover requires an advanced thermal control system that is able to both recover and reject the waste heat from the MMRTG as needed in order to maintain the onboard electronics at benign temperatures despite the extreme and widely varying environmental conditions experienced both on the way to Mars and on the Martian surface. Based on the previously successful Mars landed missions thermal control schemes,[2, 3] a Mechanically Pumped Fluid Loop (MPFL) architecture was selected as the most robust and efficient means for meeting the MSL thermal requirements. The MSL Heat Recovery and Rejection System (HRS) is comprised of two Freon (CFC-11) MPFLs that interact closely with one another to provide comprehensive thermal management throughout all mission phases. The first loop, called the Rover HRS (RHRS), consists of a set of pumps, thermal control valves, and Heat Exchangers (HXs) that enable the transport of heat from the MMRTG to the Rover electronics during cold conditions and from the electronics directly to the environment for heat rejection during warm conditions. The second loop, called the Cruise HRS (CHRS), is thermally coupled to the RHRS during the cruise to Mars and provides a means for dissipating the waste heat from the MMRTG and both the Cruise Stage and Rover avionics via the Cruise Stage radiators.

Previously published papers[4,5] have discussed the MSL mission phases, spacecraft elements and configurations, and the HRS architecture in detail. Key HRS thermal requirements, thermal design drivers, and thermal control valve and pump hardware development have already been presented[6, 7] and are outside the scope of this paper. This

paper instead focuses on the design, implementation, and preliminary thermal performance of the RHRS Heat Exchangers, the integral sub-element which provides the unique platform for simultaneous heat acquisition from the MMRTG, as well as heat rejection to the CHRS loop or Mars environment, depending upon the mission phase.

II. Dual Role of MSL RHRS Heat Exchangers

During the cruise to Mars, the Rover is embedded deep within an aeroshell as shown in Fig. 1. The Cruise Stage is mounted on top of the aeroshell and consists of the solar arrays used to harness power during this phase as well as ten radiator panels and the associated CHRS tubing and pumps required to safely reject approximately 2100 W due to the combined heat load of the MMRTG and onboard electronics.

Figure 2 shows the stowed Rover in the cruise configuration. The MMRTG is installed on the aft chassis panel of the Rover and is surrounded by two nearly identical RHRS HXs. The RHRS HXs are fabricated from composite honeycomb core sandwich panels with aluminum facesheets that have HRS tubing bonded to both sides. During the cruise phase of the mission, the CHRS loop is thermally coupled to the RHRS loop as shown in Fig. 3.

Figure 3 illustrates that there are Hot Plates for collecting heat from the MMRTG and Cold Plates for transferring heat to the CHRS. The RHRS HX assemblies that surround the MMRTG were designed to simultaneously serve both Hot Plate and Cold Plate functions. This dual role design requirement is inherently difficult to accommodate since in order for the RHRS loop to be efficient, the Hot Plates and Cold Plates should be thermally isolated from one another otherwise thermal shorts between them would reduce the effectiveness of the Hot Plates as heat absorbers and the Cold Plates as heat rejecters. Typically they are separate pieces of hardware that are not often collocated on a spacecraft bus. The interior facesheets of the RHRS HXs which face the MMRTG provide a means for collecting radiated heat from the MMRTG and function as the Hot Plates. The opposite exterior facesheets of the RHRS HXs serve as the Cold Plates by providing the surface area necessary to transfer heat between the RHRS tubes and the CHRS tubes during cruise as well as the surface area necessary to reject the avionics heat during landed operations. By design the Hot Plate side and the Cold Plate side of each HX assembly are thermally isolated from one another to meet the following requirements: 1) provide enough heat transfer from the Hot Plate to the Cold Plate to keep the Cold Plate fluid from freezing when its fluid flow is minimized during cold conditions, and 2) prevent

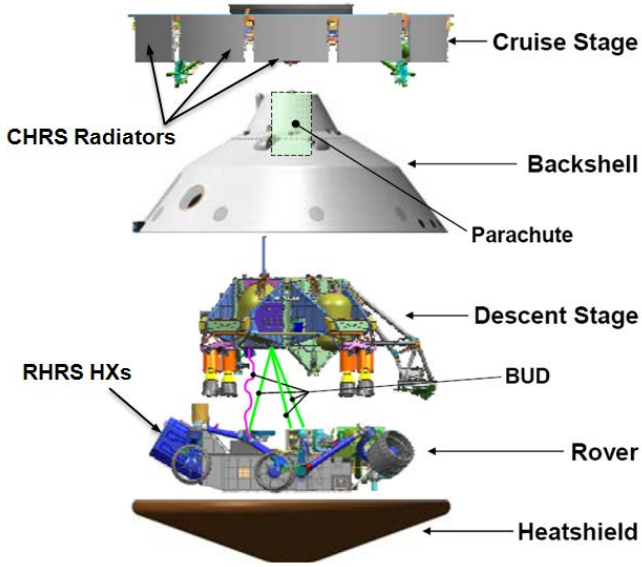

Figure 1. MSL Spacecraft in Cruise Configuration

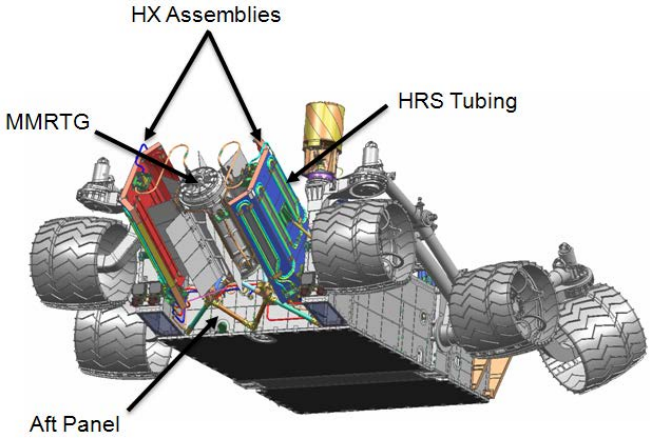

Figure 2. MSL Rover in Stowed Cruise Configuration Showing HXs Positioned on Both Sides of Finned MMRTG

excessive heat transfer from the Hot Plate to the Cold Plate which would reduce the heating available to the Rover electronics during cold conditions.

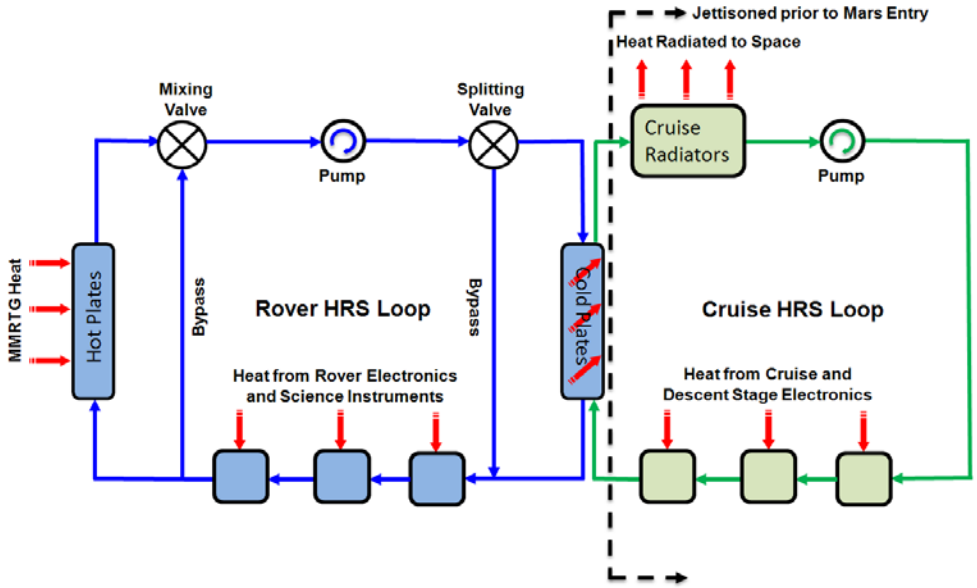

Figure 3. MSL HRS Flow Diagram During Cruise Phase

Immediately prior to Mars entry, the CHRS loop is vented, cut, and the Cruise Stage is jettisoned. Once on the surface of Mars, the Rover is deployed as shown in Fig. 4. The RHRS loop begins its independent operation by passively exercising its two thermal control valves (mixing valve and splitting valve) to vary flow as necessary between the two extreme hot and cold cases as shown in Fig. 5. The Cold Plates (exterior facesheets of RHRS HXs) now effectively function as radiators to the Martian atmosphere and ground. In the worst cold case, note that although the majority of the fluid flow bypasses the Cold Plates to minimize heat loss from the electronics and instruments, at least 4% of the fluid flow is continuously directed to the Cold Plates to prevent the Freon from freezing. The 4% is sufficient since there is also some parasitic heat loss from the Hot Plate sides by design. In the worst hot case, more than half of the flow bypasses the Hot Plates so that there is minimum heat gain from the MMRTG, and then the majority of the flow is directed to the Cold Plates for immediate rejection to the environment. Even in this extreme hot condition, at least 45% of the flow is required to be directed through the Hot Plates in order to prevent the MMRTG and Freon from overheating.

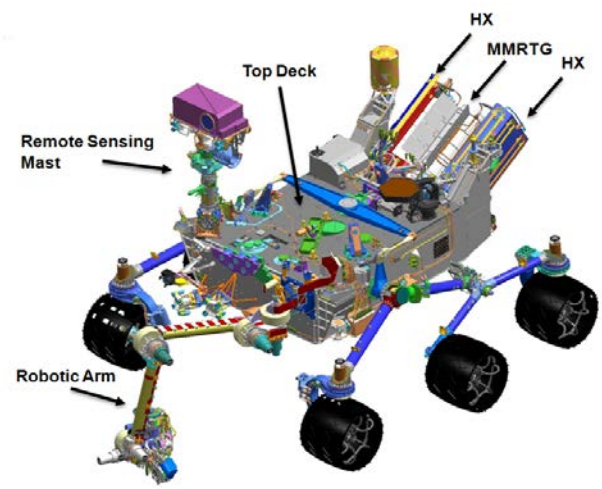

Figure 4. Deployed Rover Ready for Surface Operations

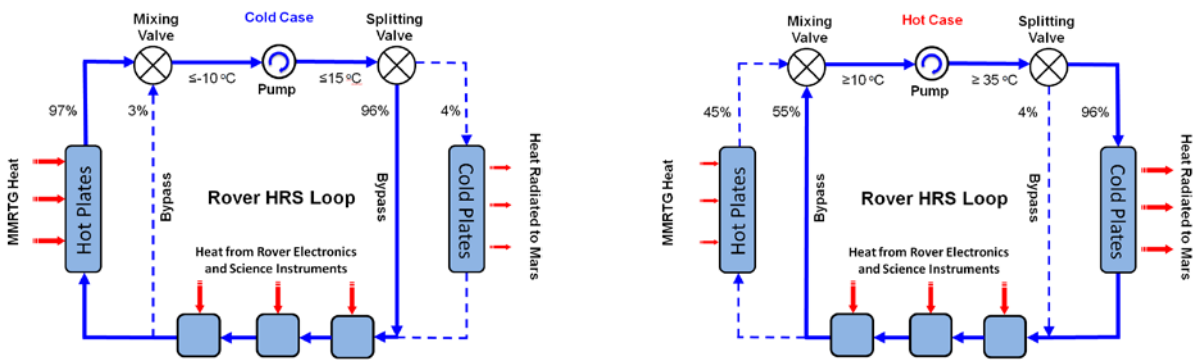

Figure 5. RHRS Loop Surface Phase Operation - Cold Case versus Hot Case

III. Historical Evolution of MSL RHRS Heat Exchangers

Early in the project design lifecycle, numerous design trades were made to develop the thermal architecture of the Rover HXs and radiators. The basic concept was to circulate a working fluid through the tubes on the HXs to collect the heat from the MMRTG and then through the tubes on the radiators to reject waste heat as required. Some trade issues included the following: 1) locating the radiators on the Top Deck, side panels, bottom panel and/or next to the Hot Plates, 2) the number (1 or 2), orientation (horizontal, vertical, or angled) of the Hot Plates, and 3) the method of coupling the Cold Plate to the Hot Plate (thermal switches versus fixed conductance).

It was found that the surface area of the Top Deck was insufficient to reject all the heat picked up by the MMRTG Hot Plates in the hot case analysis, so additional radiator area was needed. The side panels were blocked by mobility. The bottom panel would work except for cases when the Rover was parked at the same location for several days. In this case, the ground could heat up and essentially make the bottom radiator panel adiabatic. Furthermore, the bottom panel radiator would have to be resistant to scrapes from rocks. Consequently the only remaining location for additional radiator area was adjacent to the Hot Plates. Then it became a matter of how the radiators (or Cold Plates) were coupled to the system. Thermal switches were considered as a means of directly coupling the Hot Plates to the Cold Plates, such that in the hot case immediate heat rejection to the ambient environment could be readily achieved. This idea was deemed to be too complicated to implement and required some technology development work.

The other option was to couple the Cold Plates to the Hot Plates through a branch of the fluid loop since it merely required additional tubing and no technology development. This led to the unique multi-function design where both the HXs and the radiators were combined into a single structural element. Significant challenges and constraints were present from the outset while developing an optimum design for this proposed configuration. The design obviously needed to be efficient at both collecting waste heat from the MMRTG and rejecting waste heat to the Mars environment. Furthermore, it needed to meet several key requirements: 1) stay within the constraints of the Rover envelope, 2) meet Rover structural criteria, 3) provide a platform for easy routing of the RHRS tubes back and forth between the

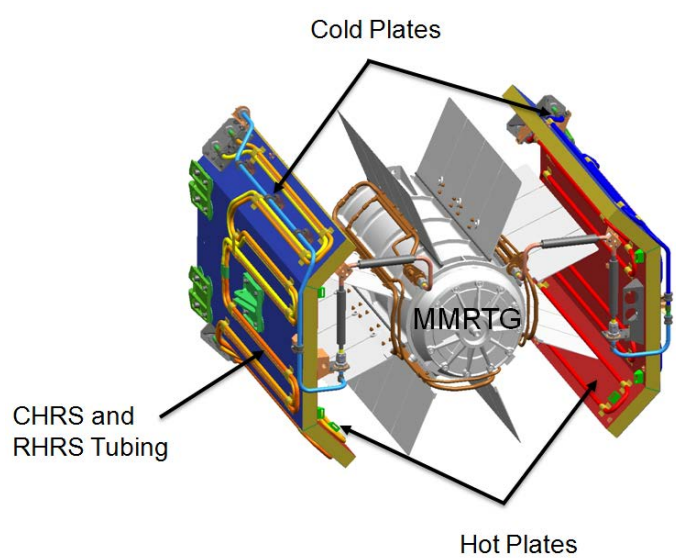

Figure 6. RHRS Heat Exchanger Assemblies, Red Facesheets-Hot Plates, Blue Facesheets-Cold Plates

HXs and the chassis, 4) demonstrate a method for reliable fabrication, 5) accommodate the necessary lengths of tubing for both the CHRS and RHRS on the Cold Plate and Hot Plate sides, and 6) incorporate the required thermal isolation between the Hot Plate and Cold Plate sides. The final developed configuration shown in Fig. 6 met all of these constraints.

IV. Design and Fabrication of MSL RHRS Heat Exchangers

As previously mentioned, there were several key design requirements for the MSL HXs: 1) a minimum surface area was specified for both Hot Plate and Cold Plate sides, 2) the through-panel thickness conductivity was specified to be 0.35 to 0.55 W/^{o}C at the coldest design point, 3) the in-plane thermal conductivity of the sandwich panel facesheets as determined by the product of facesheet thickness and material thermal conductivity was not to be less than 0.1 W/^{o}C, 3) the developed hardware was expected to survive temperatures ranging from -111 ^{o}C to 90 ^{o}C and perform properly with a maximum gradient of 60 ^{o}C between Hot and Cold plates, 4) the configuration had to maintain adequate clearance for installation of the MMRTG, and 6) the developed structure must withstand harsh launch loads.

As shown in Fig. 6, there are two nearly identical honeycomb sandwich panel HXs which surround the MMRTG and have HRS tubing bonded to both sides. The interior Hot Plates have a single set of RHRS tubing on them for MMRTG heat acquisition. The exterior Cold Plates have two adjacent sets of tubing on them, one for the CHRS loop and one for the RHRS loop, to permit liquid to liquid heat exchange between the loops during the cruise phase.

The mechanical and thermal design and fabrication effort for the sandwich panels is described next, followed by the design and fabrication of the HRS tubing assemblies that were bonded onto the sandwich panels.

A. Mechanical and Thermal Design of RHRS Heat Exchanger Sandwich Panels

The MSL Rover Heat Exchangers were fabricated at JPL during February to September of 2008. The most challenging requirements that drive the design for the MSL RHRS Heat Exchanger are high in-plane thermal conductivity and low through-thickness thermal conductivity. These two requirements determined the selection of the sandwich panel facesheet and core materials.

The high in-plane thermal conductivity requirement for the facesheets ensures that robust heat transfer between the fluid circuit and surrounding facesheet area will occur. The facesheet material selected, aluminum alloy, has a high thermal conductivity, high strength, low density, and is easily formed with simple tooling. A composite facesheet made from high-conductivity carbon fiber was originally considered because of its high in-plane thermal conductivity but dismissed because of the challenges associated with promoting efficient heat transfer perpendicular to the direction of the fibers.

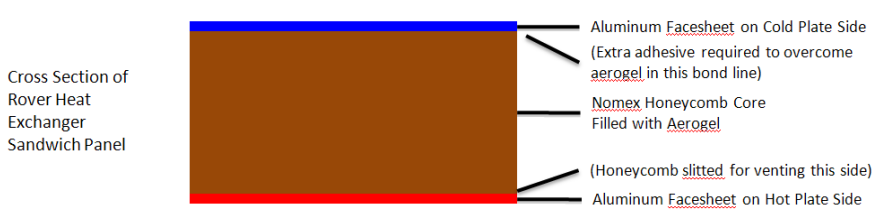

Figure 7. RHRS Heat Exchanger Sandwich Panel Lay Up

The through-panel conductivity requirement had the most influence on the design of the sandwich panels. The panels were required to have low through-thickness thermal conductivity in order to optimize heat transfer between the hot fluid circuit and cold fluid circuits. Nomex honeycomb core with 1/8 inch cell size was selected for low through-thickness thermal conductivity as compared to other core materials. While this core material has low

thermal conductivity, a significant amount of radiative heat transfer can occur between the facesheets through the open cells of the honeycomb. This heat transfer mode had to be suppressed in order for the HX design to function properly. Opaque (carbon filled) aerogel in a crushed powder form was implemented for this purpose. By filling the honeycomb core with particles of opaque aerogel, the optical path through the cells was blocked, and the radiative heat transfer path was virtually eliminated.

Figure 8. HX Assemblies after Hot Plate Side has Cured and Opaque Aerogel has been Installed

The advantage of aerogel for this application is its extremely low density, but its disadvantage is the fine powder contamination created in the bondline between the core and facesheet. Initial flatwise tensile tests demonstrated that the facesheet bond was the weakest link. To overcome this problem, the aerogel was installed in the sandwich panel assembly as late as possible to reduce the number of bondlines affected, and the amount of film adhesive in the bond between the honeycomb and facesheet was increased for the only remaining facesheet bondline exposed to the aerogel. The closeout facesheet bondline uses an extra adhesive layer to increase shear area and ensure adequate bondline strength. Flatwise tensile tests show that the facesheet bond exceeds the tensile strength of the honeycomb core material despite any aerogel inclusions in the bondline. There was an additional requirement for venting all the cells of the honeycomb core. This was accommodated by slitting all the cells on the Hot Plate side prior to facesheet bonding. Figure 7 depicts the sandwich panel lay-up. The panel construction process was broken into three distinct autoclave cure steps to accommodate the filling of the core with aerogel. The honeycomb core details were bonded into a shaped assembly in the first cure cycle. The Hot Plate was bonded to the honeycomb core assembly in the second cure cycle and then the honeycomb was packed with aerogel as shown in Fig. 8. The third and final cure cycle bonded the Cold Plate to the aerogel-filled assembly.

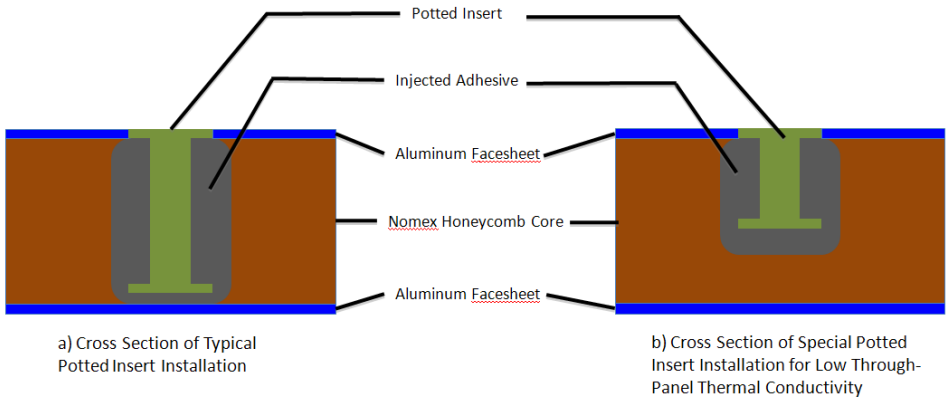

Figure 9. Typical Potted Insert Installation versus MSL HX Implementation

The through-panel thermal conductivity requirement affects not only the choice of materials but also the use of potted inserts. Typical insert installation (see Fig. 9a) creates a thermal short because the plug of adhesive is in contact with both the hot and cold facesheets. The MSL HX plate insert installation (see Fig. 9b) was tailored to limit the depth of the adhesive injection. This non-standard installation required extensive strength testing and thermal conductivity measurements to validate the design. The through-thickness thermal conductivity of the entire panel assembly was estimated in advance by determining the thermal conductivity contribution of each component of the panel construction. Thermal conductivity measurements in low pressure Mars-like CO_2 atmosphere were conducted using the Guarded Hot Plate method based on ASTM C-177[9]. The thermal conductivity of potted inserts

was calculated by first measuring conductivity of honeycomb core with an insert installed and then subtracting the measured thermal conductivity of the core alone. Figures 10 and 11 show the typical test setup and coupons implemented. The overall conductance of the panel was then estimated as the sum of the conductivities of all the materials present in the final design. Figure 12 shows that the conductivity of the honeycomb core dominates the overall conductivity of the panel. The lesser impact of the potted inserts on thermal conductivity shows the effectiveness of the insert custom potting method in reducing through-thickness thermal conductivity. Had full potting of the insert been used, the inserts would have used over 80% of the allowable through-panel conductivity budget.

The faceted shape of the HXs was the final concept selected after a number of design trades. There are two important drivers in the shape, size, and construction of the HX. First, high modal frequency was desired in order to avoid exciting modal frequencies elsewhere in the Rover structure. The next design driver was providing the proper thermal environment for the MMRTG. The view factor from the MMRTG to the Heat Exchanger needed to be maximized in order to allow the hot side of the heat exchangers to pick up a sufficient amount of radiated heat from the MMRTG. The contoured panel has higher modal frequency and better stiffness than a flat panel. The original concept was a cylindrical curved panel. The design was changed to include 45 degree angled sections to make the manufacturing simpler for both production of the panel and production/installation of the HRS tubing. The curved cylindrical shape is more of a challenge when working with traditional honeycomb. It could have been made to work with a special type of honeycomb known as flexcore or overexpanded core, but instead the more simplified design approach, whereby the panel was to be built from flat panels with bends, was selected. The final design requires just three honeycomb core details to be cut for assembly. The honeycomb is spliced using foaming core splice adhesive. This adhesive expands to four times its original volume to fill the area between two adjacent slabs of honeycomb core. The cure of the honeycomb splice adhesive is performed on the same mold used to build the final sandwich panel.

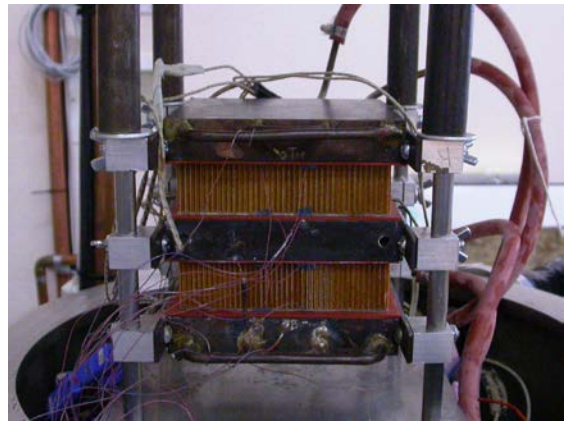

Figure 10. Side View of ASTM C-177 Guarded Hot Plate Test

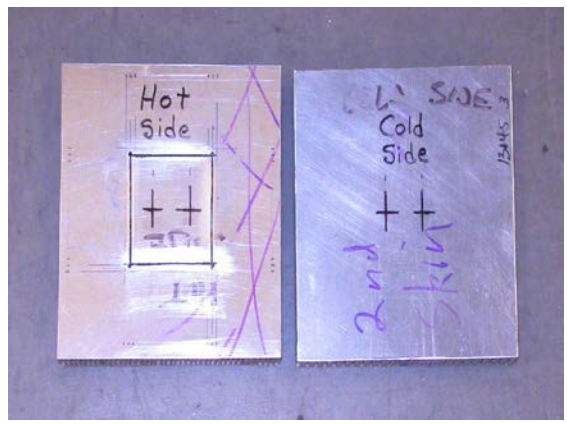

Figure 11. Thermal Conductivity Test Coupons

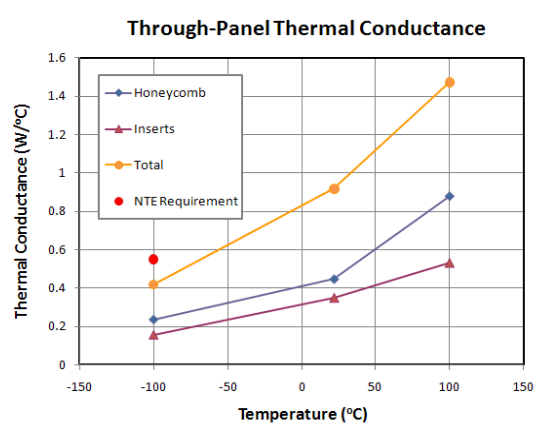

Figure 12. Through-Panel Thermal Conductance

B. Mechanical and Thermal Design of HRS Tubing

The principal design considerations for the HX tubing assemblies were: 1) effective heat transfer between the working fluid and facesheets after bonding, 2) high thermal conductance between the RHRS and CHRS tubes on the Cold Plates, 3) ease of integration to the rest of the RHRS loop, 4) material compatibility with the working fluid, 5) structural integrity despite the many welds required to complete the lengthy assemblies, and 6) stringent low leak rate and high cleanliness criteria.

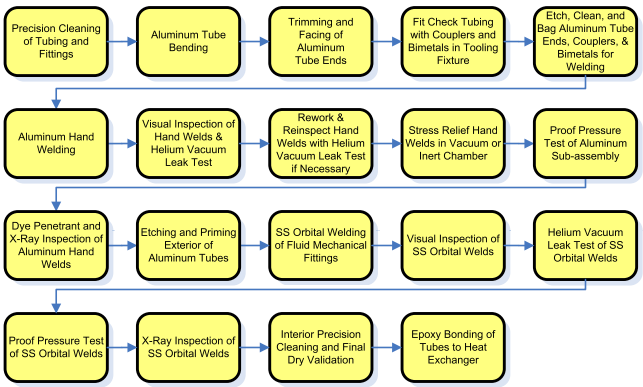

Figure 13. HRS Tubing Process Flow Diagram

The HRS tubing material was selected to be aluminum in the areas where efficient heat exchange was necessary and stainless steel for higher strength and ease of orbital welding in the adiabatic sections and at sections where fluid mechanical field joints were implemented to facilitate assembly and integration. Freon chemical compatibility life tests were performed with these HRS tubing materials, and no problems were identified[6]. Figure 13 shows the extensive fabrication process that was implemented for the HX tubing assemblies.

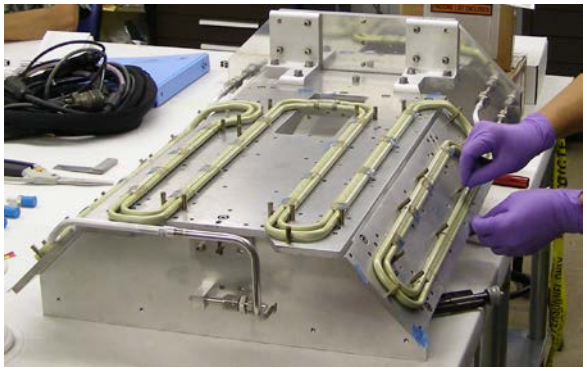

Figure 14. Cold Plate Tubing Resting on its Tooling Jig

1. Bending, Trimming, Facing, Tooling Fit Check

Bending the 3-D tubing geometry was fairly complicated and required a manual rotary draw tube bending process and well designed tooling jigs with extremely tight tolerances for fit checking and ensuring that assemblies would interface correctly with the rest of the RHRS loop once welded. Attempts to bend tubing with a digital CNC machine were found not to meet required tolerances. The importance of a well designed tooling jig for the HX tubing assemblies cannot be overstated. Without accurate tooling, the HX tubing assemblies could not have met their geometrical constraints, nor could proper fit up and subsequent welding of the assemblies occur. Figure 14 shows the nearly complete Cold Plate tubing assembly on its tooling jig.

2. Aluminum Hand Welding

The tube ends which were to be welded by hand, along with the couplers and bimetals which provided socket joints, were cleaned and etched in preparation for hand welding. It is very important to remove any oxidation from the tubing that can cause inclusions and impurities inside the weld. Hand welds were extremely difficult to perform and required extensive practice before consistency could be achieved. Each aluminum hand weld had to pass visual inspection, dye-penetrant inspection, X-ray, and two helium leak tests prior to being accepted for flight. Hand welds were also stress relieved at elevated temperature in an autoclave prior to proceeding with the stainless steel orbital welding of the fluid mechanical end fittings. Again, the tooling jig provided a structure to align and support the assembly during welding along with the clearance for the weld technician to access the area.

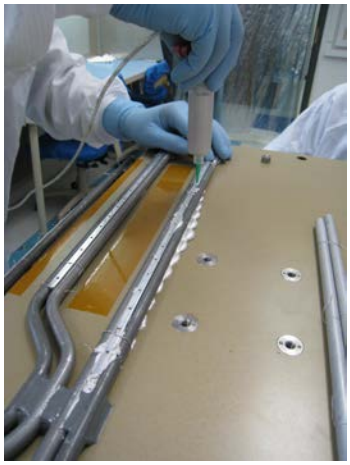

Figure 15. Injection Bonding of HRS Tubing and Thermal Wedges to Cold Plate HX

3. Etching and Priming of Tubing Exterior

In preparation for bonding the tubes to the HX sandwich panels, the aluminum tubes were transferred to lightweight support fixtures which were then dipped in a series of cleaning, rinsing, and etching tanks to remove oxidation and clean the surfaces. The tubes were then spray painted with a very thin layer of primer and subsequently cured at elevated temperature in order to provide the necessary surface treatment for bonding.

4. Stainless Steel Orbital Welding

Omnisafe fluid mechanical fittings were welded onto the end of each tubing assembly for integration with the rest of the RHRS loop. Omnisafe fittings were selected due to their low leak rate and anti-torque features which prevent torsion from being introduced to the delicate HRS tubing during torquing of the fittings. An inertially welded aluminum-to-stainless-steel bimetal transition was used to accommodate welding of the stainless steel fluid fittings. The tooling jig provided precise location for the end points of the fittings to ensure that the assembly would mate properly once installed on the S/C.

5. Interior Precision Cleaning and Final Dry

These assemblies were precision cleaned with a multi-stage process to ensure interior cleanliness and minimize the risk of particulates being introduced to the pump. Particle counts were verified by flushing the interior with alcohol. Hydrocarbon and dewpoint measurements were taken to validate cleanliness and dryness. Freon is hydroscopic, so moisture is considered the main contaminant since Freon with water is corrosive to aluminum tubes. Tube sub-assemblies were capped after cleaning until S/C installation.

6. Bonding and Thermal Wedge Implementation

Epoxy was first injected and cured at the ends of the straight sections of tubes as a means for rigidly fixing the position of the HRS tubing prior to thermal bond installation. This epoxy is meant to provide peel resistance and high strength attachment. On the Cold Plate side, aluminum thermal wedges were implemented between the RHRS and CHRS tubing in order to enhance the heat transfer between both loops. The wedges were designed to saddle each tube and minimize the void space between them. A thermal epoxy was injected into the voids between the wedges and tubes as shown in Fig. 15. Many test coupons were made in order to perfect the process of adequately filling all the voids. A clear conformal coat was then brushed over the thermal epoxy bond line after it was cured in order to deter any flaking of the epoxy. The clear overcoat also allows visual inspection of the underlying epoxy bond line for integrity. The completed HX assemblies are shown in Figs. 16-18.

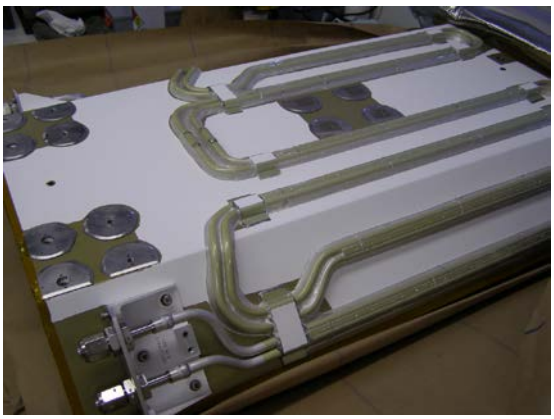

Figure 16. Completed HX Assembly Awaiting Install on Rover (Cold Plate Side Shown)

Figure 17. HXs as Installed on Aft Panel of Upside Down Rover Chassis

Figure 18. MMRTG Point of View of HXs

V. Thermal Model of the MSL MMRTG and RHRS Heat Exchanger Assemblies

Thermal modeling of the HXs was critical to the design and validation effort. Thermal models of the MSL Spacecraft and Rover were built using IDEAS TMG. The finite element model (FEM) of the Rover and MMRTG is shown below in Fig. 19. The MMRTG thermal model developed at JPL is based on a reduced thermal model delivered to JPL by the MMRTG vendor, Pratt and Whitney Rocketdyne (PWR).

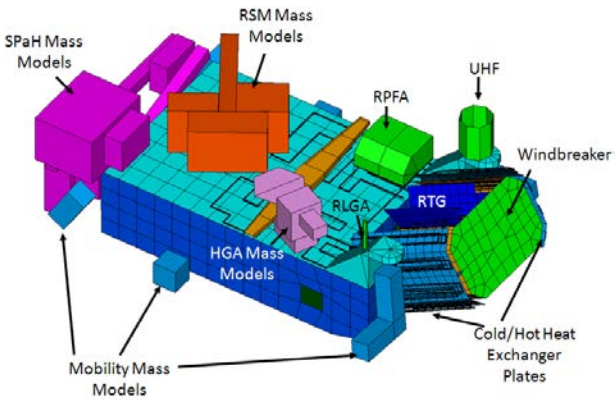

Figure 19. Rover and MMRTG FEM

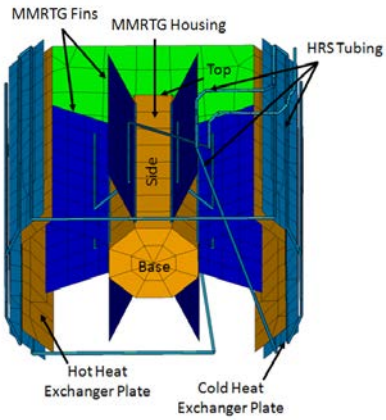

Figure 20. MMRTG Housing, Fins, and HXs

The simplified JPL thermal model of the MMRTG includes a single node to represent the core of the MMRTG. The core node dissipates approximately 2000 W and has a mass of approximately 30 kg and is connected to the more finely meshed MMRTG housing through three thermal resistors. One resistor connects the core to the side of the cylindrical housing, another to the top of the housing, and the third to the base of the housing. The MMRTG housing FEM is shown in Fig. 20. The housing is then conductively coupled to 8 circumferentially attached fins, and the bases of the fins are conductively coupled to the CHRS.

The MMRTG radiates to the two HXs on either side of the MMRTG housing. The Hot Plates and Cold Plates are thermally isolated from one another. The HX FEMs are also shown in Fig. 20. The Hot Plate HX is conductively coupled to the RHRS and the Cold Plate HX is conductively coupled to both the CHRS and RHRS. The thermal model contains logic to operate the two RHRS bypass valves. Note that the CHRS system has no flow rate control valves.

The MMRTG and HX thermal models were verified in the MSL Cruise Phase System Thermal Vacuum Test conducted in January of 2009. During the test the MSL spacecraft was in its cruise configuration, as shown in Fig. 21. The test was performed in JPL's 25 ft. space simulator. The test included both solar simulation with xenon arc lamps and deep space simulation with liquid nitrogen shrouds.

Figure 21. MSL Spacecraft in Cruise Configuration in JPL's 25 ft. Solar Simulator

Two steady state flight scenarios were simulated during the test: a near Earth, early cruise simulation, and a near Mars, late cruise simulation. Temperatures were monitored with thermocouples that were installed on crucial parts of the spacecraft. Comparisons of the MMRTG and HX thermocouple temperatures to the temperature predictions from the thermal model are shown in Figs. 22-24.

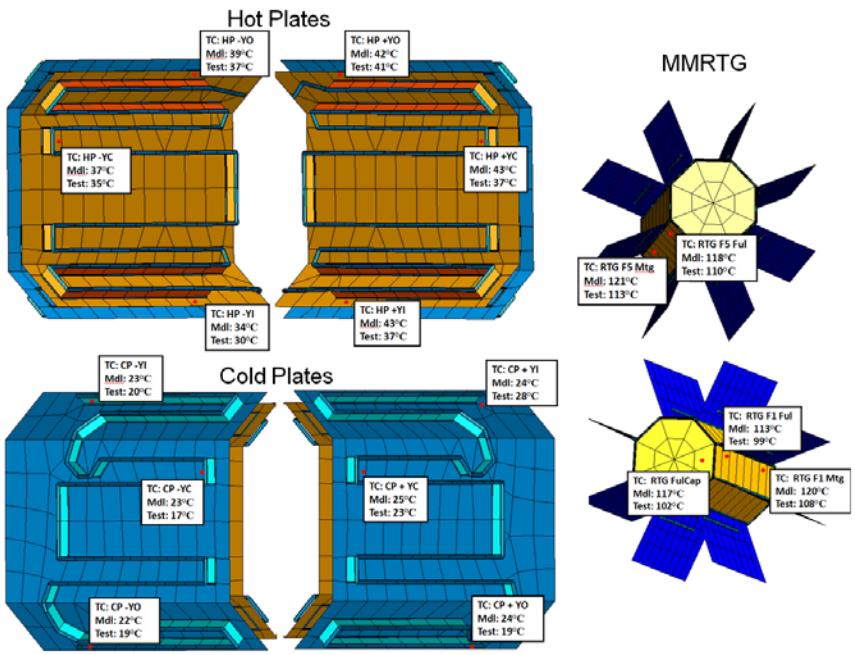

Figure 22. Comparison of Modeling Results to Test Data for Near Earth Simulation (Hot Case)

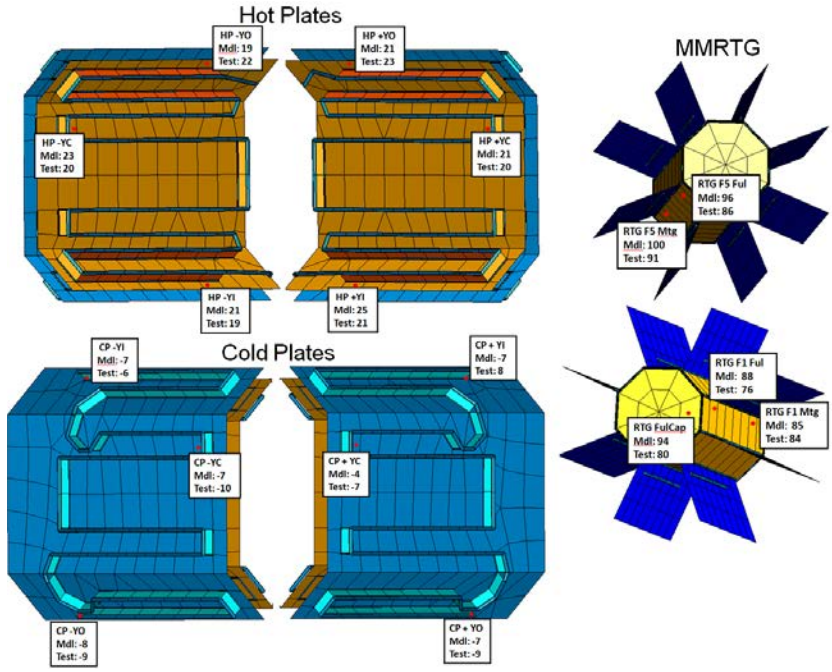

Figure 23. Comparison of Modeling Results to Test Data for Near Mars Simulation (Cold Case)

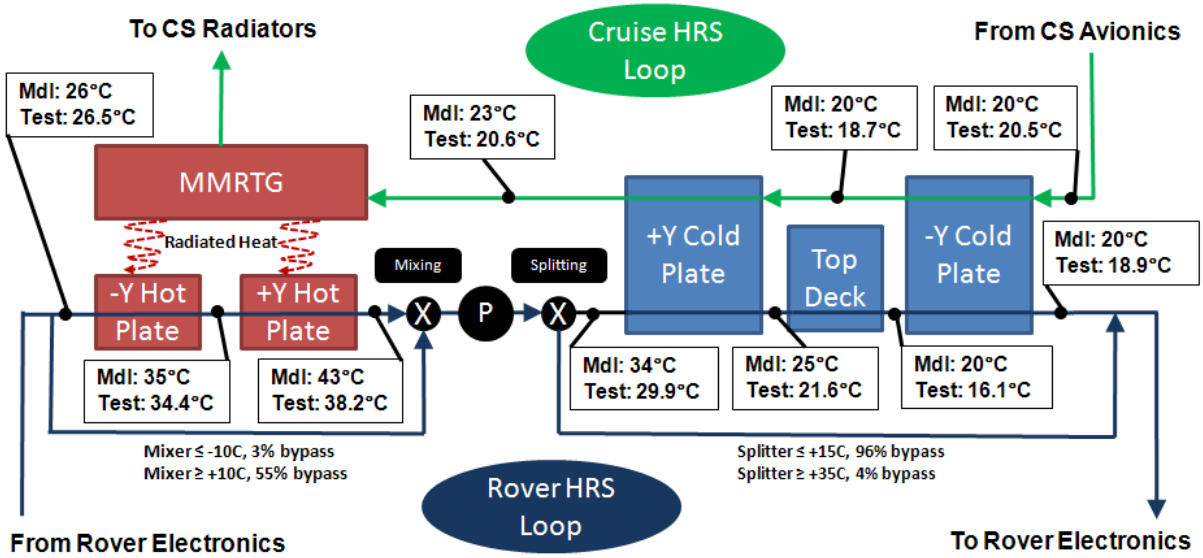

Figure 24. Comparison of HX Modeling Results to Test Data, Hot Case

In general, the thermal model temperatures correlated well with the test results. The average difference between the model and test temperatures was 5°C. The HX FEMs correlated with the test results better than the MMRTG FEM. The HX FEM's temperatures differed from the test results by just a few degrees, while the MMRTG FEM's temperatures differed from the test results by around 10°C. The difficulty in correlating the MMRTG model with test temperatures could be due to the large temperature gradients on the MMRTG.

Figure 24 overlays the model predictions with test data for the fluid line temperatures on a more detailed flow diagram that focuses on the performance of the Hot Plates and Cold Plates. While the predictions are in good agreement with the test data (within 5°C), a larger issue is revealed. Upon closer inspection, it is apparent that there was minimal liquid to liquid heat transfer between the RHRS and CHRS loops at the Cold Plate interface. The test data showed that there was only a 0.1°C difference in temperature between the Cold Plate inlet and outlet temperatures on the CHRS loop. This outcome was somewhat surprising since the liquid to liquid heat exchanger was thought to be absolutely necessary for effectively dissipating the heat from the Rover during the cruise phase. Further data analysis reveals that there is significant radiative heat loss to the Backshell that accounts for this result. A short review of the HX design process is also helpful in understanding this effect.

During the early phase of the MSL project when the HX was conceived, architected, and designed, the Cold Plates alone could not be conservatively relied upon to serve as the primary radiators to dissipate the Rover internal heat during the cruise phase. The only potential heat sinks available early in the design process were the Backshell and the Heat Shield. From the outset, the Heat Shield was to be covered with Multi Layer Insulation (MLI) to conserve heat for the Descent Stage during the early phases of the mission; hence, it was not an effective radiative heat sink option. The Backshell design was still evolving while undergoing iterations of having MLI versus not having MLI. In addition, the architecture and detailed design of the whole spacecraft was in its infancy so an accurate knowledge of its temperature distribution was not yet available to assess what portion of the structure could serve as an effective heat sink.

In light of this lack of temperature knowledge and the need for a robust design that could proceed forward while remaining viable throughout the detailed design and implementation phases of MSL, it was decided early on to not rely on radiative heat loss from the Cold Plates as being the primary means to dissipate heat from Rover during the cruise phase. The presence of the easily accessible cruise loop that had cold fluid available during both cruise and launch presented an attractive and robust heat sink option for the Rover's waste heat. A relatively simple tube to tube HX between the two HRS loops would serve this purpose. In conservative fashion, the tube to tube HX design

assumed that no credit was taken for any parasitic radiative heat loss from the outer surface of the Cold Plates to the Backshell (adiabatic boundary condition). While this design approach guaranteed a robust design, it carried with it a "risk" of being possibly too conservative if the Backshell turned out to be colder than anticipated. But it was recognized that this approach was far smarter than prematurely relying solely upon the radiative heat loss to the Backshell, which may or may not have been sufficient.

Once the entire spacecraft underwent the detailed design phase, the complete configuration was analyzed using a very detailed and sophisticated thermal model of the whole spacecraft. The predictions confirmed that a significant portion of the Rover heat being dissipated by the Cold Plate was parasitically removed by radiation to the Backshell which was indeed predicted to be cold enough to serve as an effective heat sink. Subsequent testing confirmed the predictions to be true and proved that the tube to tube HX exceeded its original intent since the final requirements of heat load on it were definitely much lower than what it was designed for.

In April of 2011, the Rover will be tested again, this time in the surface configuration. After completion of the surface test, the MMRTG and HX thermal models will be further refined using data from the surface test. The correlated thermal model of the MMRTG and HX plates will be used to validate flight environments that could not be tested in the thermal vacuum chamber (off-axis solar angles, atmospheric entry, short-term spacecraft maneuvers, etc.). In addition, the correlated thermal model will be used towards development of a model for flight operations.

VI. Conclusions

The HXs developed for the MSL Rover have a unique configuration and design. There were many constraints and several challenging requirements that had to be overcome. Several new processes in the areas of angled sandwich panel manufacturing, tube bending and bonding in three dimensions, and fabricating potted inserts with low thermal conductance were developed. Various tests were conducted on the processes to ensure they met MSL Rover requirements. The results from the thermal analysis of the HXs for several cruise environmental conditions were compared with actual system thermal vacuum test data. There was good correlation between the test and analysis indicating that the HXs exceeded the thermal and mechanical requirements with adequate margins.

Acknowledgements

The development described in this paper was carried out at the Jet Propulsion Laboratory, California Institute of Technology, under a contract with the National Aeronautics and Space Administration. The authors express their thanks to the Mars Science Laboratory Rover project sponsored by NASA for supporting this effort. The authors also wish to thank several of their colleagues at JPL who were instrumental to making the HXs a reality: Saverio D'Agostino, Joe Mora, Vinnie Dang, Jim Dodge, Bill Castillo, Ray Higuera, David Soules, Shaun Stott, Jerry Gutierrez, Tuan Nguyen, Curtis Tucker, Chris Porter, Poyan Bahrami, Lou Luong, Choon Ng, Michael Saeger, Arseola Peacock, Eric Oakes, Bill Pearson, John Guest, Mike Fine, and Lon Chen. Mauro Prina and Brenda Hernandez (currently at Space X, Hawthorne, California) supported this task before leaving JPL in 2008. The authors also thank Jackie Lyra, MSL Thermal Subsystem Product Delivery Manager, for her support and encouragement during the course of this task and several vendors who supported the fabrication of the HXs including Astropak, CedTech, Eric Robinson of Omnisafe, One Way Manufacturing, and Aviation Equipment.

References

1. Novak, K., Phillips, C., Sunada, E., and Kinsella, G., "Mars Exploration Rover Surface Mission Flight Thermal Performance," SAE 2005-01-2827, 35th International Conference on Environmental Systems, Rome, Italy, July 2005.
2. Bhandari, P., Birur, G. C., and Gram, M. B., "Mechanical Pumped Cooling Loop for Spacecraft Thermal Control," SAE Technical Paper No. 961488, 26th International Conference on Environmental Systems, Monterey, California, July 8-11, 1996.

3. Birur, G. C., and Bhandari, P., "Mars Pathfinder Active Heat Rejection System: Successful Flight Demonstration of a Mechanically Pumped Cooling Loop," SAE Technical Paper No. 981684, 28th International Conference on Environmental Systems, Danvers, Massachusetts, July 13-16, 1998.
4. Bhandari, P., Birur, G., Pauken, M., Paris A., Novak, K., Prina, M., Ramirez, B., and Bame, D., "Mars Science Laboratory Thermal Control Architecture," SAE 2005-01-2828, 35th International Conference on Environmental Systems, Rome, Italy, July 2005.
5. Bhandari, P., Birur, G., Karlmann, P., Bame, D., Liu, Y., Mastropietro, A., Miller, J., Pauken, M., Ganapathi, G., Krylo, R., and Kinter, B., "Mars Science Laboratory Mechanically Pumped Fluid Loop for Thermal Control – Design, Implementation, and Testing," SAE 2009-01-2437, 39th International Conference on Environmental Systems, Savannah, Georgia, USA, July 2009.
6. Birur, G., Bhandari, P., Prina, M., Bame, D., Yavrouian, A., and Plett, G., "Mechanically Pumped Fluid Loop Technologies for Thermal Control of Future Mars Rovers," SAE 2006-01-2035, 36th International Conference on Environmental Systems, Norfolk, Virginia, July 2006.
7. Birur, G., Prina, G., Bhandari, P., Karlmann, P., Hernandez, B., Kinter, B., Wilson, P., Bame, D., and Ganapathi, G., "Development of Passively Actuated Thermal Control Valves for Passive Control of Mechanically Pumped Single-Phase Fluid Loops for Space Applications," SAE 2008-01-2002, 38th International Conference on Environmental Systems, San Francisco, California, July 2008.
8. Paris, A., Fisher, M., Kelly, F., Hernandez, B., Dudik, B., Krylo, R., Bhandari, P., "Thermal Design of the Mars Science Laboratory Powered Descent Vehicle," SAE 08ICES-0311, 38th International Conference on Environmental Systems, San Francisco, California, July 2008.
9. ASTM C-177, Standard Test Method for Steady-State Heat Flux Measurements and Thermal Transmission Properties by Means of the Guarded-Hot-Plate Apparatus.