PHyTIR - A Prototype Thermal Infrared Radiometer

Jau, Bruno M., Hook, Simon J., Johnson, William R., Foote, Marc. C., Paine, Christopher G., Pannell, Zack W., Smythe, Robert F., Kuan, Gary M., Jakoboski, Julie K., Eng, Bjorn T.
Jet Propulsion Laboratory
California Institute of Technology
4800 Oak Grove Dr.
Pasadena, CA 91109
818-354-1875
bjau@jpl.nasa.gov

Abstract—**This paper describes the PHyTIR (Prototype HyspIRI Thermal Infrared Radiometer) instrument, which is the engineering model for the proposed HyspIRI (Hyperspectral Infrared Imager) earth observing instrument. The HyspIRI mission would be comprised of the HyspIRI TIR (Thermal Infrared Imager), and a VSWIR (Visible Short-Wave Infra-Red Imaging Spectrometer). Both instruments would be used to address key science questions related to the earth's carbon cycle, ecosystems, climate, and solid earth properties. Data gathering of volcanic activities, earthquakes, wildfires, water use and availability, urbanization, and land surface compositions and changes, would aid the predictions and evaluations of such events and the impact they create.**

Even though the proposed technology for the HyspIRI imager is mature, the PHyTIR prototype is needed to advance the technology levels for several of the instrument's key components, and to reduce risks, in particular to validate 1) the higher sensitivity, spatial resolution, and higher throughput required for this focal plane array, 2) the pointing accuracy, 2) the characteristics of several spectral channels, and 4) the use of ambient temperature optics.

The PHyTIR telescope consists of the focal plane assembly that is housed within a cold housing located inside a vacuum enclosure; all mounted to a bulkhead, and an optical train that consists of 3 powered mirrors; extending to both sides of the bulkhead. A yoke connects the telescope to a scan mirror. The rotating mirror enables to scan- a large track on the ground. This structure is supported by kinematic mounts, linking the telescope assembly to a base plate that would also become the spacecraft interface for HyspIRI. The focal plane's cooling units are also mounted to the base plate, as is an overall enclosure that has two viewing ports with large exterior baffles, shielding the focal plane from incoming stray light. PHyTIR's electronics is distributed inside and near the vacuum enclosure, and in a nearby rack. The data acquisition technique would be to take measurements over a 51deg wide swath in the cross spacecraft velocity direction, which is brought into view through the rotating scan mirror. A landscape mosaic thus can be assembled by overlaying rows of measurements.

The paper briefly outlines the proposed HyspIRI mission and its data acquisition technique; it then describes the prototype PHyTIR instrument.

TABLE OF CONTENTS

1. INTRODUCTION 1
2. SCIENCE BACKGROUND.....1
3. PHYTIR'S KEY TECHNOLOGY ITEMS.....2
4. SCIENTIFIC REQUIREMENTS, INSTRUMENT SPECIFICATIONS 2
5. SENSING TECHNIQUE.....2
6. INSTRUMENT DESCRIPTION.....2
7. SUMMARY 9
BIOGRAPHY 11
ACKNOWLEDGEMENT 11

978-1-4673-1813-6/13/$31.00 ©2013 IEEE

1. INTRODUCTION

The HyspIRI mission was one of 14 missions identified by the National Research Council for implementation by NASA. It would consist of two instruments; one being the multispectral HyspIRI-TIR, being described in this paper, the other the VSWIR.

NASA's Jet Propulsion Laboratory (JPL) is in the process of developing the laboratory prototype of the TIR instrument, called PHyTIR. The goal for this prototype is to enhance the current state of the art in the four key technology areas mentioned below, to demonstrate the reliability and adequate performance of these key technology items, to elevate the overall development to Technology Readiness Level (TRL) 6, which is necessary as precursor for the flight instrument, and to reduce risk for the flight mission.

The HyspIRI radiometer would provide the first ever global measurements of the infrared radiance of the Earth in 8 spectral channels with a spatial resolution of 60m, and a time resolution of 5 days. The HyspIRI data would be used to address a set of key science questions related to the Earth's climate and surface properties.

2. SCIENCE BACKGROUND

HyspIRI would take data predominantly over land and in coastal regions. Each area under investigation would be re-visited at least every 5 days. The instrument would provide sensory data over 8 spectral channels with 7 bands between 7.5 and 12µm, and 1 band at 4µm. In orbit earth science measurements would enable climate studies regarding the following important scientific issues:

1) Volcanoes/Earthquakes
Would help to predict and mitigate volcanic hazards and

earthquakes through detection of transient thermal phenomena.

2) Wildfires
Would provide answers about the impact of global biomass burning on the terrestrial biosphere and atmosphere, and how its impact is changing over time.

3) Water Use and Availability
Would enable to investigate how the consumptive use of global freshwater supplies responds to changes in climate and demand, and how sustainable models for water resource management should be constructed.

4) Urbanization/Human Health
Would lead to characterizations about how the effects of urbanization affect the local, regional and global environment, and how to mitigate its impact on human health and welfare.

5) Earth Surface Composition and Change
Would measure compositions and temperatures of the exposed surface of the Earth and changes thereof, and how these changes over time affect land use and habitability.

3. PHyTIR's Key Technology Items

The proposed instrument requires a high sensitivity and high throughput Focal Plane Array (FPA), combined with a scanning mechanism that requires stringent pointing knowledge. The scanning approach, and the high sensitivity and high throughput FPA, are required to meet the 5 day revisiting time, the high spatial resolution of 60m/pixel, and the processing capability of the 8 spectral channels. The prototype is designed to demonstrate the following four key technologies:

1) The detectors and readouts can meet all signal-to-noise and speed specifications
Demonstrate that the FPA can be read out in sufficient time, and with the necessary sensitivity to meet the noise-equivalent temperature difference requirement of 0.2K, and pixel size requirement of 60m while scanning.
Verification Method: use a blackbody calibration target at various temperatures.

2) The scan mirror, together with the structural stability, can meet the pointing knowledge requirements
Demonstrate that the scene can be scanned with sufficient pointing knowledge that the data can be geo-located without the need to use ground control points.
Verification Method: use a target projector with vertical and horizontal slits.

3) The long-wavelength channels do not saturate below 480K
Demonstrate that hot targets can be measured with the channel not saturating below 480K.
Verification Method: use a blackbody calibration target from ambient to 500K.

4) The cold shielding allows the use of ambient temperature optics without impacting instrument performance
Demonstrate that the newly developed cold shielding minimizes the optical component contributions that otherwise would negatively impact the instrument's performance.
Verification Method: use a hot black body calibration target.

4. Scientific Requirements, Instrument Specifications

The HyspIRI mission is planned for 4 years of space operations; it would orbit at a nominal altitude of 623km above the earth. The instrument would scan the ground in the cross velocity direction to the spacecraft forward motion; the swath width would be 596km, which is equivalent to an instrument viewing angle of 51 degrees. The ground resolution should be 60m/pixel at a sampling rate of 32.5μsec per image, requiring a mirror scan rate of 14.15deg/sec. The resolution and sampling rates require a scanning system with pointing knowledge of 2arc-sec to synchronize the viewing sequence with the sensitive high speed focal plane array. Table 1 presents a summary of the most important requirements.

5. Sensing Technique

The HyspIRI instrument concept and scanning approach are shown in Fig. 1. The instrument would utilize a rotating scan mirror that allows the telescope to view a cross-track ground strip as the instrument's view rotates over the 51° viewing angle. For re-calibration purposes, the instrument can also view an internal blackbody calibration target; and black space made visible through a Limb port hole.

Fig. 2 provides details of the scanning technique: While the spacecraft moves forward in the indicated direction, the ground is viewed with the sensor array of 8 channels, each with a linear array of 256 pixels per channel. The view migrates to the left where it covers a swath of 596km on the ground while the view migrates over a 51deg viewing angle. With a pixel size that translates to 60m of ground distance at Nadir, the image per swath will have a resolution of 9937 pixels.

6. Instrument Description

HyspIRI vs. PHyTIR
The instrument description given below is for the PHyTIR prototype. The main differences to the HyspIRI flight instrument would be:

1) The HyspIRI flight detector would have 8 channels.

PHyTIR uses only three spectral channels with wavelengths of 4, 8.28 and 12µm, representing the full spectral range of HyspIRI. These 3 channels allow full performance testing and characterization of the proposed flight sensing system.

2) The two cryocoolers used on PHyTIR would be replaced by a single liquid nitrogen dewer. The currently used cryocoolers enable all key components to be tested within the scope of this project.

Table 1. Key Parameters for the proposed HyspIRI Mission

Orbital parameters	
Altitude	623km
Ground resolution	60m/pixel (@ Nadir)
Revisit	every 5 days
Coverage	Land and coastal regions
Swath width	596km
Cross track pixels	9287 pixels
NADIR view sweep time	0.296s
Optical/Instrument parameters	
Focal Length	415.3mm
Aperture Size	207.7mm
Aperture	F/2
IFOV	96.308 mrad (single pixel)
FOV	1.413o (along-track scanning)
FOV	51o (cross-track scanning)
Dwell time	32.5msec
Scan mirror rotation rate	14.15rpm (double sided scan mirror)
Spectral coverage (passband)	4 to12mm
Focal plane parameters	
Detector material	HgCdTe
Pixel pitch	40mm
Frame rate	31.25KHz
Pixel readout rate	256Mpixels/s
Saturation temperature (LWIR)	500K
FPA operating temperature	60K
Absolute accuracy	0.5K
Number of outputs	32
Speed per port	12.5MHz
Number of spatial pixels per spectral band	256
Number of filters	8 for HyspIRI, 3 for PHyTIR
Digitization	14-bits (off-chip digitization)
Optical assembly	
Telescope and relay	3 aspheric mirrors
Fold and scan	2 flat mirrors
Transmissive element	"Butcher block" interference filters

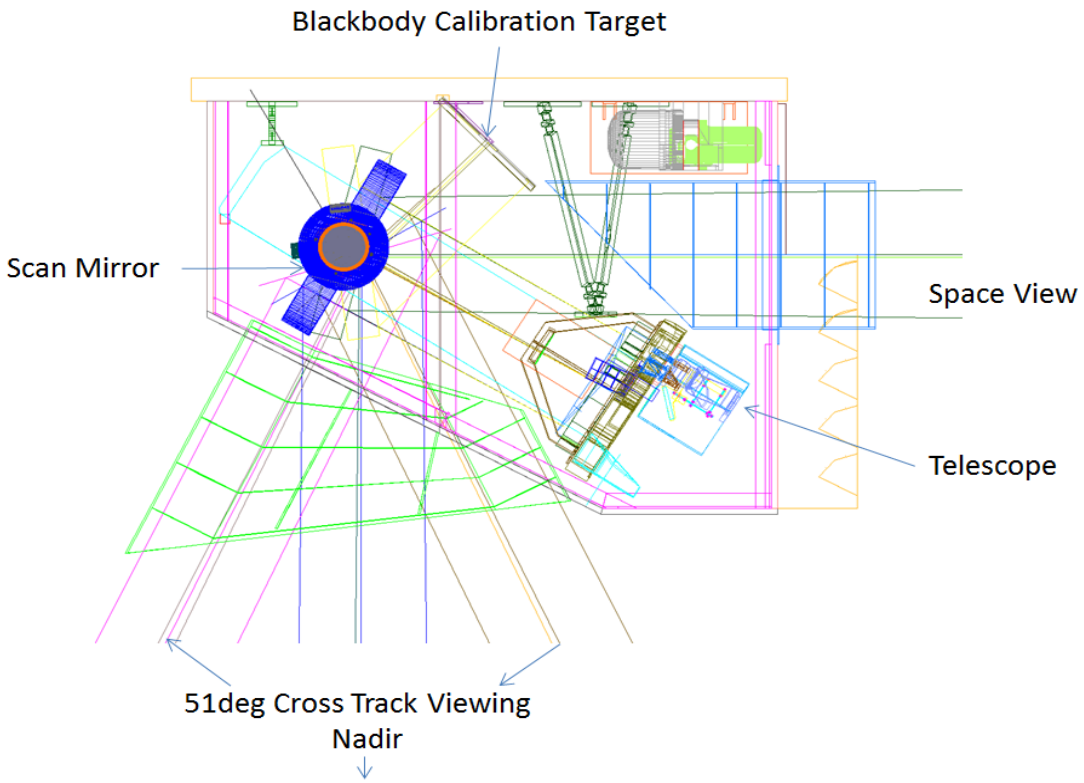

Fig. 1 - Schematic of the Instrument's Sensing Approach

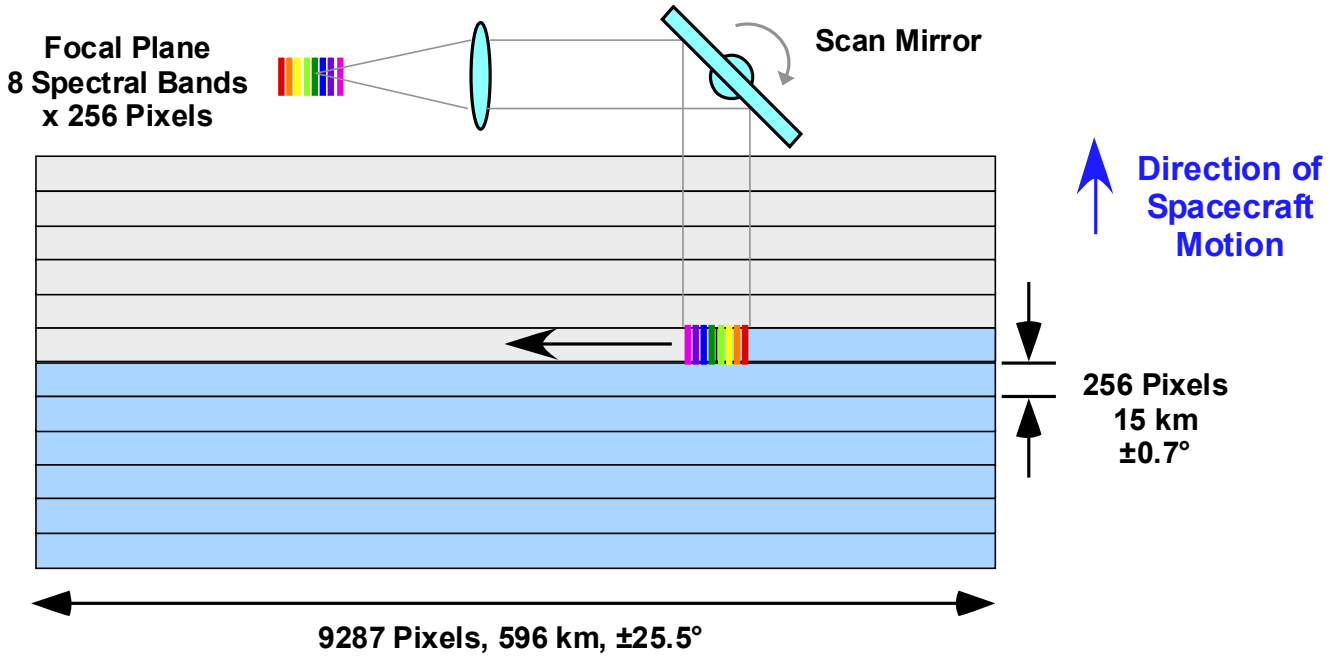

Fig. 2 - The HyspIRI Scan Method

3) HyspIRI would use an internal calibration target, which can be seen in Fig. 1. PHyTIR uses external calibration targets that are not shown in other figures.

4) HyspIRI's control electronics would be housed in an electronics box inside the instrument. For PHyTIR, the control electronics is mounted on a rack outside the instrument, but the engineering model has reserved space for such a box to be placed inside the instrument, allowing the incorporation of flight-like control electronics at a later date.

5) Certain design details, in particular weight relieving efforts to reduce the mass of the instrument, are not fully optimized for PhyTIR.

Overall Instrument Design

The PHyTIR instrument is roughly 1m long, 75cm high and 70cm deep. For HyspIRI, the base panel would also serve as mechanical interface to the spacecraft. An enclosure on a metal frame provides protection as well as optical, thermal, and radiation shielding. The enclosure has two viewing ports, one enables the cross directional scanning during ground observations around nadir, the other enables black space viewing at limb. Both openings have baffles attached that prevent stray light from entering the telescope. Fig. 3 shows the overall PHyTIR instrument that would be suspended at the orbiter's nadir facing instrument deck.

Principal Components

Fig. 4 shows the instrument without the enclosure. Its principal components are the telescope and the scan mirror assemblies; each mounted to the yoke, which is the structural backbone of the telescope assembly. Having the telescope and scanning system incorporated into the same structure enables aligning and testing the whole optical train without the need to suspend it from the base. In the final assembly, bipods will provide the structural link between yoke and base. They feature fine adjustment capabilities in all three rotational directions, so that the telescope assembly can be aligned to the spacecraft and/or to the viewing direction of the other instrument on board. For this, an alignment cube will be used that is attached to the yoke. The cryocoolers are mounted on pedestals to bring them within close proximity of the focal plane, where the cooling is needed.

The eye of the telescope is housed inside a vacuum enclosure. This has the advantage that flight-like testing can be done on an optical table, without having to place the whole instrument inside a vacuum chamber. Optical sensory signal processing takes place at the DICE (digital integrated control electronics) board that is located outside the vacuum chamber.

Scan Mirror Subassembly

A gold coated, double sided mirror, made of Al 6061, is mounted on a rotating shaft. The mirror shaft is suspended from a pair of pre-loaded duplex bearings, enabling backlash-free operation for maximum positional accuracy. Mirror rotation is provided by a brushless DC motor, the rotation rate is 14.15rpm. An optical rotary encoder, having a resolution of 0.3arc-sec, is mounted at the end of the motor shaft. It will primarily be used for motor control. A view of the scan mirror subassembly is presented in Fig. 5.

With a pixel resolution of 60m on the ground, the typical sensor accuracy for ground pointing knowledge should be an order of magnitude better, thus, a sensor resolution of 2arc-sec is needed. The rotary encoder meets that requirement, even though it achieves this resolution by interpolating between individually measured sensory steps. The rotary encoder is primarily used for mirror speed control.

A high resolution interferometric encoder is also built into the scan mirror subassembly. It provides high accuracy mirror position feedback in incremental rates of 0.36marc-sec. It's primarily purpose is as trigger for the focal plane electronics. But either encoder has the capability to serve as back-up encoder for the other.

The functioning of all scan mirror components is well known to the engineering community, with the exception of the interferometric encoder. Hence, a short description of its sensing principle is provided:

This high resolution encoder is grating-based: Light from a source within the sensor head is reflected by a scale that is mounted to the rotating scan mirror. The scale is a glass substrate containing a periodic grating structure. The incident light reflects and diffracts from the grating. The diffracted beam re-enters the sensor head and forms interference fringes on a detector array. The processing electronics calculate the interference fringe pattern's spatial phase from the detector array signals. Scale movements result in fringe pattern movements across the detector array. The processing electronics re-analyzes the resulting fringe pattern and produces a system output corresponding to the scale's new position. All of the analog signal processing is performed in a mixed mode, with application specific integrated circuits (ASIC), while the digital processing occurs in a field programmable gate array (FPGA).

Analog to digital converters provide the interface between the analog signals and the digital signal processing. The signal processing is radiometric, making it insensitive to common mode changes, and the processing algorithms utilized are either not affected by single event upsets or quickly recover from upsets without permanent change.

This sensor uses very minimal operational power, and is extremely lightweight, thus ideal for space applications. Unfortunately, it has only been radiation hardened thus far, but not flight qualified yet.

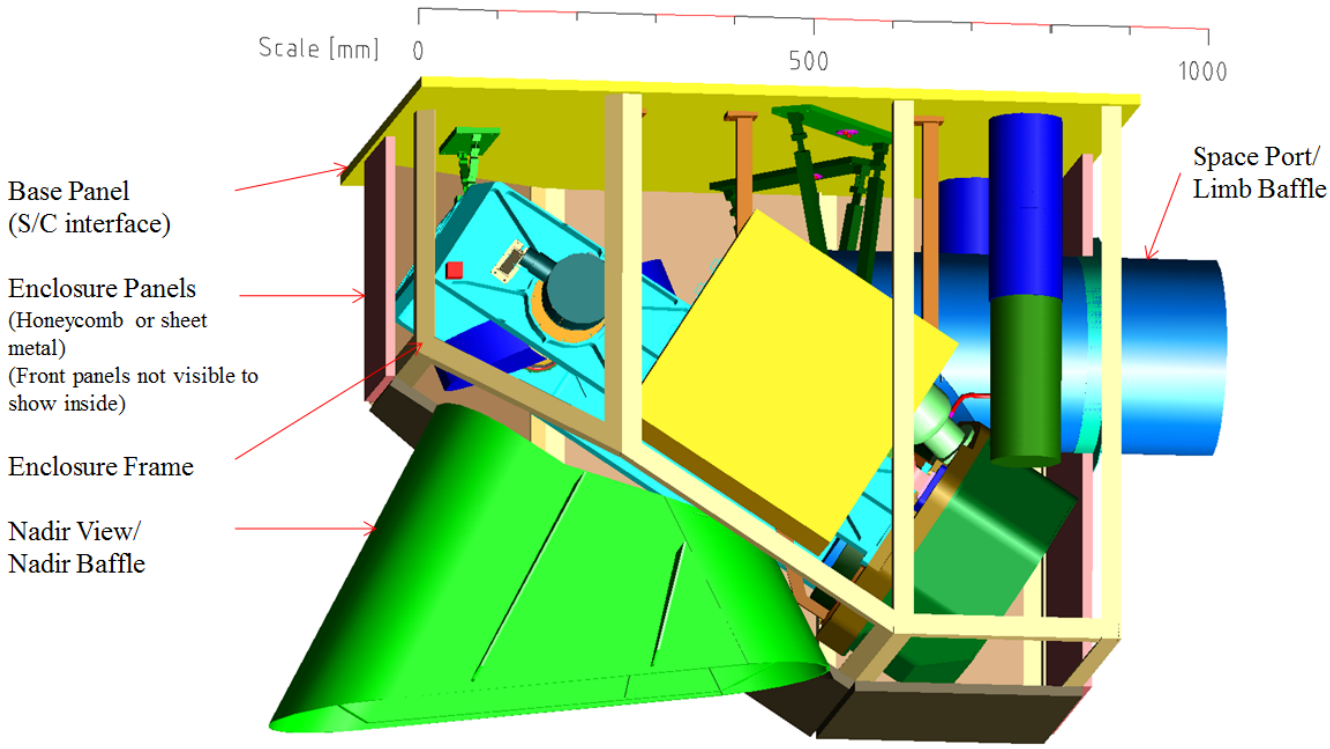

Fig. 3 - The Assembled PhyTIR Instrument

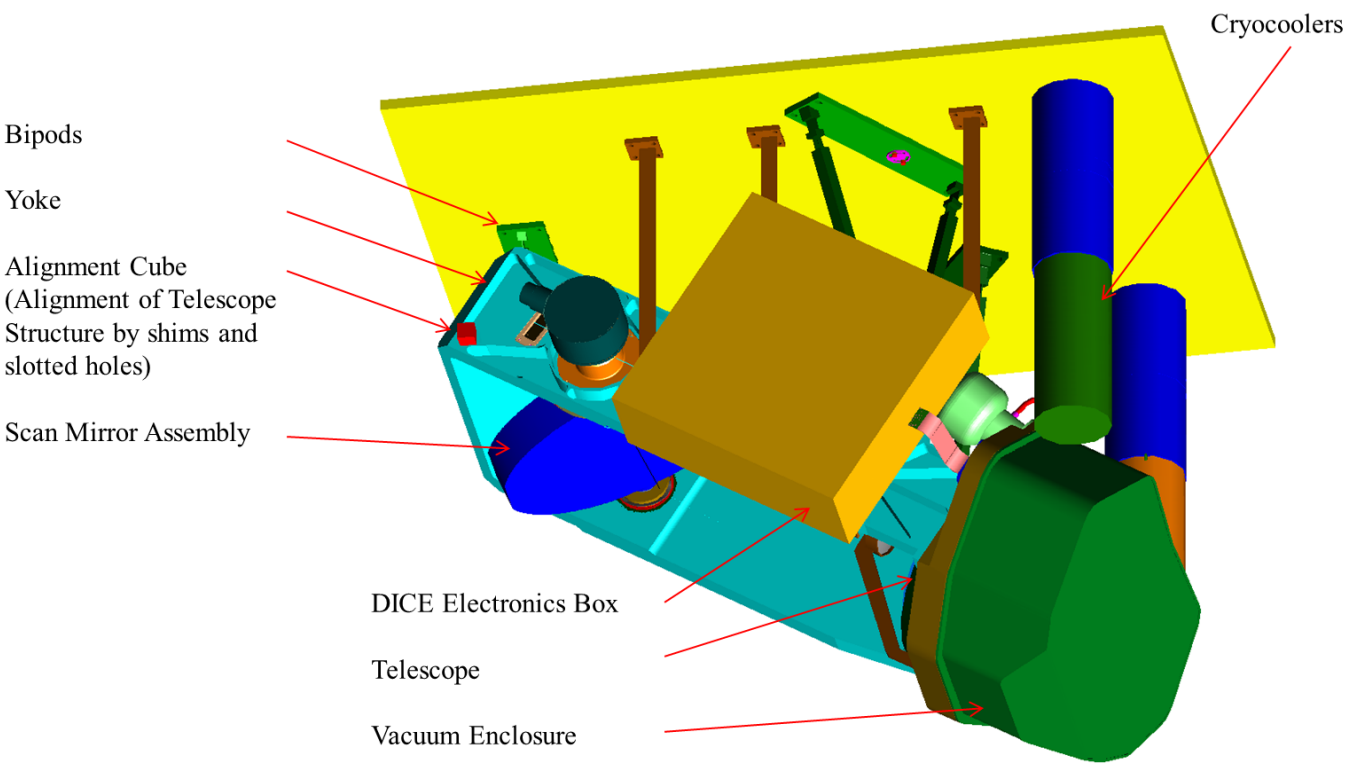

Fig. 4 - The Principal Instrument Components

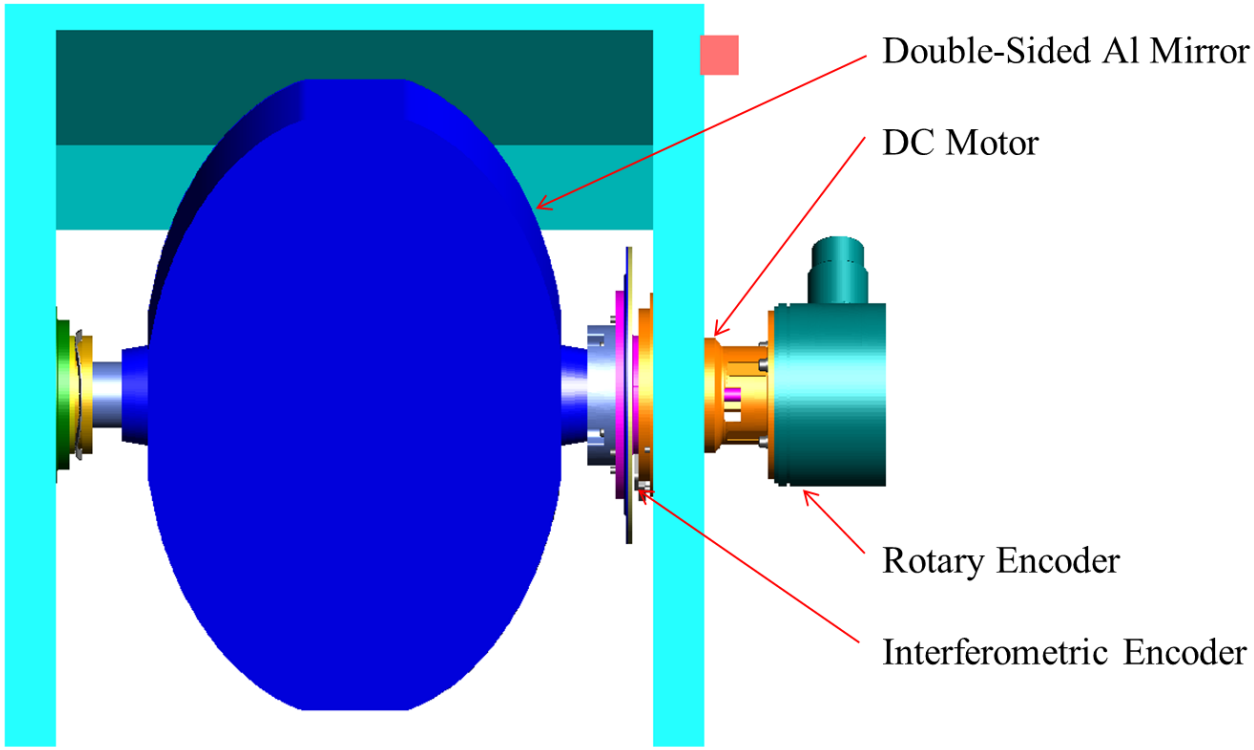

Fig. 5 - Scan Mirror Assembly Cross Section

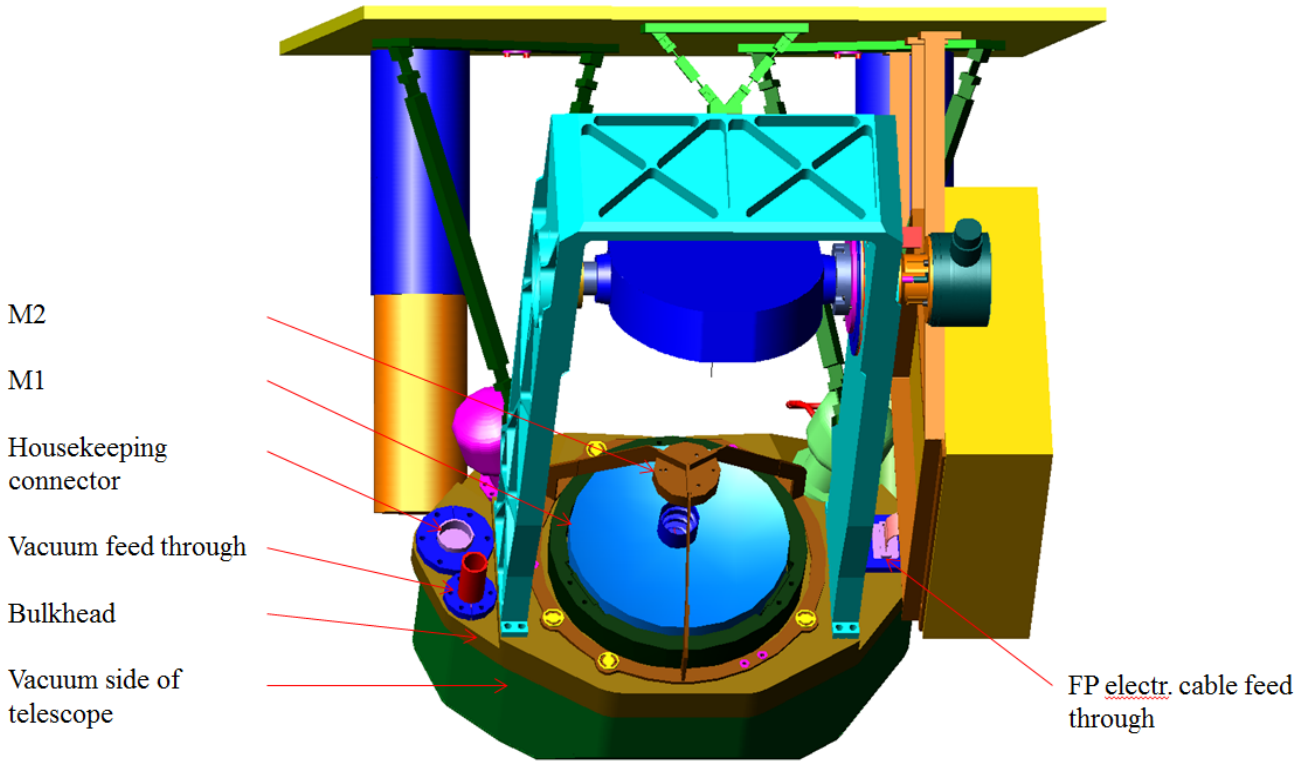

Fig. 6 - The Front of the Telescope

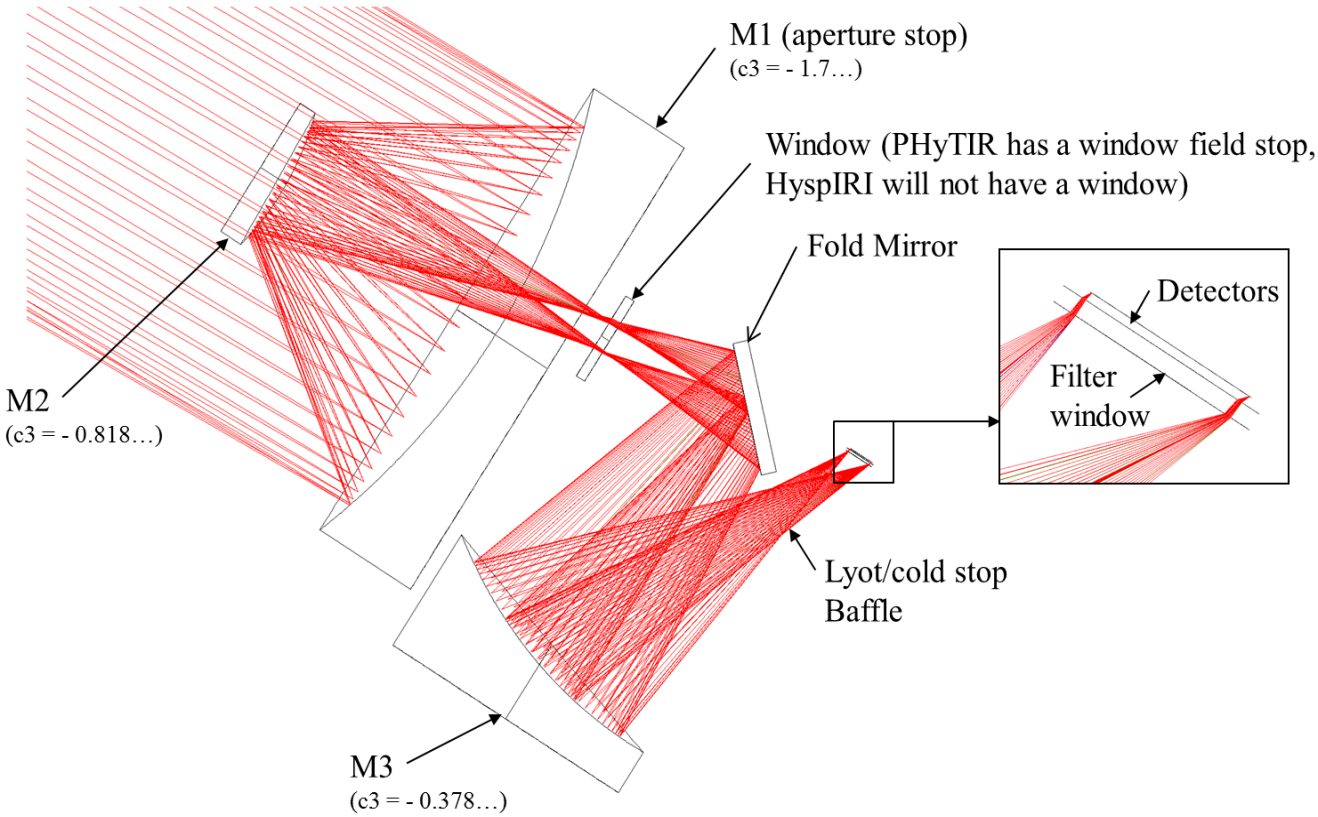

Fig. 7 - The Telescope's Optical Configuration

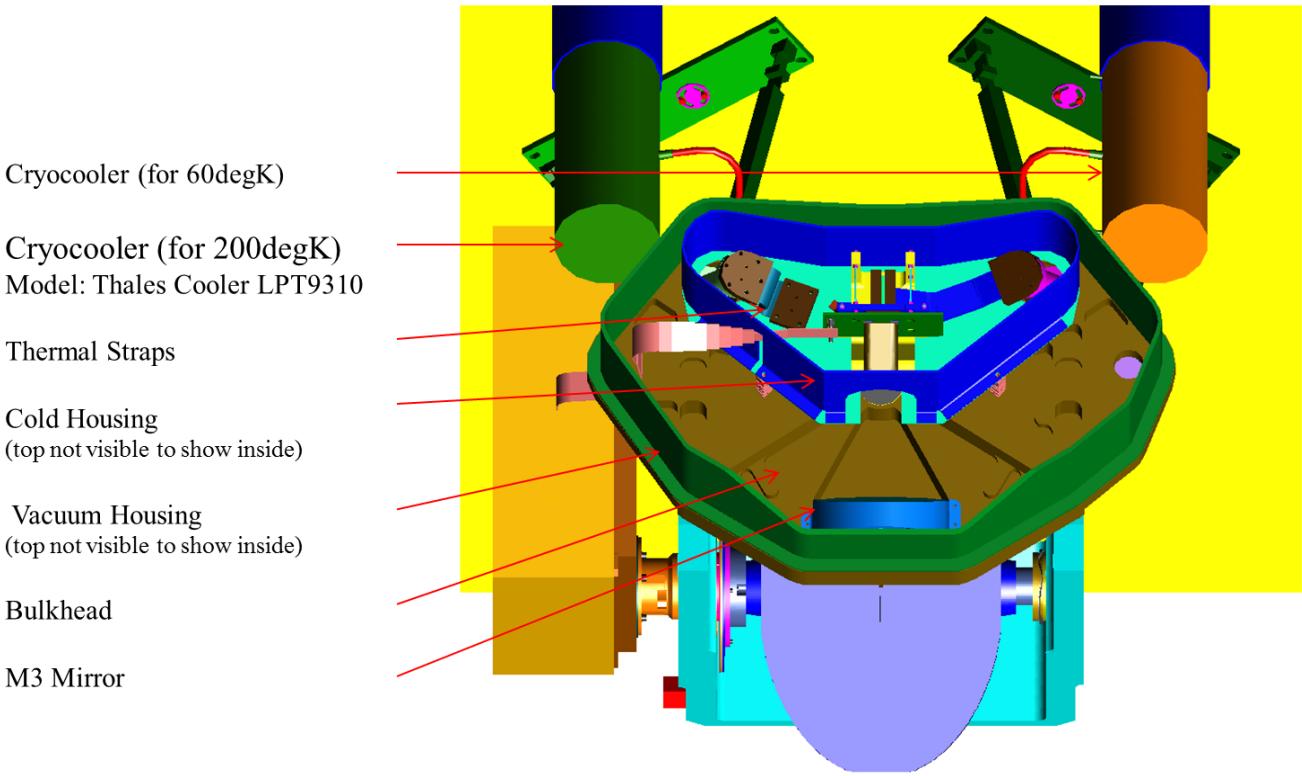

Fig. 8 - The Telescope-backside within the Vacuum Assembly

The Telescope
The front of the telescope consists of the primary and secondary mirrors. Their support structure mounts to the bulkhead, as shown in Fig. 6. The frame for the secondary mirror M2 is fully adjustable in all 6 DoF. The bulkhead also contains the various feed-through devices into vacuum, like the cooler heads, electrical and electronic cables, and a vacuum pump line.

The optical layout is, shown in Fig. 7. It consists of a two-mirror telescope, a vacuum window, a fold mirror, the optical tertiary relay mirror M3, a filter assembly, and directly underneath, the focal plane assembly (FPA). The optics is grouped into two separate modules, which together ensure proper control of thermal radiation and stray light, as well as adequate resolution. The first module is a narrow field 1.5deg two-mirror off-axis Ritchey-Chretien telescope, which is located outside the vacuum chamber. The rays then pass through a baffle in the center of M1, followed by passage through the vacuum window in the bulkhead. The second module is an all reflective relay that is used for control of stray radiation, and also serves to move the focal-plane location further off the direct line of sight of the forward baffles, enabling better thermal control and easier access for mounting components.

The reflective optics hardware is made from Al, the optical surfaces are over-coated with protected gold. The transmissive optics will use ZnSe. Non-optical, baffles and contact surfaces will be coated with appropriate thermal coatings.

Fig. 8 opens the view within the vacuum housing. While the temperature of the bulkhead, vacuum enclosure, tertiary mirror M3, and the area inside the vacuum chamber is ambient, a cold shield directly around, and in front of the focal plane, minimizes stray radiation from the warm environment. This cold shield is cooled to 200K by the cryocooler on the left, which is linked to the cold shield via a thermal strap. The cryocooler on the right has its own thermal strap that links it directly to the otherwise conductively isolated focal plane assembly (FPA) structure. This FP structure is kept at a constant 60K.

The FPA consists of the detectors, read out integrated circuits (ROIC), an electronics board, the set of filters in front of the FP, and various structural elements. The kinematic mounts serve to isolate the opto-mechanical system from unwanted vibrations, and also provide thermal isolation. The FP structure also supports the fold mirror. An externally polished, cone-like cold baffling structure is conductively attached to the FP. This baffle serves as cold shield since it is located at an intermediate stop position. It minimizes stray light from background sources.

The Spectral Filters
PHyTIR uses three representative filters (see Fig. 9 & 10) providing a 4µm, an 8.28µm and a 12µm channel. These 3 channels allow full performance testing over the full spectral range of the proposed flight detector. Each filter will be in close proximity over one third of the focal plane, and mounted in a frame that provides good thermal contact to the FP. The HyspIRI focal plane would have eight spectral filters that would be aligned over the 8 rows of the detector array.

The Detectors
All 8 spectral channels will use cooled band-gap Mercury Cadmium Telluride (MCT) detector arrays. Spectral separation is achieved using 3 filters (PHyTIR) or 8 filters (HyspIRI) that are placed in close proximity over the detector array (see Fig 10). Under each filter are multiple columns of 256 pixels that are aligned perpendicularly to the cross-track sweep direction. The ROIC reads the sensor array every 32µsec at a rate of 13Mpixels/sec, with data sent over 32 analog output lines. This results into a pixel resolution of 60m at the nominal altitude of 623km, and a mirror scanning rate of 14.15rpm.

Prototype Electronics, PhyTIR Instrument Block Diagram
The instrument's control scheme is depicted in Fig. 11. The prototype electronics will provide digital control of the focal plane, digitization of focal plane signals, scan motor control, scan mirror encoder evaluations and scan mirror synchronization, and time stamping of focal-plane and encoder signals. Output signals will be read by a computer for subsequent processing.

Implementation
The instrument is currently being built; it should be on line by April of 2013. Unfortunately, this is too late to present results in this paper. A variety of calibration targets are being readied to enable the verification of the instrument, and in particular, its key technology items. To simulate space-like conditions, the sensor area will be cooled and will operate in vacuum. The instrument was also designed so that it can be deployed on an aircraft for field measurements.

7. SUMMARY

The PhyTIR instrument is being developed to demonstrate and meet advanced capabilities in the areas of detector technology, in particular regarding extremely high data rates, to demonstrate the necessary high pointing accuracy and associated stability, to prove the adequacy of the sensor elements, and to verify the newly developed cold shielding, enabling the use of ambient temperature optics. PHyTIR is the precursor for the proposed HyspIRI flight instrument that would be capable of advancing the state of the art of earth science, in particular for environmental and ground measurements.

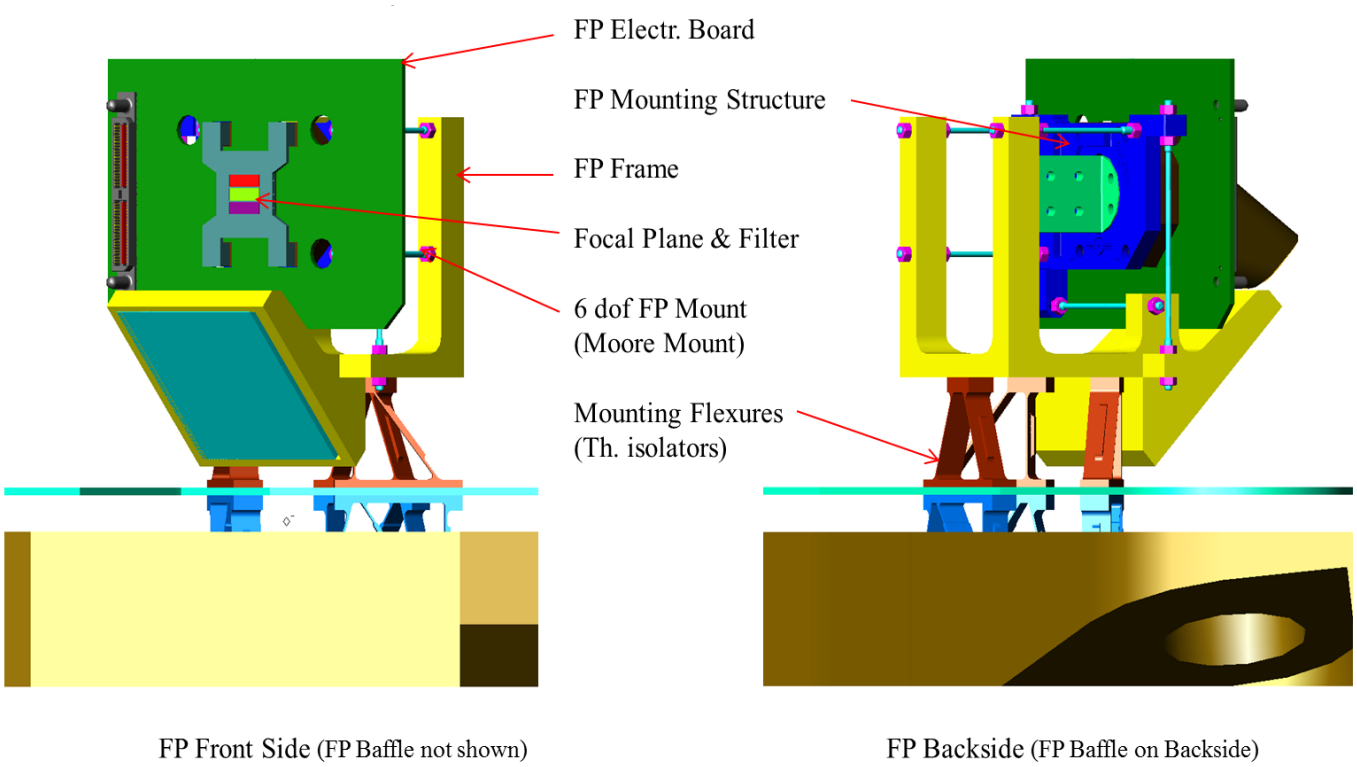

Fig. 9 - The Focal Plane Assembly

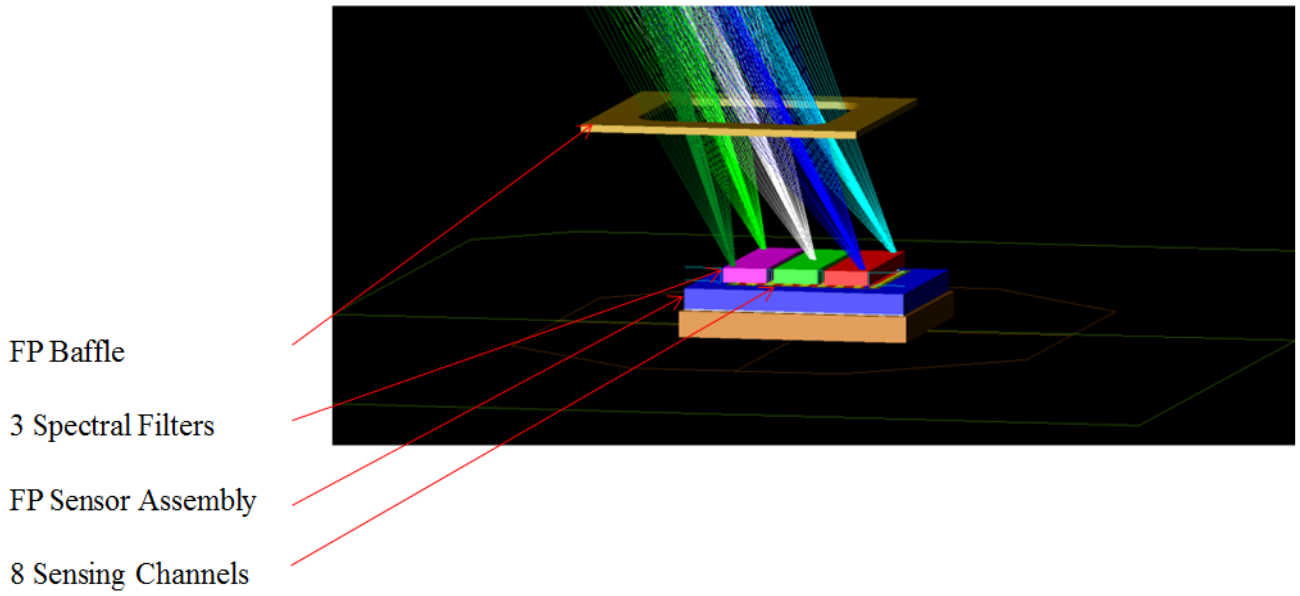

Fig. 10 - The Detector Assembly with the 8 Focal Plane Detector Columns

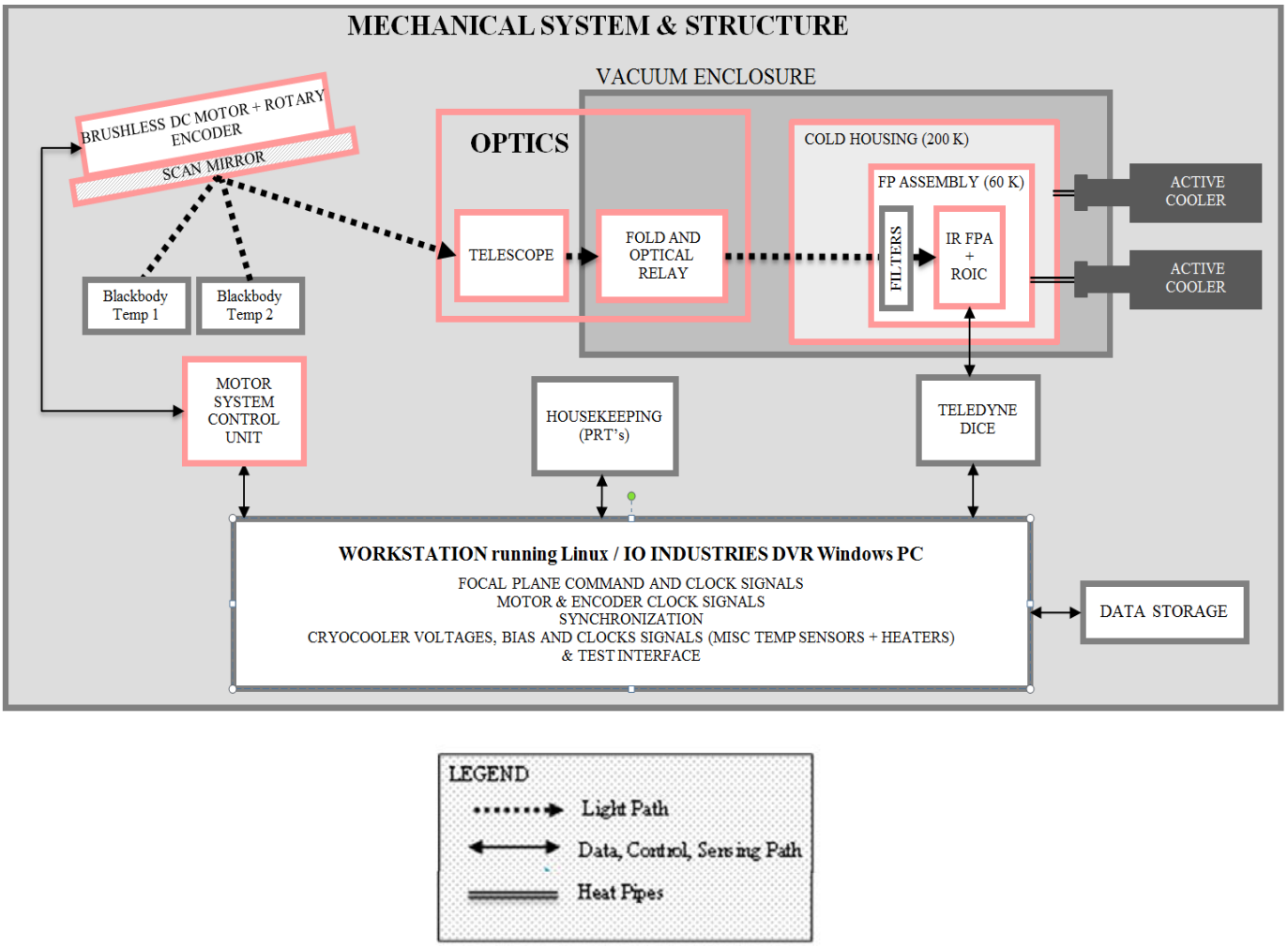

Fig. 11 - The PHyTIR Instrument Block Diagram

BIOGRAPHY

Dr. Bruno Jau *is a Member of the Technical Staff at the Jet Propulsion Laboratory. He earned a Ph.D. in ME from the University of Southern California and a MS degree in ME from Michigan State University. His undergraduate work was done in Switzerland.*

His areas of expertise are solid mechanics, mechanisms, CAD and manufacturing. He gained professional experiences in corporate, R&D, consulting and University environments, including a position as a Professor at Texas A&M University. Principal research activities include the development, design, and implementation of electromechanical systems and space instruments. He has published over 35 articles in these areas.

Dr. Jau joined JPL in 1985 and has worked in Robotics and Mechanical Engineering Sections since then. He was responsible for the mechanical development of several space flight instruments. He also developed, designed and implemented a variety of robotic prototypes.

ACKNOWLEDGEMENT

The research described in this paper was carried out at the Jet Propulsion Laboratory, California Institute of Technology, under a contract with the National Aeronautics and Space Administration.