AAS 13-458

DESIGN AND DEVELOPMENT OF THE MSL DESCENT STAGE PROPULSION SYSTEM

Jeffrey M. Weiss,[*] Carl S. Guernsey,[†]

On August 5, 2012, The Mars Science Laboratory mission successfully landed the largest interplanetary rover ever built, Curiosity, on the surface of Mars. The Entry, Descent, and Landing (EDL) phase of this mission was by far the most complex landing ever attempted on a planetary body. The Descent Stage Propulsion System played an integral and critical role during Curiosity's EDL. The Descent Stage Propulsion System was a one of a kind hydrazine propulsion system designed specifically for the EDL phase of the MSL mission. It was designed, built, and tested at the Jet Propulsion Laboratory (JPL). The purpose of this paper is to present an overview of the design and development of the MSL Descent Stage Propulsion System. Driving requirements, system design, component selection, operational sequence of the system at Mars, new developments, and key challenges will be discussed.

INTRODUCTION

The design and development of the Descent Stage Propulsion System for Mars Science Laboratory (MSL) broke new ground at JPL in multiple areas. Previous Mars landers built at JPL (e.g., Mars Pathfinder (MPF) and Mars Exploration Lander (MER)) did not require a liquid propulsion system for powered descent, but rather relied on small solid rockets to arrest the vertical velocity approximately 5 to 10 meters above the surface and then used air bags to cushion the landing. The Phoenix lander did use a liquid propulsion system for final descent. However, because of the lower mass of that lander, a much smaller propulsion system using thruster pulse-width modulation was feasible rather than one using high-thrust throttled engines. In order to accommodate the heavy payload that MSL was carrying to the Martian surface, JPL had to abandon the airbag approach used on MPF and MER and the lander approach used on Phoenix and go to what is now called the Sky-Crane approach, where the rover was lowered to the surface via a cable from the Descent Stage. The liquid hydrazine propulsion system onboard the Descent Stage provided the very high thrust necessary to decelerate the vehicle and hover over the Martian surface while the rover was lowered to the ground.

[*] Principal Engineer, Propulsion, Thermal, and Materials Engineering Section, Jet Propulsion Laboratory, California Institute of Technology, 4800 Oak Grove Dr., Pasadena, CA, 91109 USA
[†] Principal Engineer, Propulsion, Thermal, and Materials Engineering Section, Jet Propulsion Laboratory, California Institute of Technology, 4800 Oak Grove Dr., Pasadena, CA, 91109 USA

DRIVING REQUIREMENTS

At the highest level, the key driving requirements of the Descent Stage Propulsion System were to (1) provide attitude control after cruise stage separation and during entry into the Martian atmosphere and (2) provide deceleration and attitude control during powered descent. Attitude control after cruise stage separation and during atmospheric entry was accomplished using eight 250-N Reaction Control System (RCS) thrusters whose nozzles penetrated through the back shell of the flight vehicle. Deceleration and attitude control during powered descent were accomplished using eight independently throttled Mars Lander Engines (MLEs), each with a usable thrust range of approximately 400 to 3300 N.

DESCRIPTION OF THE SYSTEM

The Descent Stage Propulsion System is a pressure regulated monopropellant hydrazine system. Figure 1 provides a block diagram of the system. Two high-pressure composite overwrapped pressurant tanks provide the helium pressurant source that pressurizes the hydrazine. A single High Flow Pressure Regulator (HFPR) reduces and regulates the helium pressure to the propellant tanks. The nominal beginning of life (BOL) pressure in the helium tanks is 28,300 kPa (4,100 psia). The nominal output pressure of the regular is 4,895±140 kPa (710±20 psia) regulated and 5,100 kPa (740 psia) at lock up. Downstream of the HFPR are three titanium propellant tanks. Elastomeric (AFE-332) diaphragms are used to separate the hydrazine from the helium pressurant, provide bubble free positive expulsion of propellant from the tanks, and minimize propellant sloshing during lateral maneuvers. For MSL, each tank carried approximately 133 kg of high purity hydrazine. The maximum capability of each tank is 133.5 kg.

Downstream of the propellant tanks a network of tubing leads to two separate sets of engines. The Reaction Control System (RCS) consists of a set of eight 250-N hydrazine thrusters. As discussed above, these thrusters are only used for attitude control immediately following separation from the Cruise Stage prior to atmospheric entry, and then for guided entry during atmospheric flight. The MLEs are used for powered descent and flyaway. Each MLE is independently throttled using a motor controlled cavitating throttle valve. The engines have a usable thrust range of approximately 400 to 3300 N. The RCS thrusters are not used during final descent. The MLEs are capable or providing 3-axis attitude control. The MLEs are slightly canted to allow for roll control.

Pyrotechnic valves that are in the normally closed state are used throughout the system to isolate pressurant and propellant prior to operation of the system at Mars. Normally closed pyro valves have parent metal seals that provide positive isolation and negate any risk of leakage during payload processing at the launch site, as well as during the long journey to Mars.

Discussion on Redundancy

For planetary missions, JPL typically designs and implements partially or fully redundant propulsion systems. However, landing on Mars presents specific challenges that limit the level of redundancy that can be built into the propulsion system. Specifically, the precise timing of events during the EDL phase does not allow adequate time to detect failures and isolate or swap systems. Hence, both the MLEs and RCS thrusters are single string, as well as the High Flow Pressure Regulator. The spacecraft was not designed to survive an engine failure for either the MLEs or RCS thrusters. Nor could it accommodate a failed closed pressure regulator or a wide-open regulator failure. However, those failure modes are exceedingly unlikely. The regulator remains isolated until just prior to first use, and once it is brought on line, its duration of operation is relatively short, it is likely that a leakage failure of the regulator would have been readily survivable.

The pyro valves used to isolate propellant and pressurant are all parallel redundant. This protects the system in the event that a pyro valve fails to actuate open when commanded. Although such a scenario is unlikely, it has been observed in past testing[1]. On the other hand, series redundancy of the pyro valves was deemed unnecessary. The parent metal seal of the device, combined with very large structural margins and extensive testing, make leakage of a pyro valve non-credible.

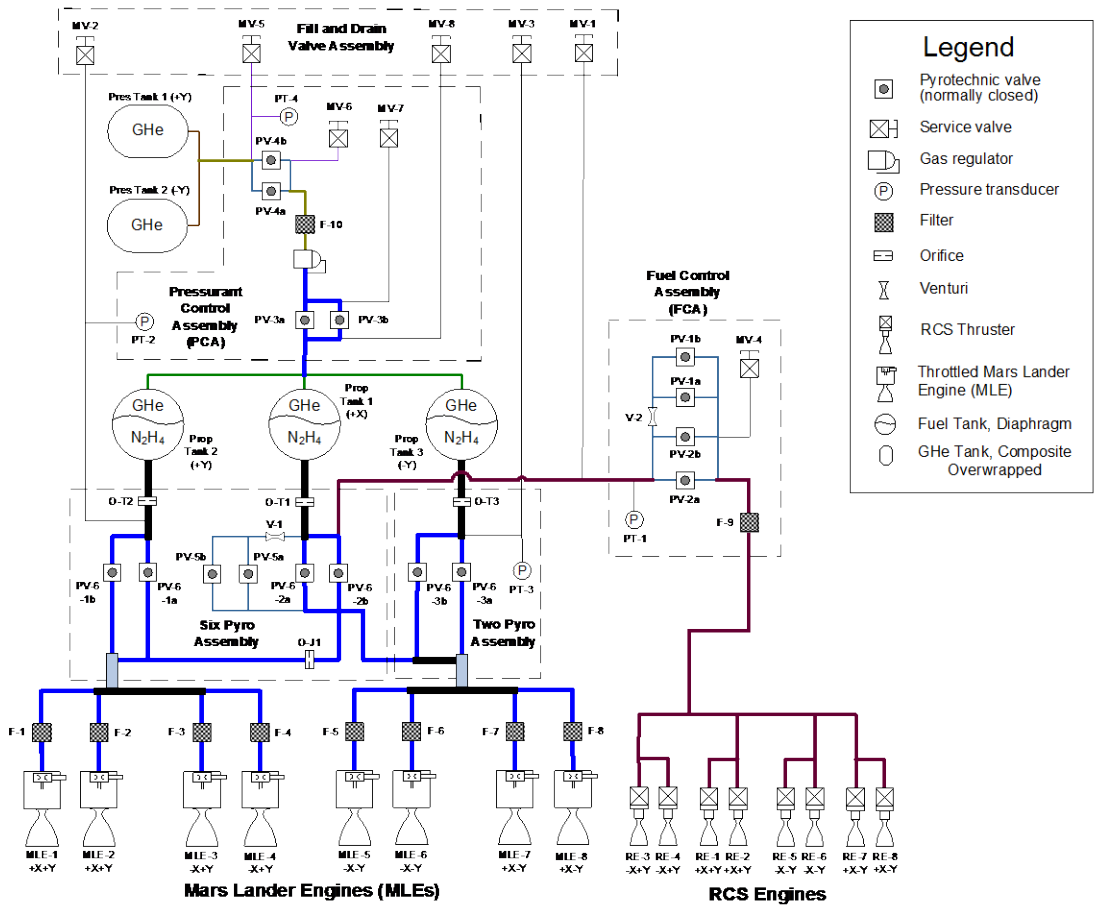

Figure 1. Block Diagram of the MSL Descent Stage Propulsion System

COMPONENT SELECTION AND ENABLING TECHNOLOGIES

The most significant driver for component selection for the Descent Stage Propulsion System was the thrust requirement for powered descent. With a maximum thrust capability of approximately 26,000-N (5,900-lbf) the system is much larger than typical for a planetary spacecraft or earth orbiter. (Typical satellites carry a propulsion system that has a single main engine providing approximately 400 to 450-N of thrust and a small RCS providing attitude control.) The propellant and pressurant flow rates required to maintain thrust during powered descent required larger components with small pressure drops. Where typical propulsion systems for in-space applications utilize propellant tubing that is ¼ inch to 3/8 inch in diameter, the Descent Stage Propulsion System required tubing diameters as large as 1.25 inch, in order to minimize pressure drop through the system.

Several propulsion components had to be developed and qualified for MSL in order to enable the mission. They included a High Flow Pressure Regulator, lightweight, high flow Radial Arm Filters, a ¾ inch diameter normally closed Pyrotechnic Valve, the Throttle Valve Assemblies for the MLEs, and the MLE thrust chambers. In order to develop and qualify these components (and other technologies needed for the MSL mission) to meet the MSL launch schedule, a Mars Focused Technology Program was put in place to provide early funding to specific component developments in order to reduce development risk early in the Project's lifecycle.

Mars Lander Engine

The Mars Lander Engine was one of the key enabling developments for the MSL Project. The basis for the MLE design is the original Viking Lander Engine, designed and built by Rocket Research Corporation (now part of Aerojet) in the 1970s. However, significant modifications to the design have been made for MSL. Those changes include use of new higher strength materials, a new more robust catalyst bed retention system, replacement of the original Shell 405 catalyst with Aerojet's new S405 Catalyst, replacement of the 18 nozzle thrust chamber with a single nozzle thrust chamber, addition of a catalyst bed heater, and modifications to its heat shield. The Viking project developed the multi-nozzle thrust chamber configuration in order to minimize plume interactions with the Marian soil. MSL's sky-crane implementation reduced that concern and allowed the project to change to a higher performing single nozzle thrust chamber. A comparison of the original Viking Lander Engine design Rocket Research MR-80) and the MSL MLE design Aerojet MR-80B) is shown in Figure 2.

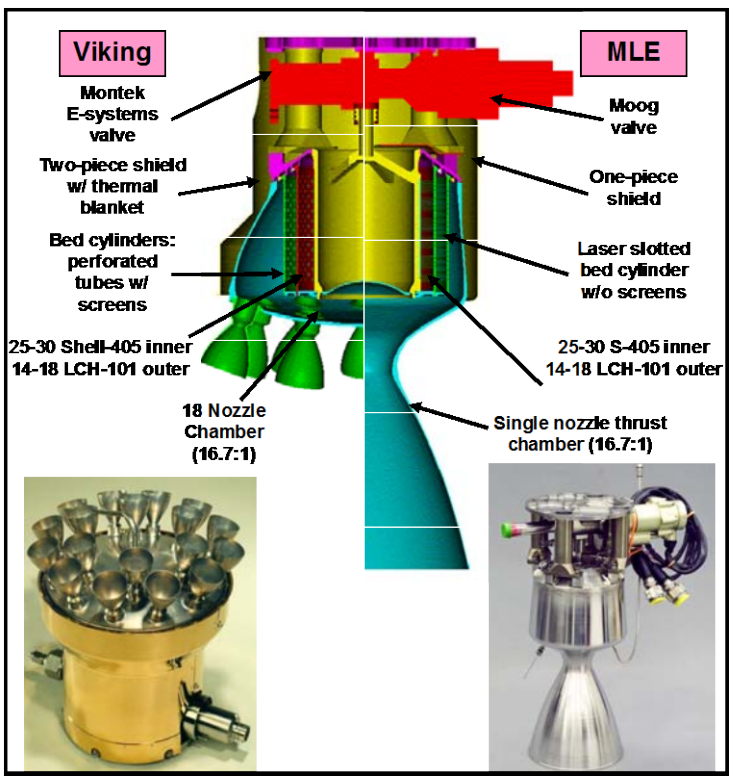

Figure 2. Comparison of the Viking and MLE Designs[2]

A comprehensive development and qualification program was undertaken, starting in 2001, to assure that the MLE was ready for flight. Seven separate development engines were tested over a

five-year period, culminating in a qualification test in 2006. References 2 and 3 provide additional information on the development and testing of the MLE.

Throttle Valve Assembly

The throttle valve assembly used with the Viking engine was manufactured by a company that is no longer in business. Although the drawings and manufacturing information still exist, the Project decided to go with a new design for multiple reasons; most notably the ability of a cavitating design to make engine flow rate independent of catalyst bed pressure drop, allowing for precise throttle control. The MSL Throttle Valve was designed and manufactured by Moog, Inc. The propellant flow is controlled via a cavitating venturi valve. Linear motion of a pintle controls the flow area and therefore flow rate. Flow rate can vary between 0.015 kg/s and 1.5 kg/s at a feed pressure of approximately 4,100-4,800 kPa (600-700 psia). A brushless DC motor provides actuation of the pintle. Figure 3 shows a photograph of the flight configuration. The cavitating venturi design prevents pressure disturbances downstream of the valve from propagating back into the feed system. This is an important design feature as the team was concerned about feed system interactions during operation of the MLEs that could cause stability issues. Reference 4 provides additional information on the design and development of the MSL Throttle Valve Assembly.

Figure 3. Moog Throttle Valve Assembly for MSL

Radial Arm Filter

Filtration of the propellant and pressurant is required throughout the Descent Stage Propulsion System to prevent particulate contamination from causing thruster valve leakage and regulator leakage, as well damage to catalyst beds. Traditionally, JPL has used etched disk filters made by Vacco Industries in their propulsion systems for system filtration. Etched disk filters contain hundreds of individual circular discs assembled onto a perforated mandrel. The stacked discs are preloaded, which compresses each disc flat against the next disc, which in turn forces the propellant or pressurant to flow through channels etched into the discs. The size of the channels determines the filtration. This design has worked well in the past for conventional in-space propulsion systems. However, in order to accommodate the very high flow rates seen in the Descent Stage Propulsion System without an excessive pressure drop across the filter, a conventional etched disc filter would need to be very large, with a corresponding increase in mass. Hence, the Focused Technology Program under took a program to develop a lightweight, high flow filter. Funded by JPL, Vacco developed and qualified what became the radial arm filter. The design allows fluid to

flow radially across multiple filtering arms. This design increases the total filtering area for a filter as compared to a similarly sized filter using the conventional round etched disc configuration. The filtering area per disc is approximately 33% greater than the traditional round disc with the equivalent flow passage configuration. Rather than being preloaded around a central support, the discs in the radial arm filter are diffusion bonded, resulting in significant mass savings. The filter body and end caps are manufactured from titanium in order to reduce overall filter weight. Figure 4 shows a photograph of the Radial Arm Filter.

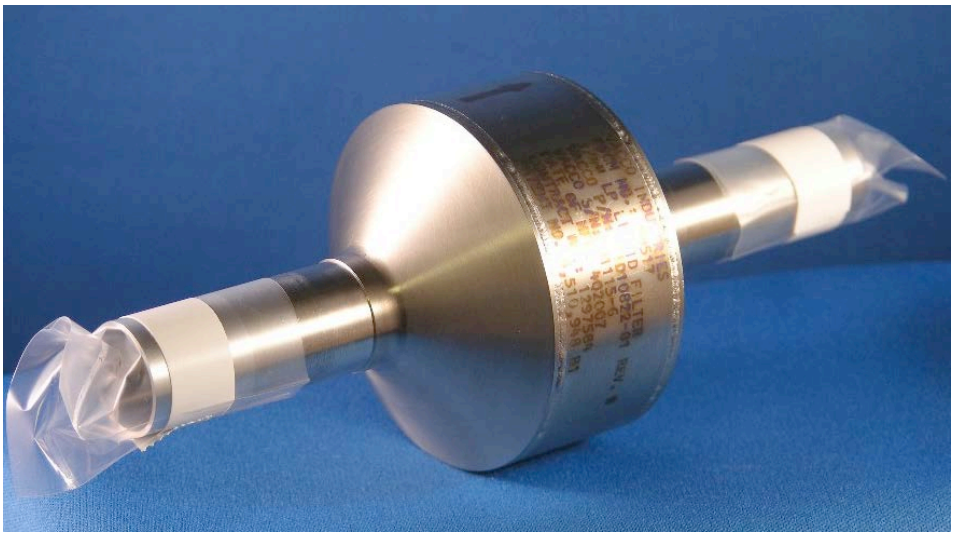

Figure 4. Vacco Radial Arm Filter for MSL

High Flow Pressure Regulator

The operation of MSL Descent Stage Propulsion System puts extreme demands on its pressure regulator. A tight pressure regulation band must be maintained to assure predictable and controlled engine performance. The flow rate demand varies from a low of a single RCS thruster firing to a high of all eight MLEs operating at full throttle. The helium supply gas becomes extremely cold as its pressure blows down during powered descent. The minimum allowable inlet pressure for regulated operation must be as low as possible to make maximum use of the available helium supply. The unit must be designed to handle the slam start that occurs when flow is initiated by opening the upstream pyro valves. Finally, the units must be extremely reliable in this environment since it is a single string component. Failure to operate correctly would likely result in failure of the mission[5].

JPL initially began working towards developing a new regulator with an industrial partner that would meet the stringent requirements of the MSL mission. That effort was eventually terminated due to perceived risk of the new design. With little remaining schedule margin, an extensive survey of the spacecraft regulator market was undertaken in hopes of finding an existing design that could meet our needs. A pilot actuated, single stage regulator used in the Space Shuttle Orbiter main propulsion system was found to meet nearly all of the MSL performance requirements.

As is becoming common in the aerospace industry, the original manufacturer of the shuttle regulator no longer existed. Vacco Industries had purchased the design for the regulator. Fortunately, several of the engineers and technicians that were originally involved in the development

and production of the Shuttle regulator now worked for Vacco. In addition, NASA's Shuttle Program had multiple spare regulators and piece parts that they were willing to provide to JPL.

Although the Shuttle regulator was a good match for MSL, some modifications had to be made and additional testing had to be performed in order to qualify the hardware for use on MSL. Reference 5 provides more information on the modifications made to the regulator, as well as the extensive testing performed to verify it would meet MSL's challenging performance requirements. Figure 5 provides a photo of an MSL flight regulator.

Figure 5. Vacco High Flow Pressure Regulator for MSL

¾ inch NC Pyrotechnic Valve

As was discussed above, the very high propellant flow rates in the Descent Stage Propulsion System required components with minimal pressure drop. At the start of the MSL project, the largest normally closed pyro valve on the market was a ½ inch diameter valve. Use of this valve on MSL would result in unacceptably high-pressure drop in the propellant lines leading to the MLEs. Hence the MSL project contracted with Conax Florida Corp to develop and qualify a new ¾ inch diameter normally closed pyro valve. The design was based on the heritage of two separate older designs used on smaller pyro valves. The pyrotechnic section of the valve made use of the typical Conax press-fit 'zero' blow-by design commonly used on Conax pyro valves. The fluid section of the valve utilized a separate ram and piston design that resulted in an unobstructed flow path once the pyro valve was fired open. This design concept originated with the UPCO Company, who sold their pyro valve product line to Conax.

Concurrent with the procurement of the MSL pyro valves, test anomalies were observed on other programs where the booster charge in the pyro valve Primer Chamber Assembly (PCA) failed to ignite, resulting in a failure of the pyro valve to actuate. These failures led to a fairly extensive investigation. As a result of the test failures, MSL pursued a new design for the PCA using stainless steel rather than aluminum. Reference 1 discusses some of the findings of the investigation. References 6 and 7 provide information on the design of the MSL stainless steel PCA, as well as a description of the testing performed to qualify the design.

OPERATION OF THE SYSTEM

The Descent Stage Propulsion System remains completely isolated and inactive during launch and the eight-month cruise to Mars. Only diagnostic and health information operations are performed on the Descent Stage Propulsion System during cruise (e.g., TVA pintle position cycling, RCS thruster heater testing). During that time the Cruise Stage Propulsion System, also designed and built at JPL, provides for attitude control and small trajectory correction maneuvers. It is not until shortly before entry into the Martian atmosphere that the full capability of the Descent Stage Propulsion System is enabled.

Operation of the RCS

In preparation for use of the Descent Stage Propulsion System, the catalyst bed heaters on the MLEs and RCS thrusters are turned on in order to warm up the catalyst beds prior to first use. Just prior to separation from the Cruise Stage, the pyro valves isolating the RCS system are opened. First the valves PV-1a and PV-1b are fired. (See Figure 1.) This allows hydrazine to slowly fill the lines down to the RCS thrusters. The venturi V-2 restricts propellant flow and prevents a 'water hammer' event that could damage lines or thruster valves. Once the lines are filled, the pyro valves PV-2a and PV-2b are fired to bypass the venturi and enable full propellant flow to the RCS thrusters. Following Cruise Stage separation, a warm up sequence of pulses is performed on all eight RCS thrusters to raise their catalyst bed temperatures further. The RCS system then performs an autonomous de-tumble, a de-spin maneuver, and then turns the spacecraft to the Entry attitude. Note that during these thruster operations, the system is operating in a blow-down mode, since the regulator has not yet been brought on line. This is done to minimize the duration that the regulator is on line, in order to mitigate the consequence of a helium leak across the seat of the regulator. Also note that only Propellant Tank 1 feeds propellant to the RCS (Reference Figure 1). This is done to prevent the unpredictable transfer of propellant between tanks that could otherwise occur if the tank gas and liquid sides were all interconnected during this period of zero gravity.

At Entry, the High Flow Pressure Regulator is brought on line. This is done by first firing Pyro valves PV-3a and PV-3b open (immediately downstream of the HFPR) and then PV-4a and PV-b open (immediately upstream of the HFPR). This allows helium to flow through the pressure regulator, fully pressurizing all three propellant tanks to a lock up pressure of approximately 5,000 kPa (730 psia). Note that bringing the regulator on line in this manner results in a "slam start" of the regulator. Although the pyro valves downstream of the regulator are opened first, which opens up additional ullage to the regulator, there is still limited volume downstream of the regulator since the propellant tanks are still full.

The RCS in now pressure-regulated to perform higher-thrust hypersonic aero-maneuvering during the entry phase of EDL (i.e., it will produce full thrust for entry maneuverability). In the guided entry phase, the RCS performs multiple bank reversal maneuvers, by rotating (i.e., banking) the vehicle in order to point the lift vector, which in turn allows the spacecraft to control its trajectory. Next the RCS executes what is called the SUFR maneuver (Straighten Up and Fly Right), which controls the vehicle attitude while balance masses are ejected to move the vehicle center-of-mass to the vehicle centerline (i.e., conventional ballistic mode). The RCS is then used to help stabilize the vehicle attitude such that the line of action of the parachute is along the velocity vector (i.e., the vehicle is oriented such that the parachute is deployed at zero angle of attack). The RCS is inhibited (by software) during parachute deploy. After parachute deployment, the RCS is re-enabled to allow it to dampen what is called the wrist mode[8]. The thrusters are used to null any excessive disturbance rates on the vehicle or make any attitude corrections (i.e., limit any large vehicle rock motion while it is still on the parachute). The RCS is then disabled

for powered descent at separation of the Powered Descent Vehicle (i.e., the Descent Stage and attached Rover) from the back shell.

Operation of the MLEs

After the heat shield is released and while the vehicle is still attached to the Back Shell and on the parachute, the Descent Stage radar is used to determine the distance to the surface and the vehicle's velocity. The vehicle uses this information to compute a solution space for touch down. During this period the MLE throttle valves are powered on. Finally, the MLE system is primed by firing pyro valves PV-5a and PV-5b. This allows hydrazine to bleed down and fill the propellant lines leading to the MLEs. As with the RCS system, a venturi (V-1) is used to restrict flow and prevent water hammer. The sizing of the venturi V-1 was constrained by the requirement that it take no more than 8 seconds to prime the lines to the MLEs.

The back shell of the vehicle (and parachute along with it) is then released. The Powered Descent Vehicle (PDV) is now free flying. Figure 6 provides a cartoon of the PDV separation from the back shell. The vehicle attitude is approximately 1,500-2,000 m above the planet surface and the velocity is approximately 100 m/s. Pyro valves PV-6-1a, PV-6-1b, PV-6-2a, PV-6-2b, PV-6-3a, and PV-6-3b are immediately actuated open, which brings the MLEs on line with full pressure. The vehicle free falls for approximately 1 second. Then all eight MLEs are throttled up to 20% of full thrust for 200 ms. This is done to warm up the MLE catalyst beds. The vehicle then executes a de-tumble maneuver to stabilize itself in a pre-determined attitude. Next the vehicle enters Powered Descent. First a divert maneuver is executed to avoid re-contact with the back shell and parachute. Then, in a maneuver referred to as powered approach, a turn is performed to allow horizontal velocity to be reduced to near zero while the vertical velocity is reduced to about 20 m/s, at an altitude of approximately 100 m above the surface.

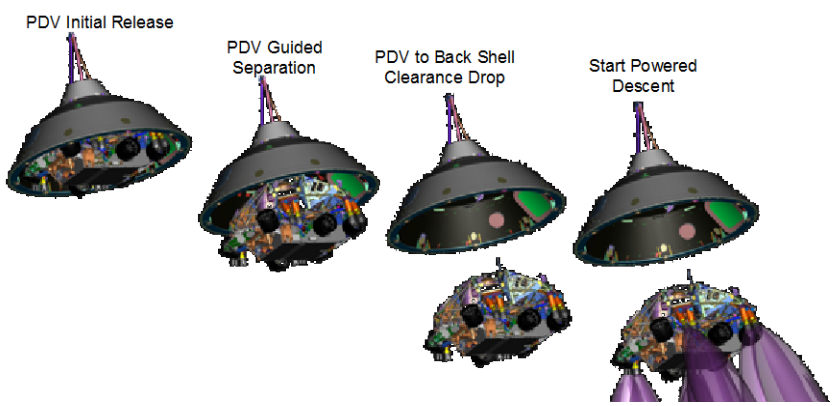

Figure 6. Powered Descent Vehicle (PDV) Separation from the Back Shell

Next the vehicle goes into a constant velocity descent at ~ 20 m/s, until an altitude of approximately 50 m is reached. This "constant velocity accordion" allows the system to accommodate errors in altitude knowledge that have accumulated in previous EDL segments. The MLEs are then throttled up to achieve a constant deceleration, resulting in a final vehicle velocity to approximately 0.75 m/s.

At this point in the landing sequence, more than half of the initial 400 kg of fuel has been consumed. In order to maintain thrust equal to weight, the MLEs would need to be throttled back to thrust levels on the order of 20-25%. Since the MLEs operate less efficiently at these throttle settings, four of the MLEs are throttled back to their near shutdown condition of 1%. This allows the four remaining MLEs to function in the more efficient range of 40% throttle[8].

Two seconds later the rover is deployed on its bridle while the vehicle continues to descend at 0.75 m/s (i.e., Sky Crane mode). The vehicle is descending at a constant rate and touchdown is detected by the reduced throttle settings commanded to the MLEs when the weight of the rover is supported by the surface. When touchdown is detected, the bridle is cut and the four remaining MLEs are throttled back up (to approximately 65%). The Descent Stage does a turn and burn maneuver to fly away, where it crash-lands a safe distance away from the rover.

A graphic representation of the overall EDL timeline is shown in Figure 7. A more thorough and detailed description of the EDL phase of the MSL mission can be found in Reference 8.

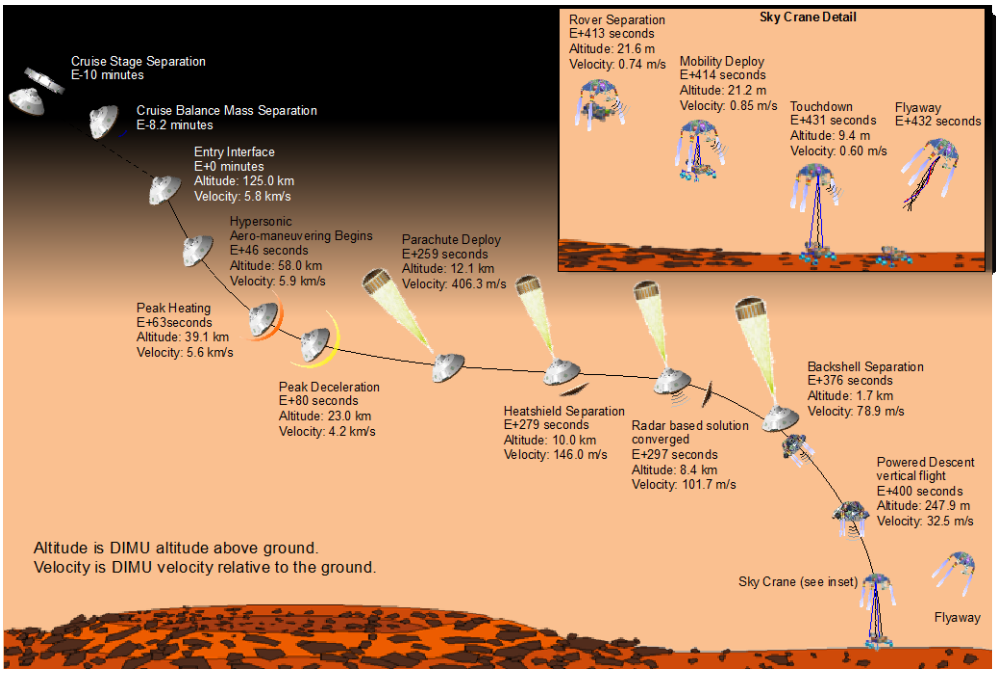

Figure 7. MSL Entry, Descent, and Landing (EDL) Timeline

KEY CHALLENGES

The System Flow Test Bed

Early on in the Development of the MSL Project, prior to its Preliminary Design Review (PDR), much discussion took place regarding the need for a hot fire test of a complete Descent Stage Propulsion System, simulating Powered Descent. Concerns existed regarding the overall performance of the propulsion system, feed system interactions, water hammer effects during use of the RCS as well as during priming of the propellant lines, characterization of pressure drop through the feed system, operation of the regulator in the actual flight configuration, plume interactions with the Martian soil, and structural interactions with the Descent Stage primary structure. The Viking Project built a full-scale Engineering Model (EM) propulsion system using a flight like structure and hot fire tested it at NASA's White Sands Test Facility in New Mexico in order to address many of these same issues. However, the cost associated with such a test for MSL would be extremely high.

The MSL Propulsion Team proposed an alternative and less expensive path, agreed to by the Project, to develop a high fidelity test bed of the integrated flight system design. The water-flow System Flow Test Bed (SFTB) became a critical tool to validate the analytical work that was the basis for the design of the propulsion system. It was built to replicate the key geometric and op-

erational characteristics of both the RCA and MLE feeds systems[9]. The SFTB served multiple purposes, including verification/validation of some of the key interactions (e.g., RCS water hammer), use as an empirical design tool for relatively large flow components (e.g., MLE flow distribution manifold), and investigation of possible unanticipated development issues. Figure 8 shows a collage of photographs of the SFTB. Reference 9 provides details on the RCS water hammer issue and how the SFTB was used to validate the analytical model developed at JPL and then verify the proposed solution to effectively eliminate water hammer concerns for the MSL RCS.

Figure 8. Photos of the MSL System Flow Test Bed

Concurrent Development of Multiple New Components

As discussed above, the Mars Lander Engine, Throttle Valve Assembly, ¾" Pyro Valve (and its Primer Chamber Assembly), Radial Arm Filter, and High Flow Pressure Regulator were all new propulsion components that went through a full development cycle and then qualification and acceptance testing. In addition, the propellant tanks and pressurant tanks, although based on heritage designs, had significant modifications made to them that resulted in the need to requalify the hardware. These efforts were occurring concurrently during Phase B-C of the Project. Traditionally, integrators of spacecraft propulsion systems attempt to minimize the number and complexity of new developments necessary for a specific mission, and utilize as much heritage hardware as possible. This is done to minimize both programmatic risk (cost and schedule during the development phase) as well as the risk associated with a flight failure of a new component. Unfortunately, MSL did not have that latitude. These new developments were required to enable the mission. In fact, only the pressure transducers and service valve did not require design and qualification work to meet the mission requirements. The effort to oversee and manage these de-

velopment efforts in parallel at multiple vendors was a huge challenge to the team at JPL. As one would expect, many of the component development efforts ran into significant technical problems. Some of those problems, and the lessons learned associated with them, are discussed in Reference 10.

Integration of the Descent Stage Propulsion System

The assembly and integration of the propulsion system onto the Descent Stage primary structure was one of the most complex that JPL had ever undertaken. Aside from the propulsion system, a lot of other hardware had to be mounted on the Descent Stage primary structure. Real estate was at a premium. So the location of the propulsion components and tanks, as well as the layout of the tubing and manifolds was severely constrained. This added complexity to the integration activity. Figure 9 shows a photograph of the Descent Stage Propulsion System taken prior to delivery to System level Integration and Test (I&T). Other than propulsion, the Descent Stage has not yet been populated with hardware, harnessing, or other components. The Propellant tanks are mounted in three of the hex panels. The pressurant tanks are mounted in two of the four MLE outriggers. Each outrigger supported two MLEs. The RCS thrusters can be seen, nozzle up, in four sets of pairs. Their nozzles will poke through holes in the back shell. Four propulsion plates are built up separately and then integrated onto the Descent Stage structure. The Pressurant Control Assembly (PCA), which houses the HFPR and the remainder of the pressurization system (e.g., gas side pyro valves) is mounted to one of the sides of a MLE outrigger. Another outrigger panel has the Fuel Control Assembly (FCA) attached to it. This plate houses the isolation valves for the RCS. Two plates containing the pyro valves that isolate the MLEs are mounted to the interior panels of the core hex assembly. Finally, the fill and drain valves are mounted on the proboscis that also houses the Descent Stage Radar. The resulting propellant and pressurant line routing is quite convoluted and made for a challenging integration.

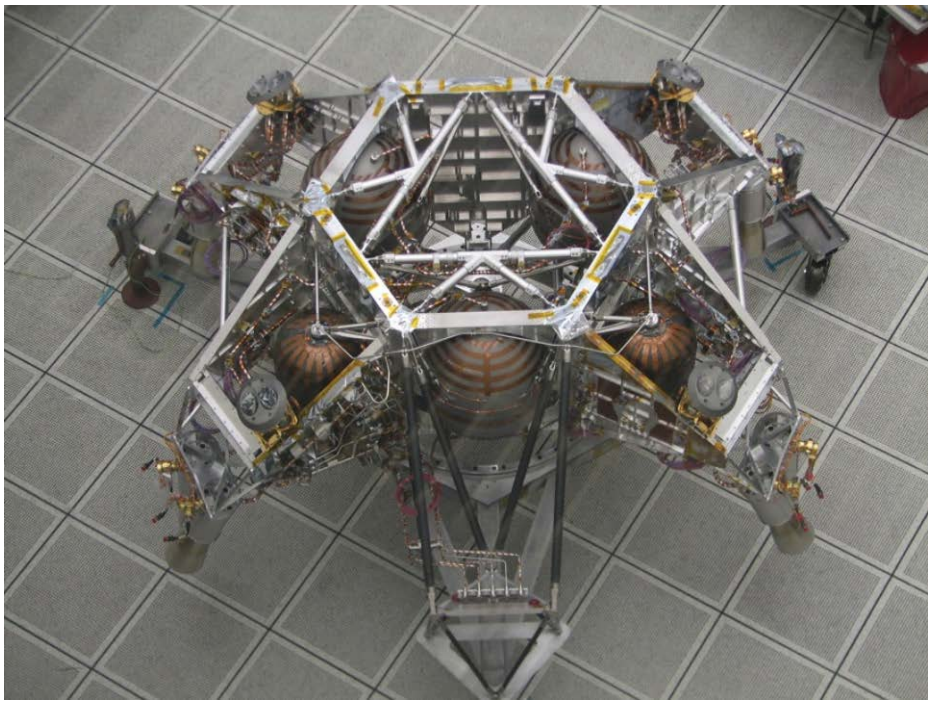

Figure 9. Photograph of the MSL Descent Stage Propulsion System During Integration

The large diameter tubing used in the propulsion system (to handle the very high flow rates) also played an important factor in the design of the layout and integration activities. The large diameter lines were much stiffer than those used in conventional spacecraft propulsion systems. This created several problems during integration. For one, orbital tube welding proved to be much more difficult. The butt welds were much more sensitive to tube alignment (because of the inflexibility of the tubes). Elaborate set ups and fixturing was often required to successfully weld the propulsion tubing together. In addition, the propellant lines were large enough to have stiffness comparable to that of the primary structure, potentially allowing for shunting of loads into the tubing, which would in turn induce high stresses on the tubes[10]. For MSL the propellant and pressurant lines had to be modeled in the system structural model. The modeling showed that there were multiple locations that were seeing unacceptable stresses. By re-routing the propulsion lines, as well as changing tube materials in some locations, these problems were resolved. Reference 10 provides additional detail on the lessons learned regarding line routing of large diameter propulsion tubing. Reference 11 provides additional detail on the challenges encountered in fabrication, assembly, and test of the subsystem.

CONCLUSIONS

The development of the Descent Stage Propulsion System at JPL was an enormous, but exciting undertaking. New analysis tools and modeling techniques were developed, along with improved integration and test processes for large, high thrust propulsion systems. The System Flow Test Bed was developed and is now available for testing by future missions. And many valuable lessons learned came out of this development effort that can be applied to future Mars Landers.

The Curiosity Rover is now traversing the surface of Mars. Preliminary analysis of the EDL reconstruction data transmitted back to earth shows that the Descent Stage Propulsion System operated well within its acceptable operating ranges.

ACKNOWLEDGMENTS

The research described in this paper was carried out at the Jet Propulsion Laboratory, California Institute of Technology, under a contract with the National Aeronautics and Space Administration.

REFERENCES

[1] *Hagopian, M.; McDugle, S.; Saulsberry, R.;* **"NESC Independent Assessment of Pyrovalve Ground Test Anomalies"**, 44th AIAA/ASME/SAE/ASEE Joint Propulsion Conference and Exhibit, Paper No. AIAA 2008-4798, July 2008.

[2] *Dawson, M.; Brewster, G.; Contrad, C.; Kilwine, M.; Chenevert, B.; Morgan, O.;* **"Monopropellant Hydrazine 700 lbf Throttling Terminal Descent Engine for Mars Science Laboratory"**, 43rd AIAA/ASME/SE/ASEE Joint Propulsion Conference and Exhibit, Paper No. AIAA 2007-5481, July 2007

[3] *Dawson, M.; Brewster, G.; Conrad, C.; Kilwine, M.; Chenevert, B.;* **"Development of a 700 lbf Terminal Descent Engine for Mars Science Laboratory"**, 54th Joint Army-Navy-NASA-Air Force (JANNAF) Propulsion Meeting, May 14-18, 2007, Denver, Colorado.

[4] *Luce, K.; Kerl, P.;* **"Mars Science Laboratory Descent Engine Throttle Valve Assembly for Propellant Supply"**, 54th Joint Army-Navy-NASA-Air Force (JANNAF) Propulsion Meeting, May 14-18, 2007, Denver, Colorado.

[5] *Mizukami, M.; Yankura, G.; Rust, T.; Anderson, J.; Dien, A.; Garda, H.; Bezer, M.; Johnson; D., Arndt, S.;* **"Space Shuttle 750 psi Helium Regulator Application On Mars Science laboratory Propulsion"**, 45th AIAA/ASME/SAE/ASEE Joint Propulsion Conference and Exhibit, Paper No. AIAA 2009-5489, August 2009.

[6] *Zenz, Z.; Schummer, S.; Pender, A.; Mizukami, M.;* **"Stainless Steel Primer Chamber Assemblies for Dual Initiated Pyrovalves,"**, JANNAF Joint Subcommittee Meeting, December 2008

[7] *Saulsberry, R.; McDougle, S.; Garcia, R.; Johnson, K.; Sipes, W.; Rickman, S., Hosangadi, A.;* **"Innovative Comparison of Transient Ignition Temperature at the Booster Interface, New Stainless Steel Pyrovavle Primer Chamber Assembly "V" (PCA) Design versus the Current Aluminum "Y" PCA Design"**, 47th AIAA/ASME/SAE/ASEE Joint Propulsion Conference and Exhibit, Paper No. AIAA 2011-5732, August 2011.

[8] *Prakash, R.; Burkhart, P.D.; Chen, A.; Comeaux, K.A.; Guernsey, C.S.; Kipp, D.M.; Lorenzoni, L.V.; Mendeck, G.F.; Powell, R.W.; Rivellini, T.P.; San Martin, A.M.; Sell, S.W.; Steltzner, A.D.; Way, D.W;* **"Mars Science Laboratory Entry, Descent, and Landing System Overview"**, 2008 IEEE Aerospace Conference, Paper No. 1095-323X, March 2008.

[9] *Casillas, A.R.; Guernsey, C.S.;* **"MSL Water-Hammer Mitigation Strategy"**, JANNAF Spacecraft Propulsion Subcommittee Meeting, December 2008.

[10] *Guernsey, C.S.; Weiss, J.M.;* **"Lessons Learned from the Development of the MSL Descent Stage Propulsion System"**, AAS Paper No. 13-457, 23rd AAS/AIAA Space Flight Mechanics Meeting, February 2013

[11] *Parker, M.; Baker, R.; Casillas, A.; Stommen, D.; and Takimoto, R.;* **"Fabrication, Assembly, & Test of the Mars Science Laboratory (MS) Decent Stage Propulsion System,"** 23rd AAS/AIAA Space Flight Mechanics Meeting, AAS Paper No. 13-461, February 2013