Reliability of Semiconductor Laser Packaging in Space Applications

Ivair Gontijo, Yueming Qiu, Andrew A. Shapiro
Jet Propulsion Laboratory
California Institute of Technology
4800 Oak Grove Drive
Pasadena, California, 91109, USA

Abstract:

A typical set up used to perform lifetime tests of packaged, fiber pigtailed semiconductor lasers is described, as well as tests performed on a set of four pump lasers. It was found that two lasers failed after 3200, and 6100 hours under device specified bias conditions at elevated temperatures. Failure analysis of the lasers indicates imperfections and carbon contamination of the laser metallization, possibly from improperly cleaned photo resist. SEM imaging of the front facet of one of the lasers, although of poor quality due to the optical fiber charging effects, shows evidence of catastrophic damage at the facet.

More stringent manufacturing controls with 100% visual inspection of laser chips are needed to prevent imperfect lasers from proceeding to packaging and ending up in space applications, where failure can result in the loss of a space flight mission.

The use of semiconductor lasers in space flight missions has been increasing steadily with applications in Laser Altimeters, Metrology, on-board fiber optic communications, Spectroscopy studies and future life detection fluorescence experiments on the Martian surface. Although these lasers undergo various reliability and lifetime tests by their manufacturers[1], [2],[3], such tests are often performed in conditions that relevant to industrial applications and often they do not mimic real operation in space. Even when the lasers are subjected to the extensive Telcordia GR468 test Qualifications used in the fiber optics industry, the tests are performed to qualify the design and manufacturing processes, not a single specific lot of lasers. Also, requirements of high temperature thermal vacuum, radiation hardness and survival to the vibration spectrum of launch vehicles tend to be confined to space applications only and normally manufacturers are not equipped to perform them.

Despite the extensive testing and qualification performed by laser manufacturers, there have been frequent laser failures in space. In one case of laser application in satellites with triple laser redundancy, two lasers survived only about a month in space and the third was operated at much reduced specifications. The laser losses were traced to premature failure of the pump laser diode arrays.[4] Such repeated failures have caused

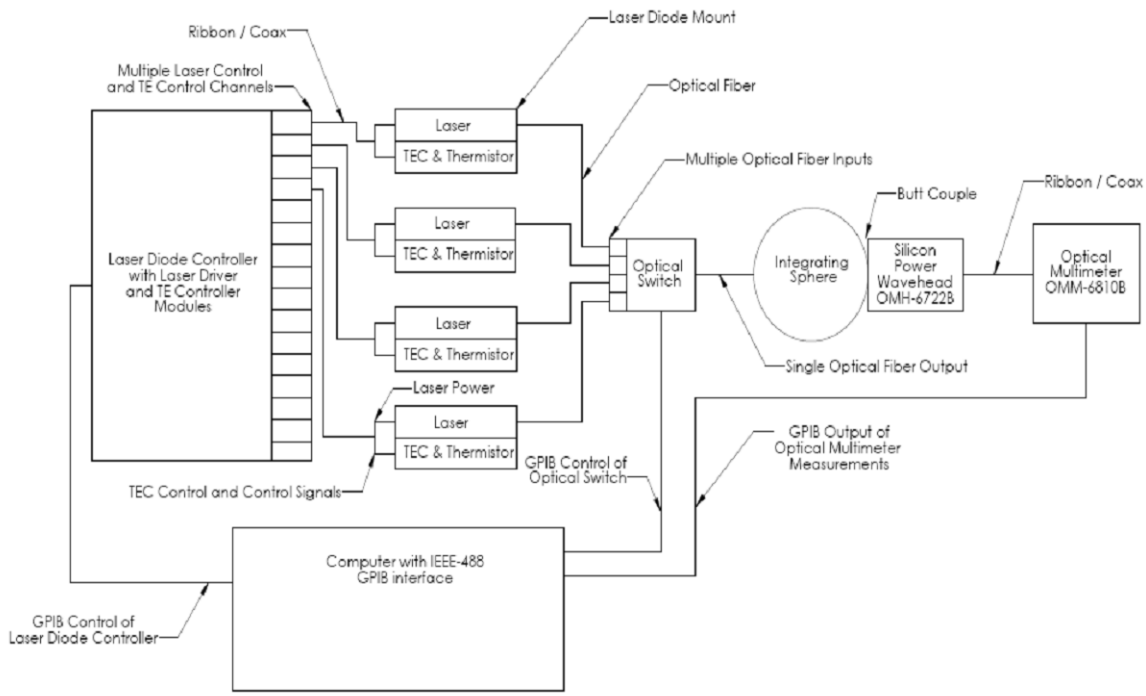

Fig. 1 – Typical set-up for Laser Reliability and Lifetime Experiments.

serious concerns on the use of lasers in space. Therefore, in many cases space flight mission planners have found it necessary to re-test the lot of lasers to be used in a space mission.[5]

In Fig 1 we present a typical set-up to test laser lifetime, where parameters such as laser output power, wavelength, input current and laser voltage are monitored as a

function of time or number of laser pulses, while environmental conditions such as temperature and pressure can be varied.

In our specific set-up, fiber pigtailed pump lasers operating around 800 nm were tested. These lasers are potential candidates to be used as pump sources for a Diode Pumped Solid State Laser in a flight mission and despite the manufacturer's previous tests, it was found that two out of 4 lasers failed during the tests described below. As mentioned before this seems to be a common situation, as a semiconductor pump laser is a complex device with many parts having multiple failure modes, some due to the semiconductor material itself, others due to the packaging or an interaction of both.

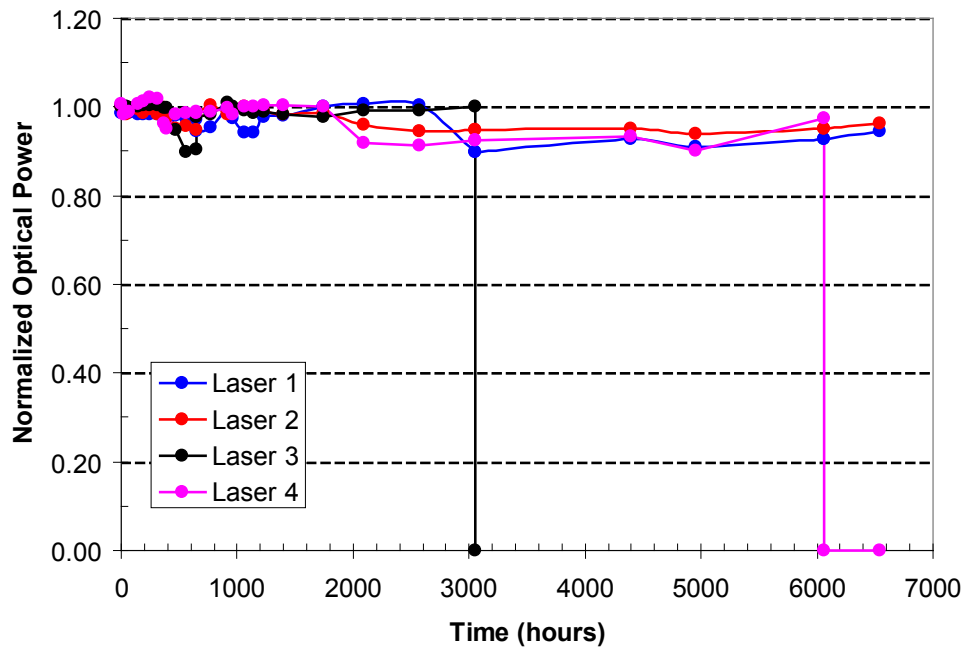

Fig. 2 – Normalized lifetime data for 4 fiber pigtailed laser diodes. Diodes 3 and 4 failed after 3200 hour sand 6000 hours, with no optical output.

Lifetime data collected from a set of 4 fiber-pigtailed pump semiconductor lasers is shown in Fig. 2. The lasers were biased at specified bias conditions at elevated temperatures. Typical bias current is about 200 mA and the laser temperatures were controlled above 40 C, where the lasers' emission wavelengths were locked by an internal stabilization process. This was a preliminary set of measurements, before more drastic tests involving thermal vacuum were attempted. It is surprising that two of the laser diodes failed after 3200, and 6100 hours.

The failure analysis of the laser diode number 3 will be presented next. First it was found that the optical fiber was intact and increasing the laser driver current did not produce any light output. The laser package was de-lidded, exposing the laser assembly to further failure analysis. Fig. 3 below shows the typical butterfly package construction of this pump laser, which is well described in various publications.[6] A careful inspection of the laser package interior did not reveal any obvious sign of damage, but the semiconductor chip stopped lasing, as evidenced by an inspection with an infrared viewer. Upon further inspection both with an optical microscope and a Scanning Electron Microscope (SEM), it was found that the laser chip had several brown spots on the

contact metallization, as shown in Fig. 4, which is a contrast-enhanced SEM image. Energy Dispersive Spectroscopy (EDAX) revealed only Carbon (and Gold) on the dark spots, which were formed possibly during improper cleaning after photo resist removal. Although these contamination spots are highly undesired, they cannot be the cause of the laser failure. Typically, semiconductor lasers show catastrophic failure with very clear damage.

As the laser chip is still mounted in the housing, we tried to obtain images of the laser facets to look for catastrophic damage. The back facet is obscured by the monitor photodiode and could not be imaged in the SEM. It is slightly easier to image the front facet of the laser, but the bare optical fiber is a few microns in front of the facet and, being a dielectric, caused serious charging and image distortion. One of the best pictures obtained is shown below in Fig. 5, which shows evidence of facet damage under the optical waveguide ridge. Although the image is not very clear, it seems that the laser failed through one of the most common laser chip failure modes, i.e., facet damage. This is normally associated with contamination caused either by dust particles settling on the laser facet or some form of contamination not removed during the semiconductor chip manufacturing steps and not detected by visual inspection during laser packaging.

Conclusion:

Packaged semiconductor lasers have many failure modes stemming from the semiconductor device, the packaging or from a combination of both. Four fiber-pigtailed semiconductor pump lasers were subjected to a standard lifetime test under realistic (de-rated) space application conditions and one laser failed after 3200 hours of operation. Failure analysis did not reveal any obvious packaging problem, but the semiconductor chip had several contamination spots on the laser metallization. SEM imaging of the front laser facet shows evidence of catastrophic damage, but the image quality is poor due to the dielectric optical fiber charging effects.

It seems that more rigorous 100% visual inspection is necessary during the semiconductor laser chip fabrication to avoid imperfect devices going through packaging and ending up in a space environment, where a laser failure can represent the end of a mission.

Acknowledgement:

The research described in this paper was carried out at the Jet Propulsion Laboratory, California Institute of Technology, under a contract with the National Aeronautics and Space Administration.

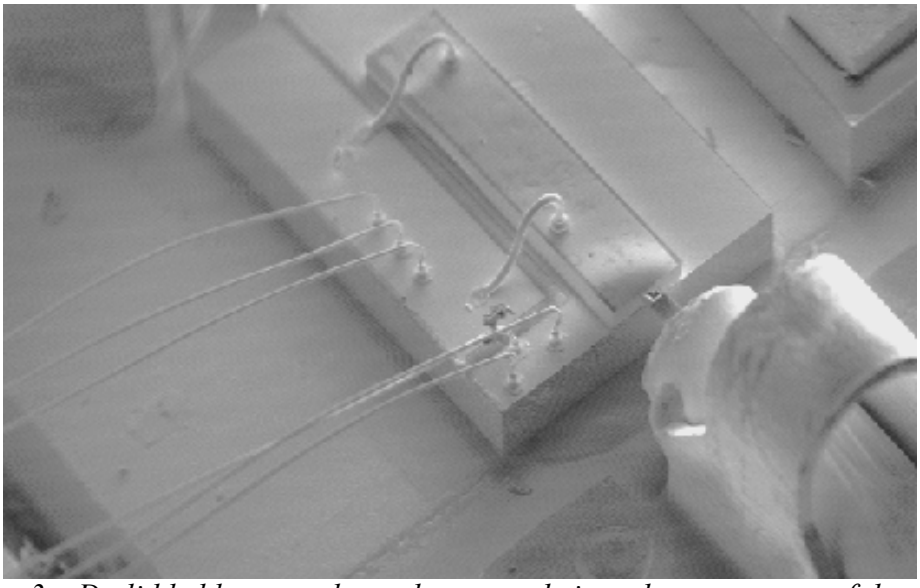

Fig. 3 – De-lidded laser package shows no obvious damage to any of the components in the assembly.

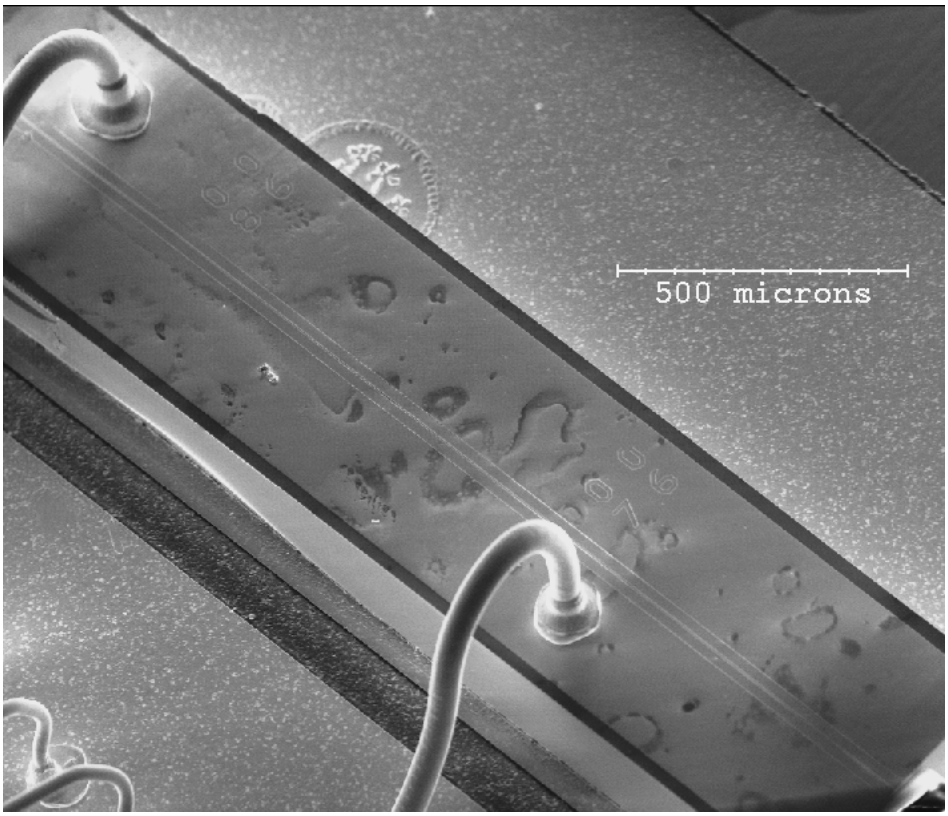

Fig. 4 – Contrast-enhanced SEM picture highlights the dark spots on the laser metallization.

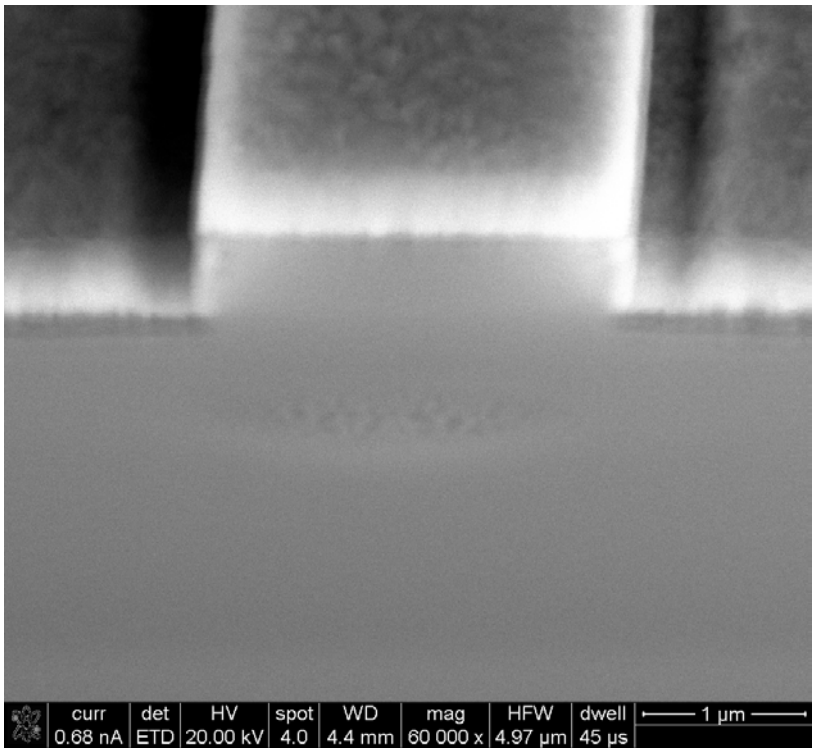

Fig. 5 – Laser front facet, showing evidence of facet damage under the ridge optical waveguide. The image blur is caused by charging of the optical fiber still mounted a few microns in front of the laser.

References:

[1] – E. Stiers, M. kanskar, "High-reliability high-efficiency 976-nm diode laser pump sources", in High-Power Diode Laser Technology and Applications III, ed. by Mark S. Zediker, Proc. Of SPIE, Vol. 5711, 30-34, 2005.

[2] - K. Luo, A. K. Chin, Z. Xu, A. Nelson, W. Gao, "Long-term reliability of high power single model 980 nm pump laser diodes", in High Power Fiber and Semiconductor Lasers, ed by M. Fallahi and J. V. Moloney, Proc. Of SPIE, Vol. 4993, 77-83, 2003.

[3] – B. Lu, E. Zucker, E. Wolak, R. Dohle, D. Zou and S. Bicknese, "High Power, high reliability CW and QCW operation of single AlGaAs laser diode array design", in Laser Diodes and LEDs in Industrial, measurement, Imaging and Sensors Applications II: Testing Packaging and reliability of Semiconductor Lasers V, ed. by Burnham, He, Linden, Wang, Proc of SPIE, Vol 3945, 293-300, 2000.

[4] - W. S. Heaps, "Progress in laser risk reduction for 1 micron lasers at GSFC", Proceedings of SPIE - The International Society for Optical Engineering, v 6550, Laser Radar Technology and Applications XII, 2007, p 65500Y

[5] – M. W. Wright, D. Franzen, H. Hemmati, H. Becker and M. Sandor, "Qualification and reliability testing of a commercial high-power fiber-coupled semiconductor laser for space applications", Optical Engineering, 44 (5), 054204, 2005.

[6] - Yi-Cheng Hsu, Jao-Hwa Kuang, Ying-Chien Tsai, and Wood-Hi Cheng "Investigation and Comparison of Postweld-Shift Compensation Technique in TO-Can- and Butterfly-Type Laser-Welded Laser Module Packages", Ieee Journal Of Selected Topics In Quantum Electronics, Vol. 12, NO. 5, 961-969, 2006.