# Incorporation of Uncertainties in the Mars Science Laboratory Rover Loads Analysis

Chia-Yen Peng, Mike Lih and Gary Ortiz

Jet Propulsion Laboratory
California Institute of Technology

June 8-10, 2010

© The Aerospace Corporation 2010

# Mars Science Laboratory

*The Next Mission to Mars*

- Mars Science Laboratory (MSL) scheduled to be launched in 2011
  - *Mobile Science Laboratory*
  - *One Mars year surface operational lifetime (687 days)*
  - *Discovery responsive over wide range of latitudes and altitudes*
  - *Precision landing via guided entry*
  - *Controlled propulsive landing: Skycrane Touchdown Maneuver*
  - *Mission science will focus on Mars habitability*
  - *Next generation analytical laboratory science investigations*

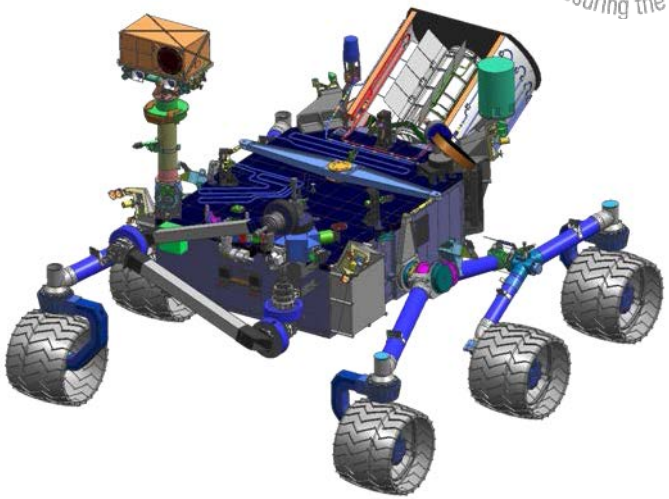

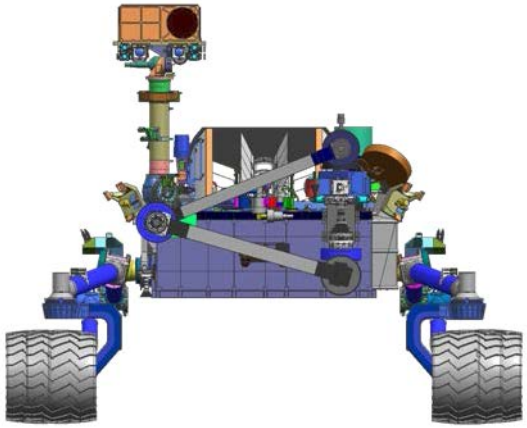

# Skycrane Touchdown Maneuver

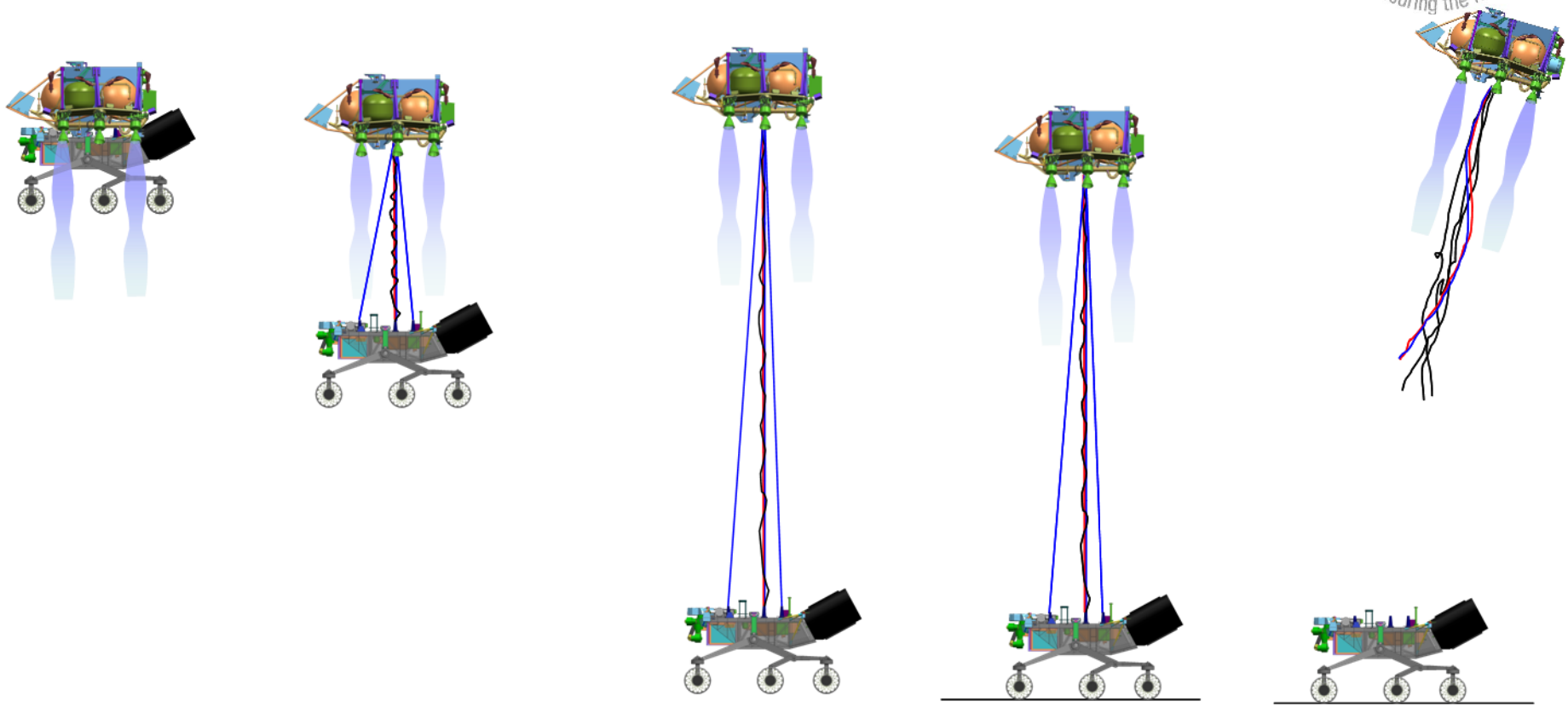

**One Body Phase (Vertical Descent)**

**Two Body Phase (DRL/Bridle Deployment)**

**Two Body Phase (Constant Velocity)**

**Two Body Phase (Touchdown Event)**

**Fly-Away Phase**



AEROSPACE

# Skycrane Maneuver Timeline

Rover Separation via BUD

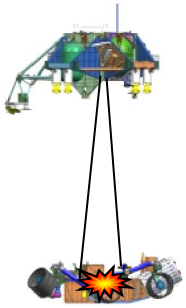

Mobility Deploy - Rocker Release (Rover Sep + 3s)

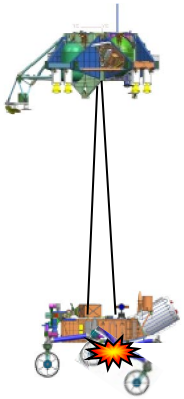

Mobility Deploy - Bogie Release (Rover Sep + 4.5s)

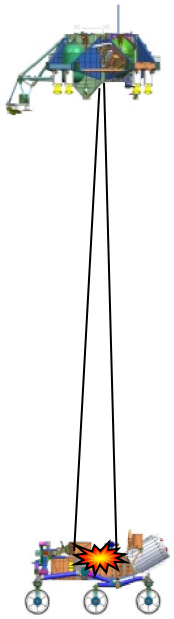

Touchdown (Rover Sep + 9 to 17s)

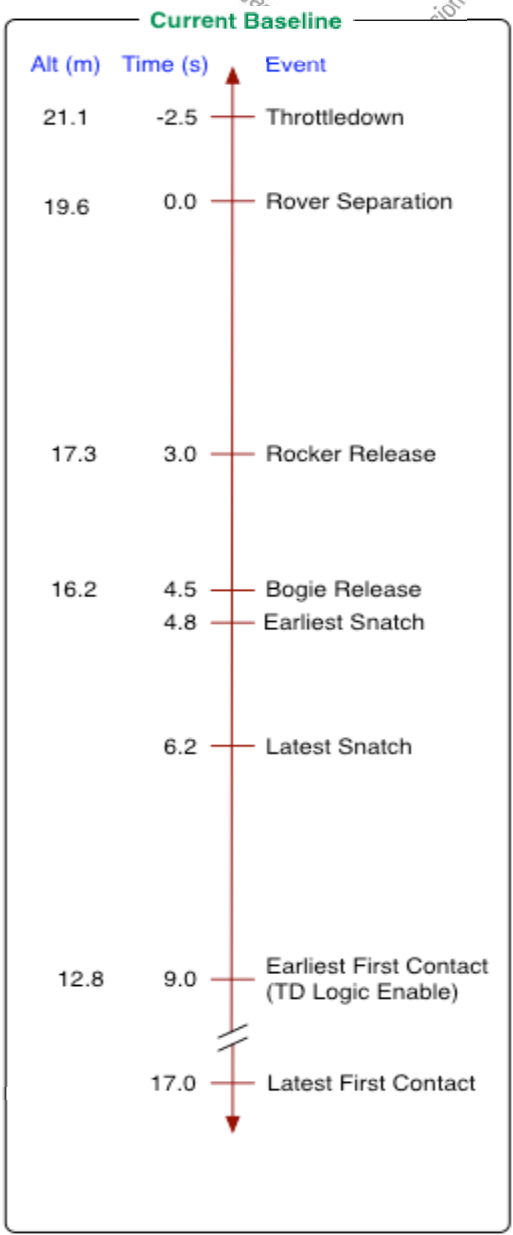

# ADAMS Simulation of Skycrane Maneuver

# ADAMS Simulation of Skycrane Maneuver

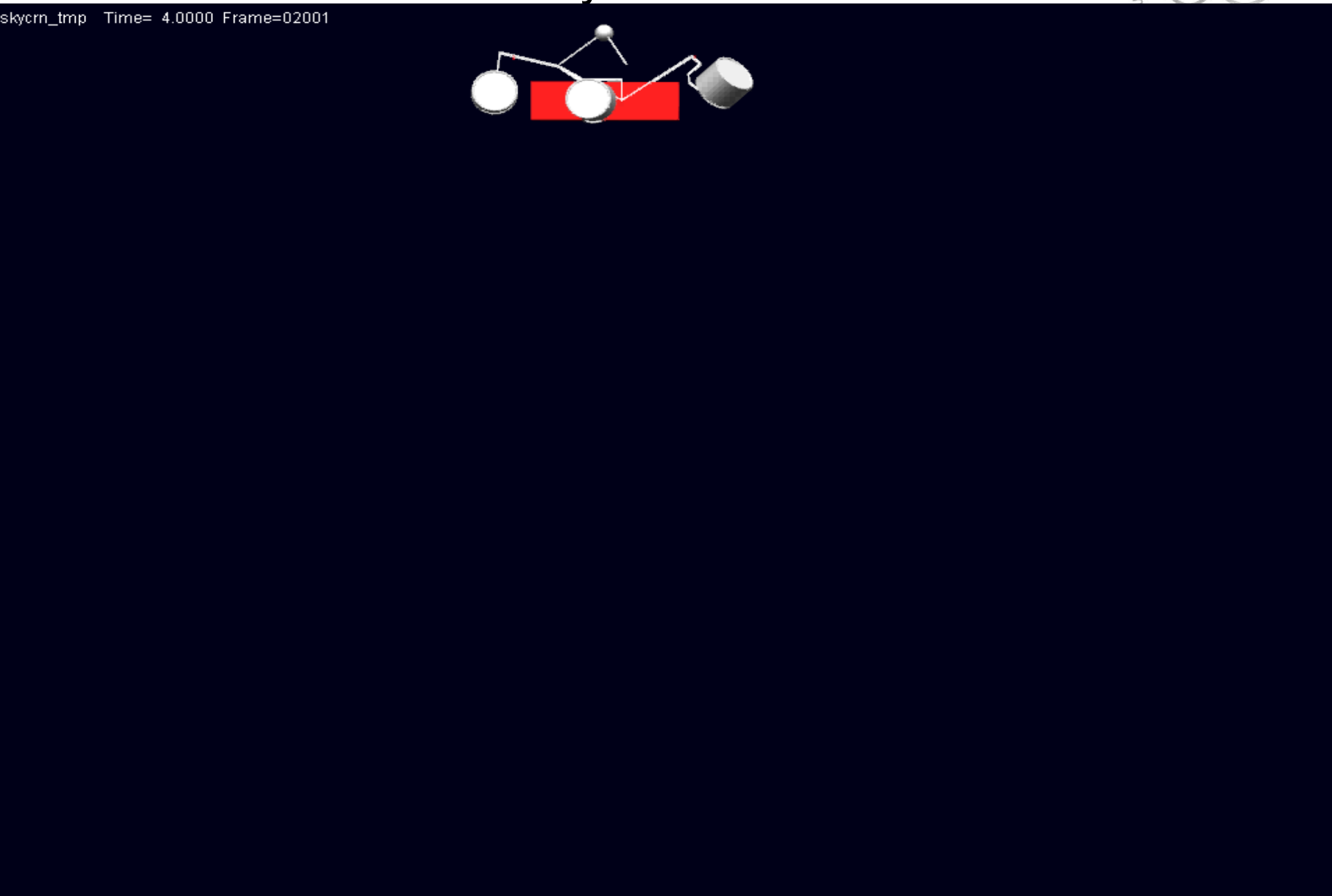

# Skycrane Monte Carlo Simulation

- Due to the complex dynamics during the Skycrane maneuver phases, the Rover mobility deploy design loads methodology employs the Monte Carlo simulation technique to take into account the loads uncertainty.
- Parameter values and dispersions documented with configuration control memos and tables
- Use 2,000 Monte Carlo simulations to generate “case consistent” mobility deploy design loads at 99th percentile with a MUF of 1.2

*Absolute min/max Fx at wheel-1 from 2,000 runs*

*The rest of force/moment components from run 1154*

*Run ID producing absolute max/min Fx at wheel-1*

| Item | FXa (N) | FYs (N) | FZs (N) | FMs (N) | MXt (N-M) | MYb (N-M) | MZb (N-M) | MMb (N-M) | RUN ID. |
|---|---|---|---|---|---|---|---|---|---|
| W1_FX (N) | | | | | | | | | |
| W1_FY (N) | | | | | | | | | |
| W1_FZ (N) | | | | | | | | | |
| W1_FM (N) | | | | | | | | | |
| W1_MX (N-M) | | | | | | | | | |
| W1_MY (N-M) | | | | | | | | | |
| W1_MZ (N-M) | | | | | | | | | |
| W1_MM (N-M) | | | | | | | | | |
| W2_FX (N) | | | | | | | | | |
| W2_FY (N) | | | | | | | | | |
| W2_FZ (N) | | | | | | | | | |
| W2_FM (N) | | | | | | | | | |

# Monte Carlo Inputs & Dispersions

*GNC Parameters*

- Flight GNC codes incorporated into closed-loop ADAM multi-body Skycrane simulation
  - *No dispersions on delays*
    - Avionics delay
    - MLE response delay
    - Pyro response delay
  - *MLE thrust variations*
    - Implemented in ADAMS by applying eight MLE thrust multipliers to the thrust values received from the GNC module
    - At the beginning of each run, the MLE thrust multipliers are independently dispersed uniformly for each respective MLE
  - *Target ready-for-touchdown velocities*
    - $V_h$ = 0.00 m/sec
    - $V_v$ = 0.75 m/sec

# Monte Carlo Inputs & Dispersions (cont.)

*Descent Stage Parameters*

- Wet descent stage modeled as a rigid body with allocation values of mass and mass moments of inertia
- Wet descent Stage C.M. location normally dispersed

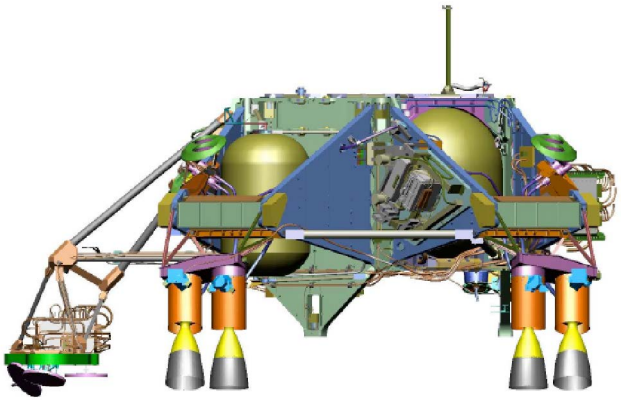

**Coord Sys: DESCENT**

| | | (kg) | (mm) | | | (kg*m^2) | | | | | | (kg) |
|---|---|---|---|---|---|---|---|---|---|---|---|---|
| | | **Mass** | **Cx** | **Cy** | **Cz** | **Ixx** | **Iyy** | **Izz** | **Ixy** | **Ixz** | **Iyz** | **Propellant Mass** |
| **CBE** | **DS @ RV sep** | | | | | | | | | | | |
| | **DS @ RV snatch** | | | | | | | | | | | |
| **@ALLOC** | **DS @ RV sep** | | | | | | | | | | | |
| | Uncertainty | | | | | | | | | | | |
| | **DS @ RV snatch** | | | | | | | | | | | |
| | Uncertainty | | | | | | | | | | | |

# Monte Carlo Inputs & Dispersions (cont.)

*Rover Chassis/Mobility Parameters*

- Based on mobility deploy test/model correlation, bogie pose angles and bogie settling time are sensitive to Rover chassis mass properties, especially chassis Iyy.
- As a result, all the mass properties (mass, CMx, CMy, CMz, Ixx, Iyy, Izz, Ixy, Ixz, Iyz) of the Rover chassis are conservatively dispersed by MSL mass engineer.

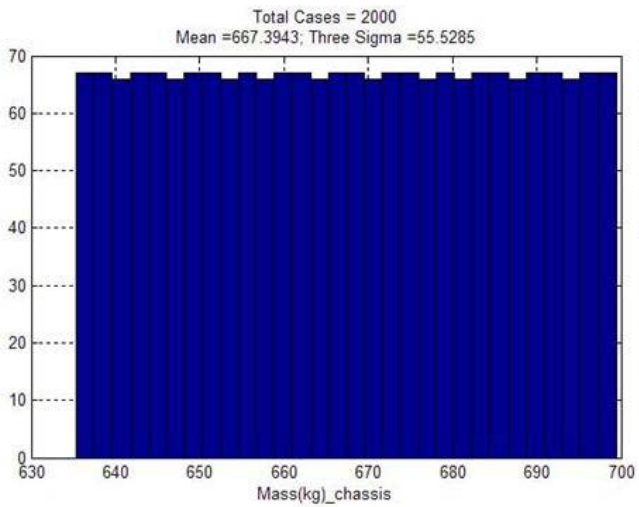


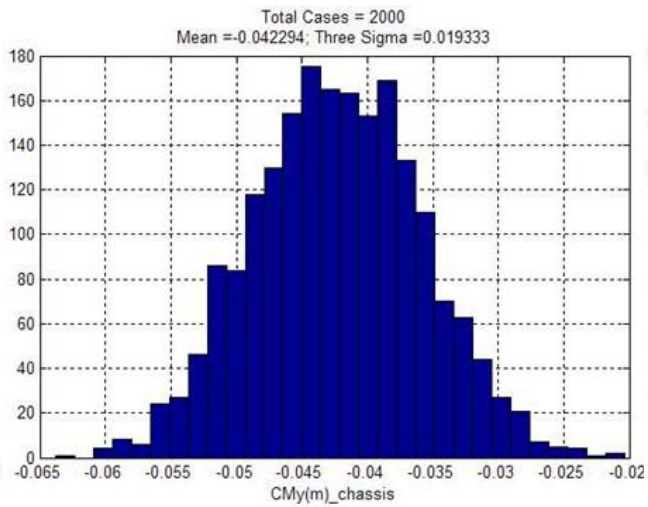


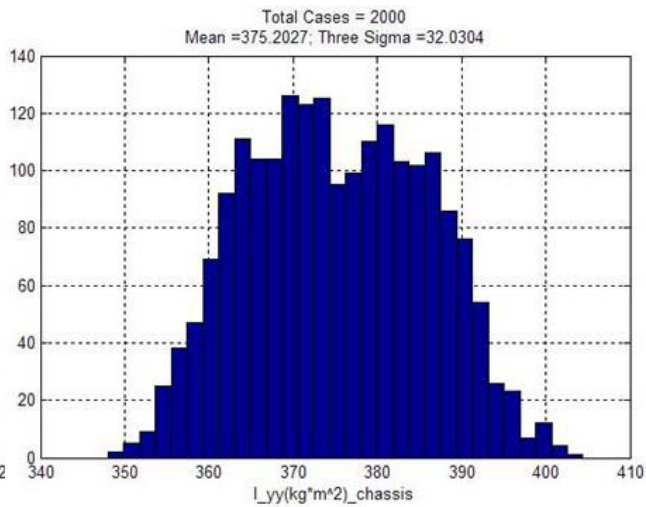


- Mass properties of flexible mobility system are not dispersed.

# Monte Carlo Inputs & Dispersions (cont.)

*Bridle and Umbilical Device Parameters*

- Dispersions of bridle slack, stiffness and BUD brake coefficient
  - *Bridle stiffness uniformly dispersed*
  - *Constant bridle damping, a conservative estimate*
  - *Equivalent descent brake coefficient uniformly dispersed*
  - *Uniform slack of all three bridles uniformly dispersed*
  - *Differential slack of each bridle uniformly dispersed*

- Umbilical force modeled by a “sawtooth” bounding profile of test data

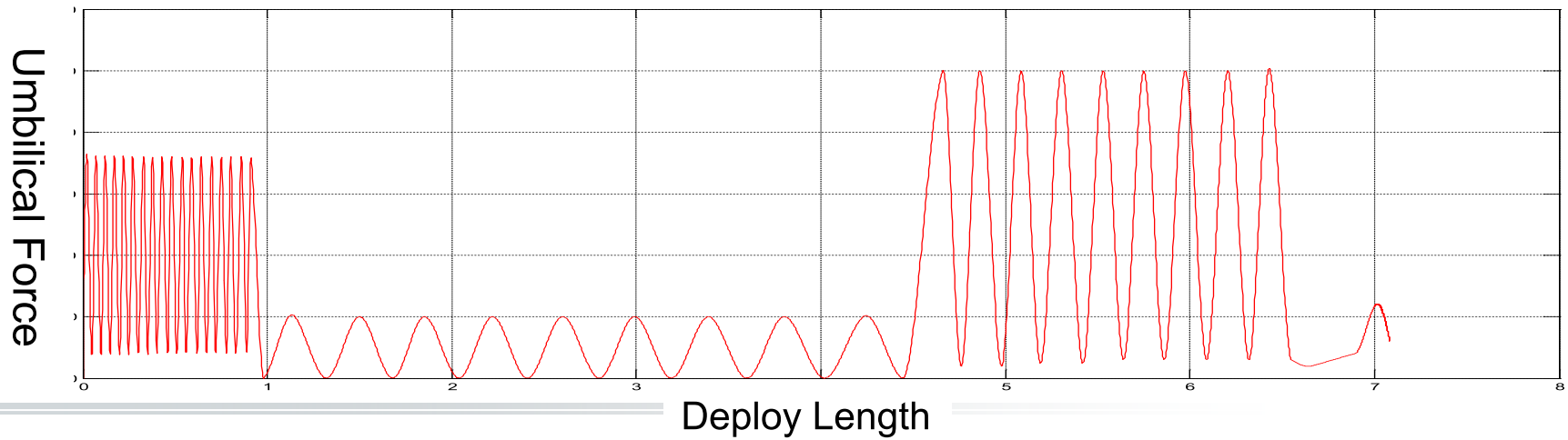

# Monte Carlo Inputs & Dispersions (cont.)

*Mobility Deploy Parameters*

- Uniform dispersions of stiffness, damping, friction and drag parameters
  - *Bogie pivot constant force spring*
  - *Bogie pivot Coulomb friction*
  - *Bogie pivot viscous damping*
  - *Rocker deploy pivot Coulomb friction*
  - *Rocker deploy pivot viscous damping*
  - *Center differential pivot spring*
  - *Center differential pivot drag*
  - *Main differential pivot drag*

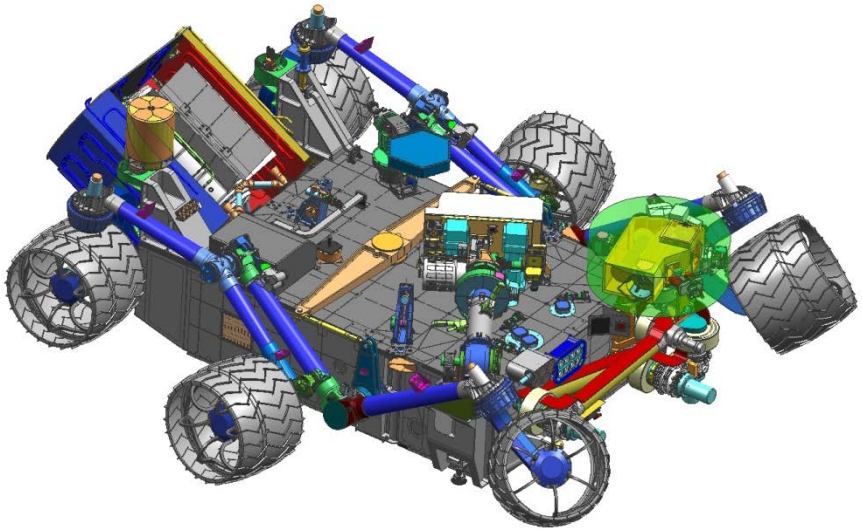

- Constant mobility deploy times
  - *Aft rocker release*
  - *Fwd rocker release*
  - *Bogie release*
  - *Late TD, sim stop*

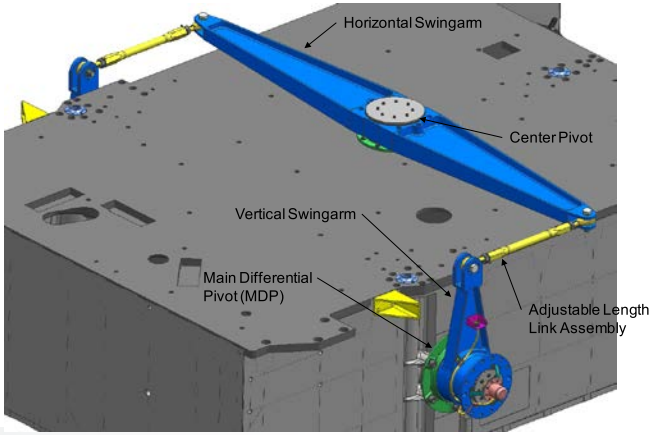

# Representative Results (cont.)

*Mobility Deploy Loads*

- Based on the 99th percentile mobility deploy loads with a MUF of 1.2, small or negative margins are observed at critical locations such as center differential pivot, horizontal swing arm, vertical swing arm, bogie pivots, rocker pivots, mid-wheel restraints/hardstops, etc.

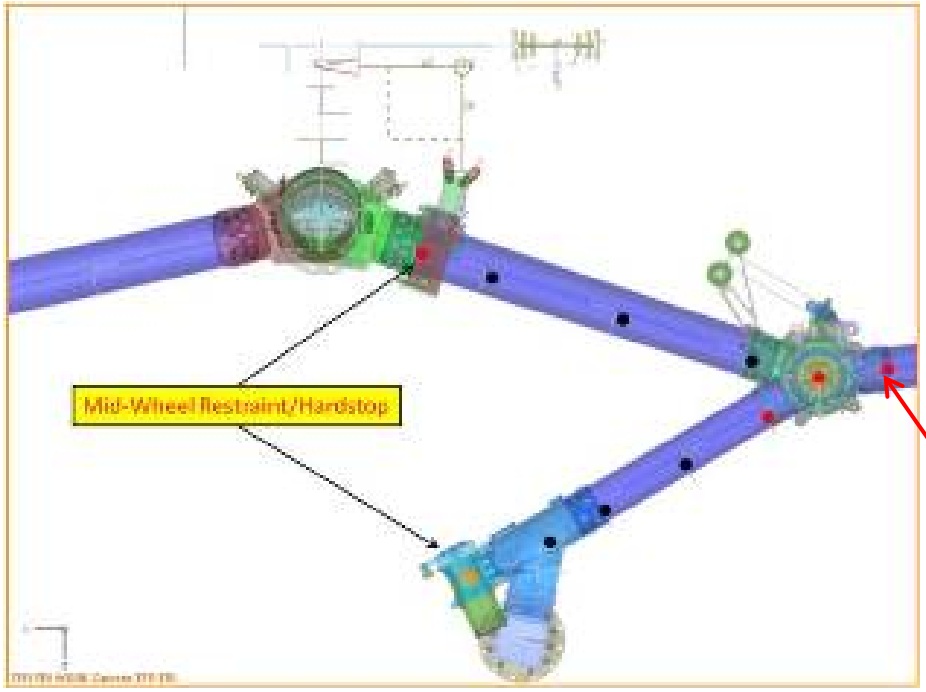


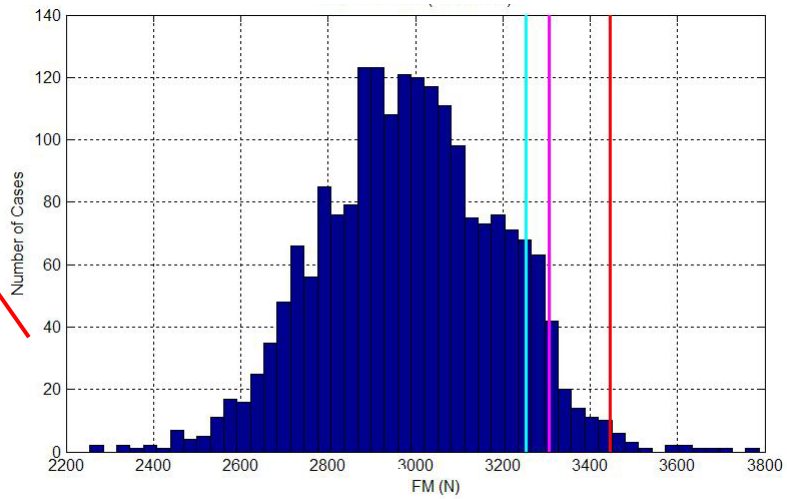


- As shown by the Monte Carlo simulation results, a hardware re-design is required to get positive and robust margins in the Rover mobility system.

# Representative Results (cont.)

*Bridle and Umbilical Device Loads*

- The following figures illustrate the typical descent brake torque/velocity with a MUF of 1.0 from the 99th percentile maximum torque case.

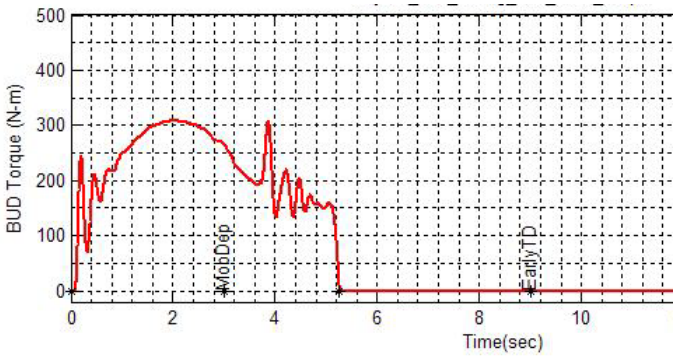


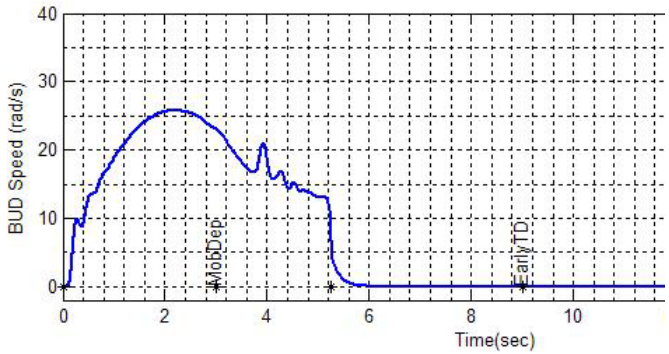


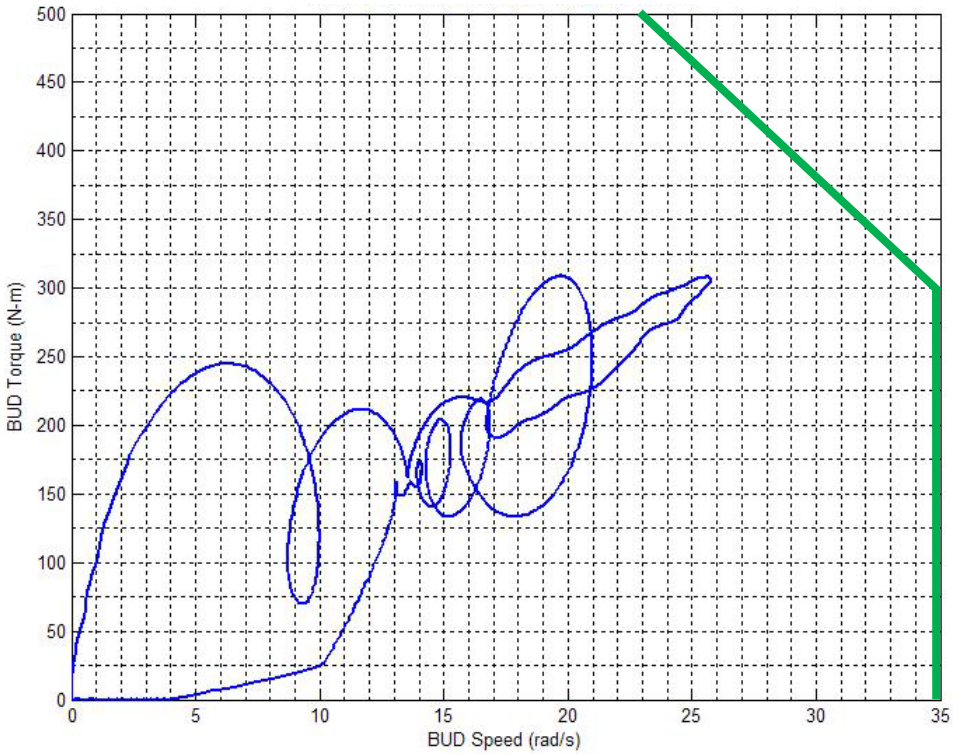


- As shown above, the descent brake loads show good margins vs. the current capability envelop, as shown by the green line.

# Representative Results (cont.)

*Ready-for-Touchdown States*

- Based on the 99th percentile Rover chassis states with a MUF of 1.0 during the touchdown window from 8.4 sec to 17 sec after the Rover separation, ready-for-touchdown states from the 2,000 Monte Carlo runs are compared to the ready-for-touchdown "box" in the following table.

| 99th Percentile of Ready-for-TD States | Kb x [0.45, 1.38], Cb =100, LUF=1.0 2000 MC Runs (Soft Nylon Bridles) | Current "Box" of Ready-for-TD States |
|---|---|---|
| Pitch Angle (deg) | 10 | 6 |
| Roll Angle (deg) | 6 | 6 |
| Pitch Rate (deg/sec) | 24 | 25 |
| Roll Rate (deg/sec) | 17 | 25 |
| Bogie Pose Angle (deg) | 33 | 15 |
| Rocker Angle (deg) | 10 | 10 |

- As shown above, the ready-for-touchdown states are outside the "box" that will significantly decrease the landing load margins due to a non-quiescent Rover at touchdown.



AEROSPACE

# Conclusions

- Instead of using a constant LUF (Load Uncertainty Factor), the Monte Carlo technique is incorporated into the ADAMS Skycrane simulations to take into account the uncertainty of the Rover mobility deploy loads, bridle and umbilical device loads and ready-for-touchdown states.
- Additional constant MUFs (Model Uncertainty Factors) are applied too based on the model correlation results of bridle and umbilical device tests, mobility deploy tests and touchdown tests.
- Based on the Monte Carlo simulation results with appropriate MUFs, the MSL project has made a very critical decision to implement a mobility deploy energy mitigation device to ensure <u>robust margins</u> across the entire Skycrane system.
  - *Bridle and Umbilical Device Loads (MUF = 1.0)*
  - *Mobility Deploy System Loads (MUF = 1.2)*
  - *Ready-for-Touchdown States (MUF = 1.0)*
- *Look forward to the next successful mission to Mars.*



AEROSPACE