Simplified Ion Thruster Xenon Feed System For NASA Science Missions

IEPC-2009-064

Presented at the 31st International Electric Propulsion Conference,
University of Michigan • Ann Arbor, Michigan • USA
September 20 – 24, 2009

John Steven Snyder,* Thomas M. Randolph,* Richard R. Hofer,* and Dan M. Goebel†
Jet Propulsion Laboratory, California Institute of Technology, Pasadena, CA, 91109

The successful implementation of ion thruster technology on the Deep Space 1 technology demonstration mission paved the way for its first use on the Dawn science mission, which launched in September 2007. Both Deep Space 1 and Dawn used a "bang-bang" xenon feed system which has proven to be highly successful. This type of feed system, however, is complex with many parts and requires a significant amount of engineering work for architecture changes. A simplified feed system, with fewer parts and less engineering work for architecture changes, is desirable to reduce the feed system cost to future missions. An attractive new path for ion thruster feed systems is based on new components developed by industry in support of commercial applications of electric propulsion systems. For example, since the launch of Deep Space 1 tens of mechanical xenon pressure regulators have successfully flown on commercial spacecraft using electric propulsion. In addition, active proportional flow controllers have flown on the Hall-thruster-equipped Tacsat-2, are flying on the ion thruster GOCE mission, and will fly next year on the Advanced EHF spacecraft.

This present paper briefly reviews the Dawn xenon feed system and those implemented on other xenon electric propulsion flight missions. A simplified feed system architecture is presented that is based on assembling flight-qualified components in a manner that will reduce non-recurring engineering associated with propulsion system architecture changes, and is compared to the NASA Dawn standard. The simplified feed system includes, compared to Dawn, passive high-pressure regulation, a reduced part count, reduced complexity due to cross-strapping, and reduced non-recurring engineering work required for feed system changes. A demonstration feed system was assembled using flight-like components and used to operate a laboratory NSTAR-class ion engine. Feed system components integrated into a single-string architecture successfully operated the engine over the entire NSTAR throttle range over a series of tests. Flow rates were very stable with variations of at most 0.2%, and transition times between throttle levels were typically 90 seconds or less with a maximum of 200 seconds, both significant improvements over the Dawn bang-bang feed system.

I. Introduction

Several tens of spacecraft have flown in the past few decades with xenon electric propulsion and a variety of feed systems. NASA has flown two of those missions. The type of feed system chosen for the Deep Space 1 (DS1) and Dawn missions was selected primarily for its low-risk approach, although there were undesirable features of this type of system that were either known or became apparent during development and application, including performance penalties and relatively high costs. Given the nature of cost-capped NASA mission development in today's environment, where reducing costs as much as possible while still providing high-reliability systems is

* Senior Engineer, Electric Propulsion Group.
† Senior Research Scientist, Propulsion and Materials Engineering Section.
© 2009 by the California Institute of Technology. Published by the Electric Rocket Propulsion Society with permission.

paramount, reconsideration of the Dawn-type approach is warranted. Often for NASA missions, propulsion system architecture is mission-specific which necessitates significant redesign and qualification (or re-qualification) costs. Infrequent missions may mean that parts are procured only a few times a decade, leading to increased vendor management costs and engineering costs associated with parts obsolescence issues, for example. Industrial approaches, which are very sensitive to cost and reliability, may avoid some of these issues and provide great benefits for NASA missions. A recent paper discussed the benefits of commercial electric propulsion systems in total;[1] this paper will focus on the feed system specifically. A review of the NASA flight feed system approach as well as brief reviews of most other xenon electric propulsion flight missions will be presented here, followed by an alternative, simplified feed system architecture which is expected to improve on performance and cost metrics compared to the Dawn approach.

NASA Xenon Electric Propulsion Spacecraft

Two NASA spacecraft have flown with xenon electric thrusters, the Deep Space 1 (DS1) technology mission which launched in 1998 and the Dawn science mission which was launched in 2007 and is presently en route to the asteroid belt. Both missions used the NSTAR ion thruster and same basic feed system control and delivery system. This "bang-bang" system was chosen because it was determined to be a low risk approach and it could provide the dynamic range of flow throttling required for the mission. There was also a reluctance at the time to use mechanical regulators because of experiences with helium regulators in chemical propulsion systems: high particle accumulation rates because of high helium flow rates; leakage due to the small atomic size of helium; materials incompatibility with chemical propellants; and re-design and re-qualification necessary for vastly different requirements on different missions. None of these issues are applicable, however, for presently available xenon regulators.

The NASA xenon feed system (XFS) employs a bang-bang regulation method to deliver xenon stored in a main storage tank at high pressure to two lower-pressure plenum tanks. Flow control devices (FCDs) are located downstream of the plenum tanks and deliver xenon flow rates that depend on the FCD temperatures and the pressures in the plena. Steady-state flow is achieved in this architecture by maintaining the plena pressure within an allowed band. The plena are operated in a constant blowdown mode, and when the pressure in a plenum reaches the minimum allowed value the "regulator" solenoid valve pair in the bang-bang system open and close to pass a high-pressure slug of xenon to the plenum and recharge it. This causes a sawtooth behavior in the plenum pressure and thus the flow rate delivered to the thruster which is characteristic of the system. One plenum tank is used for the main flow leg and a separate plenum tank used for the cathode and neutralizer legs.

The DS1 feed system was developed to provide xenon to a single thruster (see Refs. 2 and 3 for XFS schematics and details; the information presented below is taken from those). Because the main focus of the technology development mission was the ion engine itself, it was stipulated that the XFS employ a low-risk approach. The bang-bang system was selected to meet the mission requirements in this fashion. Three pressure transducers were located between each solenoid valve pair and plenum tank and a complicated voting scheme was used to determine the plena pressures based on those readings (in the event that one was an outlier its value was discarded). Including valves, plenum tanks, transducers, and FCDs the DS1 XFS contained 38 individual parts and was <u>not</u> single-fault tolerant.

The requirement for total flow uncertainty for the DS1 mission was ±3%,[2] which drove the system design. In the bang-bang system which operates in a blowdown mode, selection and knowledge of internal volumes is a critical part of the design. To maintain the required flow accuracy the sawtooth variation in the plena pressure was required to be less than 1%.[3] Important design parameters for the XFS included the regulator intersolenoid volume and the plenum tank volumes, which directly impacted such operational characteristics as the magnitude of the plena pressure sawtooth, the number of solenoid valve cycles, and the time required to change from one flow throttle condition to another. One of the biggest design issues for a bang-bang system is the high number of solenoid valve cycles required, typically on the order of a million cycles; valve wear-out is a major concern. Another critical engineering design parameter was the solenoid cycling times, which are functions of many parameters including supply pressure and temperature, solenoid temperature, and plenum tank pressure and temperature. As is evident, a significant amount of engineering design is required to implement the bang-bang system.

Flow uncertainty in the DS1 system was separated into random and systematic uncertainties. Random uncertainties, including uncertainties in the transducer output, calibration, and modeling, were determined to be about ±1.9% worst-case. Systematic uncertainty due to the sawtooth pressure variation was determined to be maximum of ±1% (pressure transducer drift was not included in the uncertainty analysis). Because these errors are additive, the total worst-case uncertainty was ±2.9%. In mission implementation, however, the actual error was less

than ±1.9% because the random errors were relatively small at the beginning of the mission where the sawtooth errors were relatively large, and vice-versa for near the end of mission.[2] Nonetheless, it can be seen that the characteristic sawtooth behavior of the bang-bang system can have a significant contribution to the total flow uncertainty. Flow uncertainty has a direct impact on the propellant budget; the Dawn mission booked on the order of 12 kg of propellant for this effect (i.e. 3% of the roughly 400 kg booked for thrusting operations).[4]

The sawtooth flow behavior combined with flight operations choices for DS1 caused higher-than-required xenon flow to the thruster. Design requirements for the XFS stipulated that xenon flow rates never go below their nominal set points in order to avoid in particular starving the cathodes which could have engine life implications. Thus, over the majority of the characteristic sawtooth profile, the XFS provided more xenon than necessary to operate at the required throttle level. An analysis of in-flight performance at Throttle Level 11 (TH11, 18.5 sccm main flow rate) showed that the time-averaged xenon flow rate was 0.75% higher than necessary.[2] On average, all three flow rates were on the order of 1% higher than the throttle table values.[5] This could, of course, be reduced to negligible if lower-than-nominal flows were permitted over portions of the sawtooth profile.

One consequence of the XFS design resulting from the use of plenum tanks was that long times were required to change from one flow condition to another, especially when throttling down. Constraints on valve cycle life and flow rate accuracy limited the throttling speed of the XFS from a few minutes to tens of minutes to, in some cases, several tens of minutes.[3] For example, analysis of DS1 in-flight data showed 18 minutes and 30 solenoid-pair cycles to transition the main flow up from TH6 to TH9 (11.3 sccm to 16.0 sccm); and 40 minutes to throttle down from TH12 to TH11 (20.0 sccm to 18.5 sccm). Additionally, during engine startup an operational choice was made to start both the discharge and neutralizer cathodes at their full-power flow conditions, then throttle down to the required mission throttle level. This led to throttle times of up to six hours, which was required to transition to the lowest-power operating point. Both the long throttling times and startup transients lead to unproductive xenon consumption (i.e. wasted propellant). The Dawn mission booked 1.9 kg of propellant alone for startup transients during thruster restarts.[4]

The basic XFS design for the Dawn spacecraft was nearly identical to that for DS1 with the main exception that the system was designed to deliver xenon flow to each of three NSTAR ion engines, although only a single thruster at a time, and was designed to be single-fault tolerant. A schematic of the Dawn feed system is shown in Fig. 1.[6] A significant number of parts were added to the XFS to meet Dawn mission requirements, including single-fault tolerance: latch valves between the high pressure transducer and the XCA plate (2 valves added to provide tank isolation), redundant pairs of solenoid bang-bang regulators (4 total valves added), redundant latch valves upstream of the FCDs (6 total valves added), latch valves on the low-pressure side of the bang-bang solenoid pairs (2 valves added to enable in-flight bakeout), and 15 additional temperature sensors (one for each pressure transducer and FCD).[6,7] A different type of FCD was also chosen for Dawn that was easier to calibrate and had better reproducibility. Including valves, plenum tanks, transducers, and FCDs the Dawn XFS contained 84 individual parts to service three engines, 46 more parts than DS1. To build the Dawn XFS from the DS1 XFS, 20 additional parts were required for the additional two engines with the balance required to meet single-fault tolerance and other mission requirements.

The Dawn system architecture combined with the XFS design also had increased complexity compared to the DS1 system. Dawn employs two DCIUs, one for each PPU, and each DCIU is required to control the XFS. Bang-bang regulation requires active monitoring and control of many components which adds significantly to the DCIU hardware and flight software complexity compared to a passive regulation method. The cross-strapping led to an arrangement where each DCIU was required to have direct control over a portion of the latch valves and indirect control over the remainder.[6] This architecture cross-strapping added even more complexity to the DCIU hardware and flight software, which together with other mission requirements added significantly to the ultimate cost of the Dawn flight system.

Non-NASA Xenon Electric Propulsion Spacecraft

A rich variety of flow systems have been developed for other xenon electric propulsion applications, with nearly all employing either mechanical regulators or bang-bang type systems for high pressure regulation. For flow control, the majority use a type of flow control device with a controlled upstream pressure.

<u>GOCE</u>

GOCE, launched in 2009, is an Earth gravity mapping mission utilizing QinetiQ T5 Kaufman ion thrusters for drag makeup. Flow management and control is provided by a Proportional Xenon Feed Assembly (PXFA) which relies on a mechanical pressure regulator to step high-pressure xenon stored in the tank to the desired service

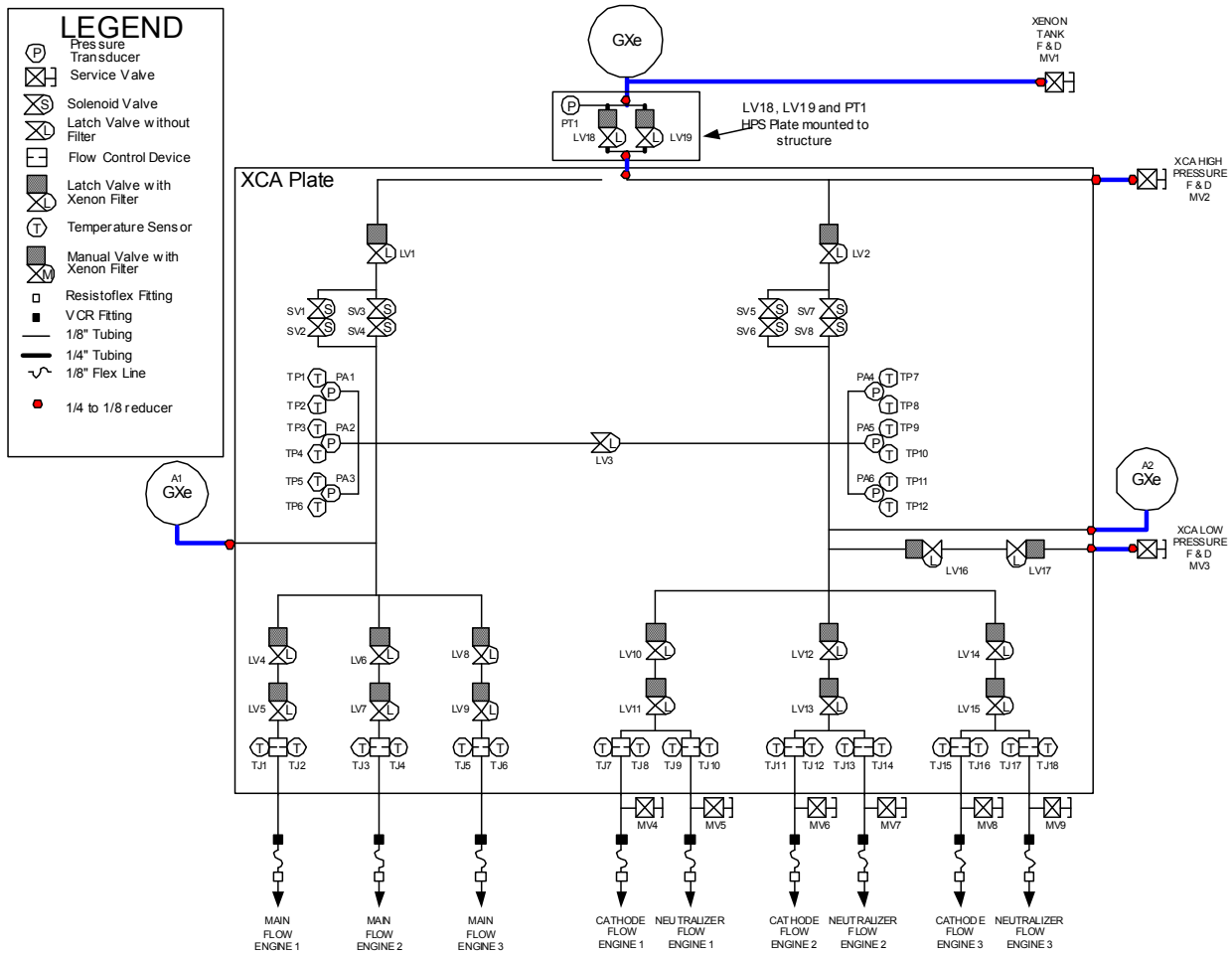

Fig. 1. Dawn Spacecraft Flight Xenon Feed System.

pressure.[8] The neutralizer and cathode flows are passively set by flow restrictors which are held at a fixed temperature by dedicated heaters. The main flow is controlled with an active Flow Control Valve employing a magneto-restrictive material, and is monitored using a specially-developed thermal Flow Sensor which has a range of 0 to 1 mg/sec. Closed-loop control is achieved with electronics housed in the subsystem power supply.

Hayabusa

The Hayabusa (formerly MUSES-C) asteroid sample return mission, developed and operated by ISAS, relies on 10-cm microwave ion engines for primary propulsion. A standard bang-bang system was developed for flow control, employing downstream flow restrictors to provide proper flow to the ion engines and neutralizers. Flow regulation with this system was expected to be within ±5% about the mean flow in a sawtooth profile,[9] and this was confirmed in flight.[10]

SMART-1

The ESA SMART-1 mission was the first use of a Hall thruster for primary propulsion beyond Earth orbit. High pressure management was performed with a bang-bang system similar to the DS1 design which provided in-flight pressure regulation of ±3%.[11] The PPS-1350 Hall thruster, derived from the successful SPT-100 engine, also uses a low-pressure flow controller implementing an active thermothrottle and a pair of flow restrictors to control flow to the anode and cathode legs of the engine.[12]

ETS-VI, COMETS, ETS-VIII

Three Earth-orbiting satellites built by JAXA have implemented ion thrusters for North-South Station Keeping applications. The Engineering Test Satellite VI (ETS-VI), launched in 1994, was the first flight of modern xenon ion thrusters. Regulation of xenon tank pressure was accomplished using a bang-bang system and the service pressure xenon was fed into a mass flow controller unit for each engine.[13] The mass flow controller actively measured the flow in each of the three flow legs (main, cathode, and neutralizer) using a thermal sensing element and actively controlled the flow using a thermally sensitive actuating valve.[14] Mass flow rate control was expected to be within ±5% of setpoint with this system. The COMETS satellite using the same subsystem design was launched in 1998. Neither satellite achieved its intended orbit, but the ion thrusters were successfully operated in orbit.[15] The feed system for ETS-VIII was significantly changed from these previous satellites, implementing a passive series-redundant mechanical regulator for pressure management and a series of flow restrictors to provide the proper flows to the main, cathode, and neutralizer legs.[16,17] Operation of the system has been nominal since the 2006 launch.

TacSat-2

The 200-W Hall thruster propulsion system that flew on the U.S. Air Force TacSat-2 spacecraft was unique in that neither a pressure regulator nor a bang-bang system was used for high-pressure regulation. Instead, a Moog Proportional Flow Control Valve (PFCV) was used for both high-pressure isolation and pressure regulation.[18] In this configuration, the signal from a pressure transducer downstream of the PFCV was fed back into a control circuit which adjusted the PFCV current to achieve the desired pressure. Regulated pressure downstream of the PFCV was split by flow orifices for the anode and cathode flow.[19]

STEX

The Russian D-55 TAL thruster flew in 1998 on the Naval Research Laboratory STEX spacecraft as a part of the Electric Propulsion Demonstration Module (EPDM).[20] A Moog 50E776 regulator was used to provide constant service pressure to anode and cathode leg flow restrictors in a temperature-controlled block adjacent to the thruster. Flow isolation was accomplished with valves upstream of the regulator, which was exposed to the vacuum of space in this configuration when the engine was not operating.[21]

ARTEMIS

The ARTEMIS spacecraft was unique in that the electric propulsion system consisted of two different types of ion thrusters, the RIT-10 and the UK-10, each with their own low-pressure flow control units. Xenon management at the top level occurred through a Propellant Storage and Distribution Assembly (PSDA), which used a bang-bang regulation system to provide xenon to each system. Low-pressure flow controllers for both the RIT-10 and the UK-10 implemented valve and plenum chamber combinations with flow restrictors.[22] Although the spacecraft was left in a low orbit by the launch vehicle, the EP system was successfully used for orbit-raising. During these activities the high-pressure regulating PSDA performed without issue for more than 6700 hours, although there was a failure one of the RIT flow controllers to provide xenon flow that was likely due to a failed-closed valve.[23]

Stentor, ASTRA-1K

The STENTOR satellite electric propulsion system, designed by Alcatel Space, employed both SPT-100 and PPS-1350 Hall thrusters. The ASTRA-1K satellite was derived from the STENTOR system but used only SPT-100s. Both spacecraft used mechanical pressure regulators for pressure management, fed into the standard SPT-type Xenon Flow Controller with an active thermothrottle and pair of flow orifices. Unfortunately, neither satellite reached its intended orbit due to launch vehicle failures.[24]

Communications Spacecraft Busses

Space Systems/Loral

Five spacecraft with SPT-100-based propulsion systems are now in service, the first of which launched in March 2004.[25] A Propellant Management Assembly (PMA) is implemented on these satellites to provide fluid isolation, propellant loading capability, and regulated service pressure to the flow controllers. A single-stage xenon regulator[26] in a parallel-redundant architecture[27] provides the high-pressure control. Mass flow control is achieved in the Xenon Flow Controller (XFC) using a thermothrottle and flow restrictors to achieve the proper split between cathode and anode flows.[28] The XFC is provided by the thruster vendor along with the thrusters.

Boeing Satellite Systems

Boeing Satellite Systems has flown a total of thirty spacecraft with XIPS ion engines; fifteen of the 13-cm XIPS on the 601 bus[29] and fifteen of the 25-cm XIPS on the 702 bus.[30] Xenon tank pressure in the XIPS subsystems is managed with a mechanical pressure regulator[26] and flow control is provided via flow restrictors.[31,32]

Astrium

Three Astrium-built satellites are in service with electric propulsion systems based on the STENTOR system.[33] These systems utilize the SPT-100 with its associated XFC using thermothrottle control with flow orifices; two of the spacecraft use a bang-bang type pressure regulation system[34] and the third uses mechanical pressure regulators.[35]

Russian Communications Satellites

Forty-two Russian communications satellites have implemented Hall thrusters for stationkeeping applications. The Kosmos and Loutch satellites, and the GALS and EXPRESS satellites, all manufactured by NPO PM, have implemented the SPT-70 and SPT-100 Hall thrusters, respectively. These spacecraft have used bang-bang type pressure regulation systems coupled with the SPT xenon flow controller consisting of thermothrottle and flow orifices.[36,37,38]

Summary of Feed System Architectures

It is interesting to compare xenon feed system designs for all flight missions reviewed here. For high-pressure regulation, 41 of the systems reviewed here relied on mechanical regulators with the bulk of those (35) coming from U.S. commercial satellite manufacturers. Bang-bang systems were employed on 51 flight systems (assuming that all 42 Russian flights were bang-bang; the information in the literature is not complete). Only the U.S. Air Force TacSat-2 relied on a different means of high-pressure regulation by using a Moog PFCV. Discarding the 80 commercial and 3 U.S. Government spacecraft, flight systems were evenly divided between bang-bang and mechanical regulator systems. For low-pressure flow control all systems used pressure-fed flow restrictors with the exception of the ETS-VI and COMETS spacecraft which employed thermal flow sensing and control, and the GOCE spacecraft which employs an active magneto-restrictive flow control valve for the main flow (the cathode flows use FCDs).

II. Simplified Feed System Description

In order to reduce costs for NASA science missions, JPL has developed a standard architecture for electric propulsion systems that addresses many of the cost drivers of those systems.[1] This architecture is valid for either Hall or ion thruster systems and can utilize either commercial components/units or NASA-specific components/units as necessary to meet mission objectives (i.e. cost, mass, performance, life, etc.). Cost-savings and reduced development schedule are realized with increased use of commercial components. This standard architecture utilizes a single-string redundant system which prevents fault propagation between strings, as opposed to the cross-strapping of engines and PPUs as used on Dawn. A key advantage of the single-string architecture is eliminating the separate DCIU box and instead incorporating the DCIU functions into a card contained within the PPU. This reduces the recurring costs of the power electronics and the programmatic costs associated with developing, managing, and qualifying/accepting a separate stand-alone DCIU. It also significantly reduces the non-recurring hardware and software development associated with redesigning for a system with a different number of engines.

Trade studies for feed system architecture were performed and resulted in the selection of an XFS architecture consisting of a common high-pressure regulation module combined with distributed low-pressure throttling modules.[1] With this system there is little-to-no non-recurring engineering work required for system design with a different number of engines, unlike, for example, the work required to adapt the DS1 XFS to the Dawn spacecraft with its two additional engines. Additional engines are accommodated in the standard architecture with the addition of only one low pressure throttling module for each engine. A single propellant management assembly (PMA) allows the distribution of propellant at low pressures, and it can be chosen for maximum compatibility with both Hall and ion thruster systems. Another advantage of this architecture over the bang-bang type is that it eliminates the necessary and costly non-recurring engineering work for other feed system changes such as implementing a larger dynamic flow throttling range, or changing the number of thrusters that operate at a single time.

Although a number of attractive and promising feed system technologies are under development or have been developed for use with xenon electric thrusters, flight-qualified components have received first consideration for

use. Integration of such components into a flight XFS is considered to be a low-cost and low-risk method for system development. Although specific components and suppliers are referenced herein as a part of the simplified feed system, alternative flight-qualified technology should absolutely be considered for NASA missions if it can provide benefits in performance, mass, cost, etc.

A schematic of the simplified XFS is shown in Fig. 2. A passive mechanical regulator was chosen for conversion of high-pressure supply gas to low-pressure distribution. This passive regulation approach uses a simple interface with the spacecraft electronics and does not require development of additional hardware and/or software required for active control devices, such as the architecture used on TacSat-2.[18] A key benefit of this approach is that it eliminates the solenoid valve wear-out issue which is a critical concern for bang-bang systems. A Moog unit was chosen for the initial XFS design based on flight heritage and ease of integration with other SEP hardware, although other flight-qualified regulators are available. U.S. commercial programs have had over a decade of success with Moog xenon regulators. Use of active-product-line components such as this contributes greatly to system cost savings and reduced schedule risk.

The PMA, consisting of parallel redundant regulator/isolation-latch-valve legs with additional fill drain valves and pressure transducers, provides propellant isolation and pressure regulation. Since its first development,[27] the PMA has been qualified to higher inlet pressures and higher flow rates. The inlet pressure range is 100 to 2700 psi, and over a flow rate range of 4 to 60 mg/s the regulated outlet pressure is 35.5 to 38.5 psi. All of the PMA electrical interfaces are with the spacecraft computer.

The main feature of the low-pressure flow throttling module, and another departure from the Dawn architecture, is the use of an active flow control device to control the pressure upstream of an FCD. For the initial design of the simplified XFS, the Moog Proportional Flow Control Flow Valve (PFCV) was chosen. The PFCV has flown on the TacSat-2 mission,[18] has been flight qualified for Earth-orbiting military spacecraft as a part of the BPT-4000 Hall thruster system,[39] scheduled for first launch in 2010, and has been successfully subjected to an environmental test program representative of NASA science missions under the NEXT development project.[40] One PFCV and a single

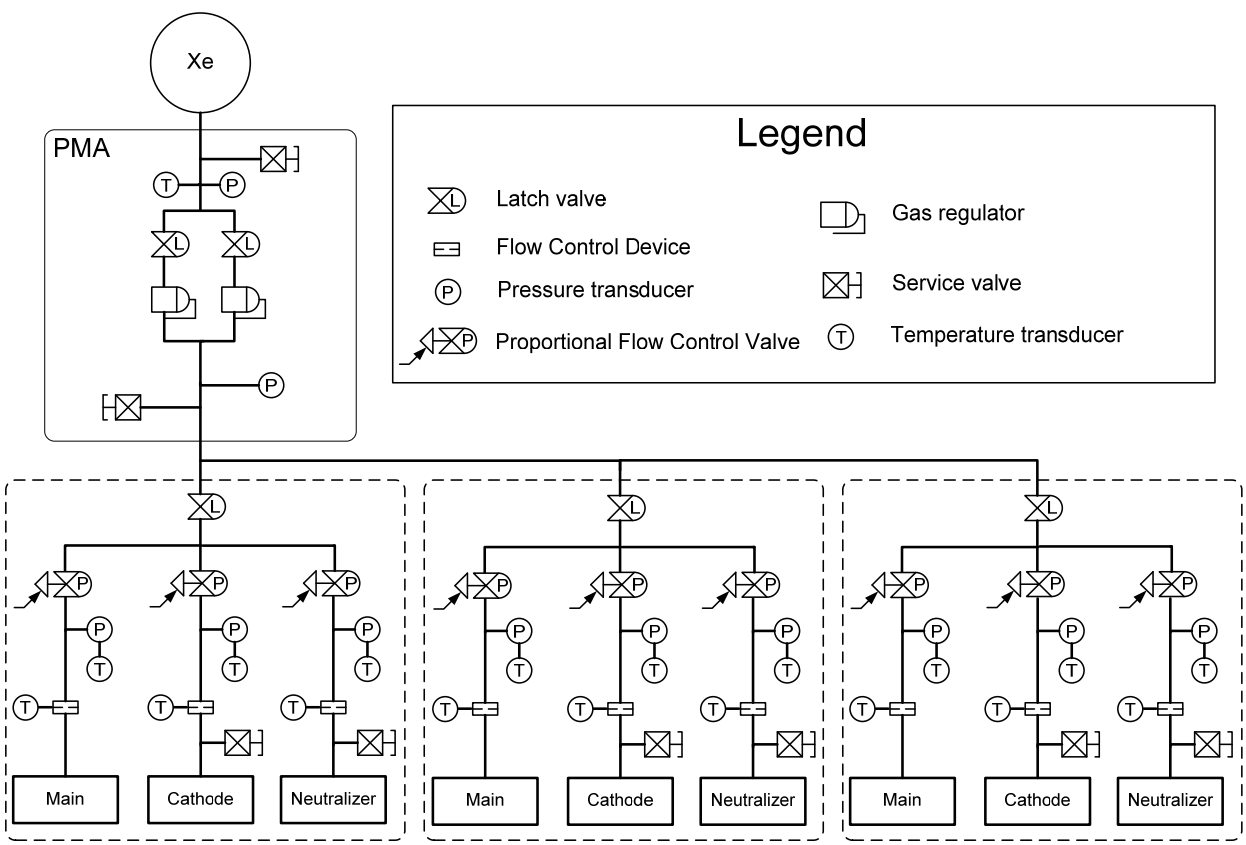

Fig. 2. Schematic of Simplified Flight XFS for NASA Science Missions (three-string system depicted).

pressure transducer are utilized for each of the three legs of the low-pressure assembly. The chosen FCDs, Lee Viscojets, are the same as those implemented on the Dawn XFS. A decided advantage of this approach is that it allows for simple, regular zero checking of the pressure transducers – including every time a thruster string is not functional since they are directly exposed to space (although this is also possible with the Dawn architecture, it requires opening latch valves during non-operational periods and some amount of time to evacuate the plenum tanks for a zero check). Since pressure transducers are more likely to have zero drift than gain change, there is a possibility of decreasing the flow uncertainty and propellant load in this configuration.

There are two notable differences with regard to fault protection of this low-pressure assembly compared to the Dawn XFS architecture. First, the design relies on the PFCVs to provide positive shut-off capability for single-fault tolerance, as opposed to the series latch valves in the Dawn system. Second, it uses only a single pressure transducer in each flow leg to sense the pressure upstream of the FCD. A pressure transducer failure in this architecture would fail an entire thruster string, although this possibility is accounted for with a redundant thruster string, and it is noted that pressure transducer failure is less likely than, for example, PPU or thruster failure.

The simplified feed system provides for individual flow control of the cathode and neutralizer legs, whereas the DS1 and Dawn systems gang the two legs together under a single control. This arrangement has some performance advantages although there is an associated increase in mass, parts count, and complexity. A ganged system could also be implemented in the simplified feed system.

The total parts count for the three-string XFS shown in Fig. 2 is 63, a significant savings over the 84 parts for the Dawn XFS. If the Dawn XFS provided for individual control of the cathode and neutralizer legs as does the simplified system, the parts count would be 108, over 40% more parts than the simplified system shown in Fig. 2. Reduced part count is expected to reduce costs not so much through procurement costs but through reduced engineering and management labor costs.

The design of the simplified XFS improves over the Dawn XFS in several areas that will contribute to reduced costs: reduced part count, reduced complexity due to cross-strapping, reduced non-recurring engineering required for feed system changes, and passive high-pressure regulation. It will be shown in the next section that the simplified XFS will also have decided performance advantages over the Dawn XFS.

III. Simplified Feed System Testing

Critical components of the simplified feed system were obtained for a demonstration test performed with a laboratory ion thruster. A single-string feed system was assembled using a mechanical regulator and the PFCVs, pressure transducers, and FCDs necessary for a low-pressure assembly. The goals of the tests were to demonstrate operation over a representative throttle table and to characterize system operation including flow stability and throttling performance.

A. Test Articles and Equipment

1. Propellant Feed System

Components of the simplified feed system were first integrated into an existing laboratory feed system for proof-of-concept and demonstration testing. A basic schematic of the configuration is shown in Fig. 3. High-pressure xenon from a laboratory bottle was fed directly into a flight-like Moog two-stage gas regulator; flight-like Taber pressure transducers on either side of the regulator monitored the supply and output pressures. From there, three propellant lines branched for the main, neutralizer, and

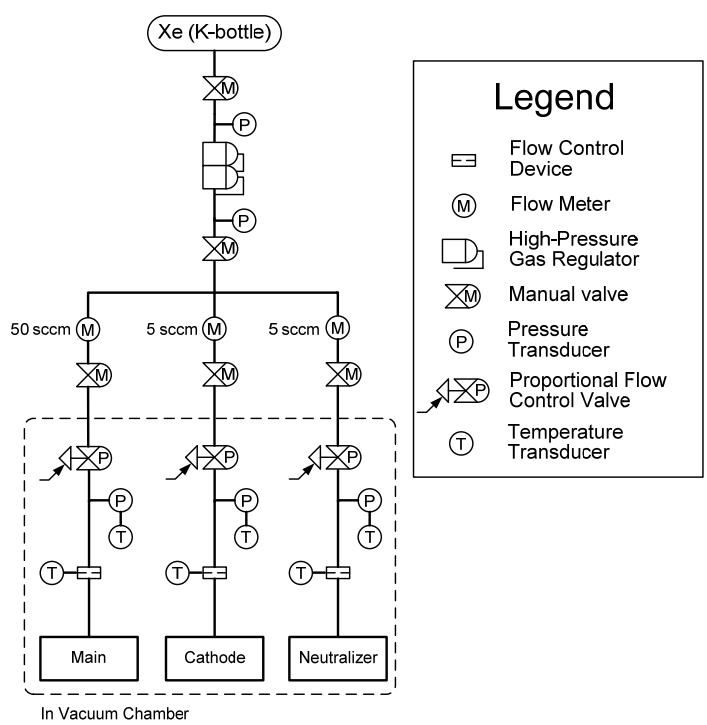

Fig. 3. Flow Schematic for Testing with Flight-Like Regulator.

cathode flows, each with a laboratory flow meter in-line close to the branch point. The low-pressure side of the feed system was located inside the vacuum chamber near the ion engine. There was approximately eleven meters of 0.6-cm-dia. tubing between the flow branch point and the low-pressure PFCVs, a length necessary to accommodate use of the laboratory flow meters for flow monitoring and FCD calibration. The flow meters were calibrated prior to feed system testing.

Each leg of the low-pressure side of the feed system consisted of a Moog 51E399 PFCV, a Taber 3911 pressure transducer with integral temperature sensor (50 psia range), Lee viscojet, and a PRT temperature sensor affixed to the viscojet. All components were connected with fittings (i.e. not welded) which created a larger internal volume than would exist in a flight build. There was approximately one meter of 0.3-cm-dia. tubing between the viscojets and the ion engine.

The viscojets in this test setup were sized for a 40-psia feed pressure and the NSTAR engine throttle range. Since the loaned Moog pressure regulator output was only 20 psia nominal, only the lower end of the throttle range could be tested in this configuration. Hence, testing was also performed with a laboratory pressure regulator set to 40 psia output. This second series of tests was performed with a more compact propellant routing arrangement, shown in Fig. 4. The flow meters and long propellant tubing lengths between the branching point and the PFCVs were eliminated in this configuration. Here there was approximately four meters of tubing between the regulator and the branch location and one meter of tubing between the branch location and the PFCVs.

2. Test Facility and Equipment

Testing was performed in the JPL Patio Chamber facility. The vacuum chamber is 3 m in diameter and 8.6 m long, with ten cyropumps installed although only six were necessary and in use for this testing. With the vacuum chamber configuration used for this test the effective pumping speed was approximately 90,000 L/s on xenon. To minimize facility backsputter rates the interior of the vacuum facility is lined with graphite panels.

The thruster used for the testing described herein was the NSTAR-class laboratory model NKO2 thruster. NKO2 is nearly identical in size and shape to the NSTAR thruster and is functionally equivalent.[41] A set of conventional NSTAR-class molybdenum ion optics were used. Engine power was supplied by conventional laboratory power supplies.

The power system, flow system, and facility telemetry were controlled and monitored with a Labview-based data acquisition and control system. Flow control was performed with a simple software-based control loop to maintain constant pressure between each PFCV and viscojet. Dedicated current sources were provided for each PFCV which were controlled via the 12-bit analog output of the data system and a simple voltage divider circuit used to improve system resolution. The software control was primarily proportional with some derivative control added to limit overshooting. This control system was by no means representative of what would be used in a flight implementation; it was assembled for feed system demonstration testing only. Fine-tuning of this laboratory control system was accomplished over a series of thruster tests and continually refined, thus some of the data presented here do not exhibit optimum transitions between throttle levels (i.e. there are some flow overshoot and longer throttling times observed, especially among some of the earlier data collected).

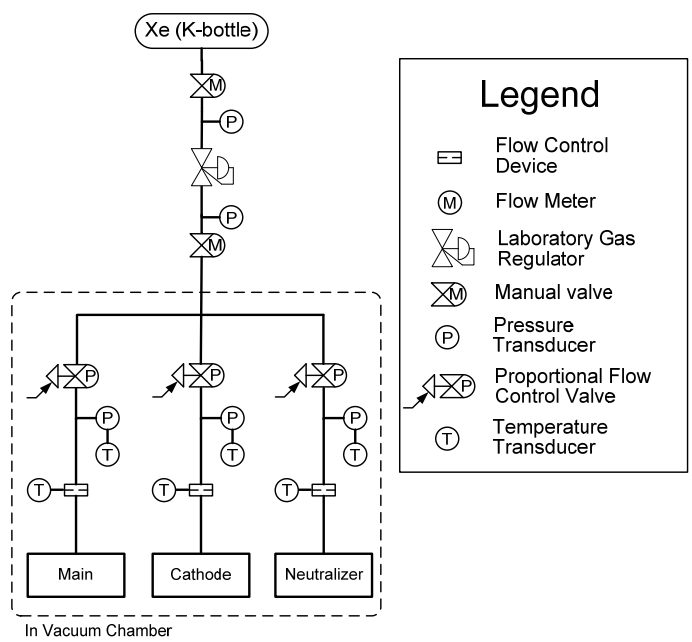

Fig. 4. Flow Schematic for Testing with Laboratory Regulator.

B. Test Methods

Calibration of the FCDs in the low-pressure assembly was performed in the configuration of Fig. 3 using the in-line mass flow meters. The branch pressure in each of the three flow legs was held constant and the flow meter

output was recorded when the system had reached steady state. The flow dependence on temperature was ignored in this calibration; viscojet temperatures were in the range of 15-22 ºC for this testing and the flow rates have been shown to have only a weak dependence on temperature for this type of FCD.[42] As expected for the viscojet, the system exhibited a linear dependence of flow rate on branch pressure. Data from the main flow branch calibration are shown in Fig. 5. Cathode and neutralizer flows were similarly linear with branch pressure.

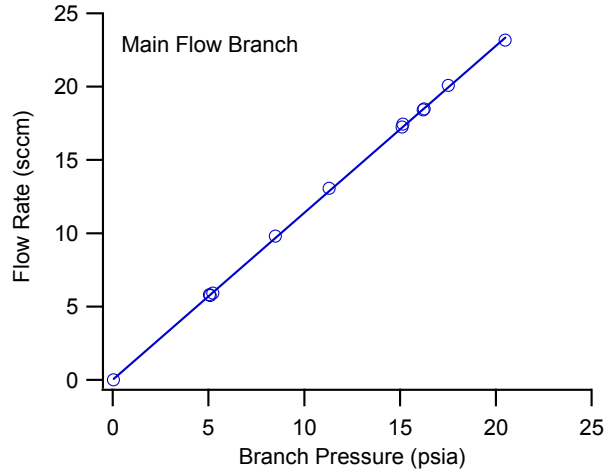

Fig. 5. Main Flow Branch Calibration Data.

Engine testing was performed over the range of the NSTAR throttle table,[43] shown in Table 1. Note that the minimum total flow rate is the TH2 set point. Flow system calibration data were used to construct a pressure lookup table to match the NSTAR flow rates. Other than flow rate control, the NKO2 engine was controlled and operated using typical ion thruster laboratory procedures. Flow rates were changed simultaneously during throttling testing. Unfortunately, the ion optics used for this testing did not permit operation at the full beam current for throttle levels TH13 and TH15. Although the flow rates for those throttle levels were set at the nominal values for NSTAR, the engine was operated at 5 and 10% less beam current, respectively. This did not affect flow system operation or results.

C. Flight-Like Regulator Test

Thruster testing was first performed with the Moog flight-like two-stage pressure regulator (i.e. the schematic of Fig. 3). Although initial testing with a single leg of the low-pressure feed system led to an acceptable rough-tuning of the PFCV control system, additional tuning was required as thruster testing was initiated, especially when

Table 1. NSTAR Throttle Table.[43]

Throttle Level	Beam Voltage (V)	Beam Current (A)	Main Flow Rate (sccm)	Cathode Flow Rate (sccm)	Neutralizer Flow Rate (sccm)
15	1100	1.76	23.43	3.70	3.59
14	1100	1.67	22.19	3.35	3.25
13	1100	1.58	20.95	3.06	2.97
12	1100	1.49	19.86	2.89	2.80
11	1100	1.40	18.51	2.72	2.64
10	1100	1.30	17.22	2.56	2.48
9	1100	1.20	15.98	2.47	2.39
8	1100	1.10	14.41	2.47	2.39
7	1100	1.00	12.90	2.47	2.39
6	1100	0.91	11.33	2.47	2.39
5	1100	0.81	9.82	2.47	2.39
4	1100	0.71	8.30	2.47	2.39
3	1100	0.61	6.85	2.47	2.39
2	1100	0.52	5.77	2.47	2.39
1	850	0.53	5.82	2.47	2.39
0	650	0.51	5.98	2.47	2.39

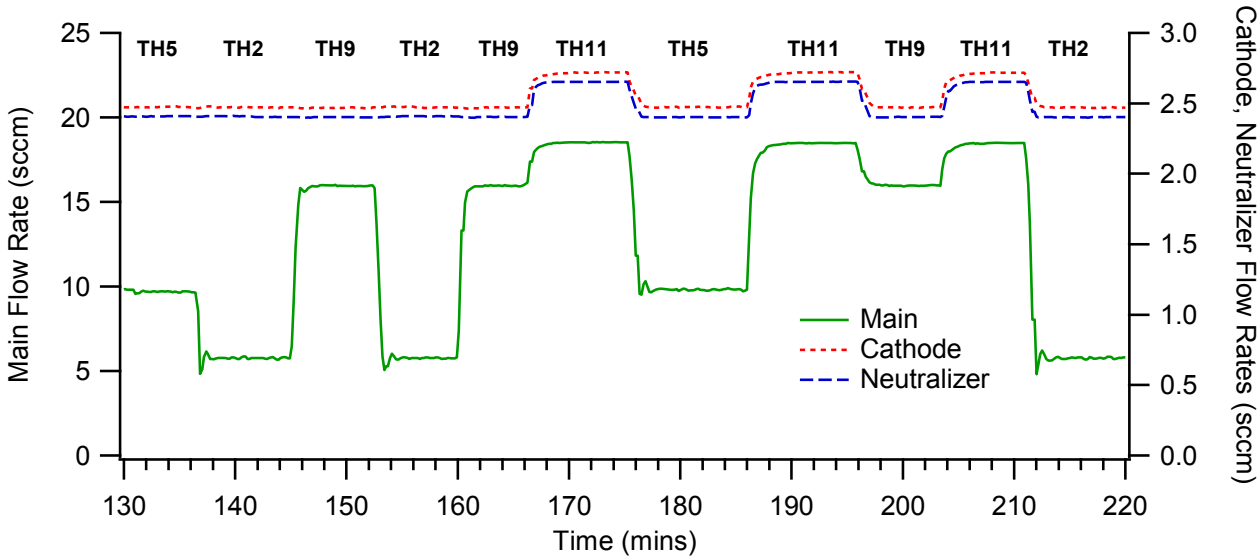

Fig. 6. Throttling Test with Flight-Like Regulator and Non-Optimized Laboratory Control System.

switching between regulators. In this configuration this was complicated by the long lengths of tubing necessary for use of the laboratory flow meters.

A series of throttling tests was performed covering the full range of throttle levels possible with this setup. (Recall that the 20-psia output of the flight-like regulator coupled with the viscojet sizing did not permit operation at the highest flows. This could be easily corrected by reducing the flow restriction of the FCDs, but unfortunately properly sized FCDs were not available for this testing). Typical test data are shown in Fig. 6 for a series of ten throttle level changes over a period of 90 minutes. The cathode flows are not exercised much over this range of the throttle table but the main flow shows good response to deep throttling as well as smaller changes in flow rates. Some overshoot is visible in the flow as a result of the non-optimized PFCV control system. The time required to throttle from one level to another, for both flow increases and decreases, was a few minutes at most instead of the tens of minutes observed in the Dawn-type bang-bang XFS. The main flow as calculated using the branch pressure data and FCD calibration tracked the measured meter flow data excellently as shown in Fig. 7.

One concern regarding the use of three active flow control devices in a parallel architecture such as that used in this low-pressure assembly is the possibility of cross-talk between the valves, i.e. instabilities or fluctuations in one of the legs causing fluctuations in the other legs. A preliminary investigation of these effects was performed by inducing a large instability in the main branch pressure and examining the effects on the cathode and neutralizer pressures. As shown in Fig. 8, there is no noticeable effect on the cathode and neutralizer flow stability due to the large main instability. Although these results are promising, additional investigations are warranted in a

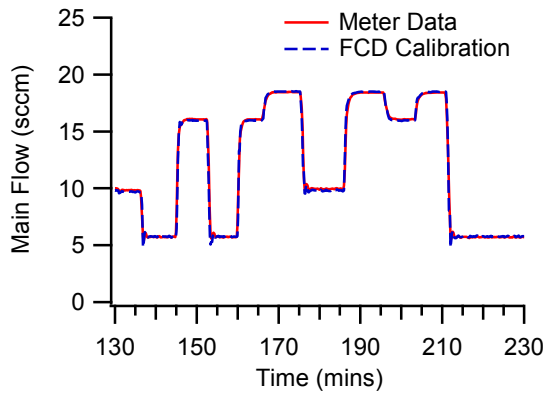

Fig. 7. Comparison of Main Flow Meter Data with Flow Calculated using Branch Pressure and FCD Calibration.

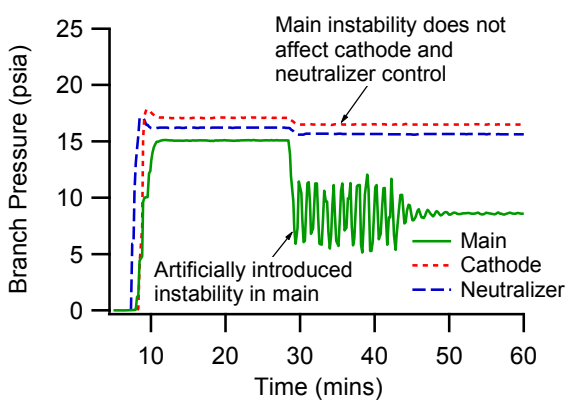

Fig. 8. Effect of Artificially Induced Main Instability on Cathode and Neutralizer Flow Control.

flight-like configuration with flight-like control software.

Thruster testing with the integrated flight-like regulator and low-pressure assembly was determined to be successful over a large range of the NSTAR throttle table.

D. Laboratory Regulator Test

Thruster testing was next performed with the laboratory regulator set to an output pressure of 40 psia, the design point for full NSTAR throttle table coverage with the FCDs installed in the low-pressure assembly. In this configuration the feed system tubing lengths were shortened as much as possible by bypassing the laboratory flow system including the flow meters. The pressure transducer outputs combined with the FCD calibrations were used for flow control and monitoring based on the success of the earlier testing, especially the data shown in Fig. 7. The results of the full throttling test are shown in Fig. 9. Here the laboratory PFCV control system has been further optimized, although a small amount of overshoot is still visible in the neutralizer flow (again, this is correctable with a flight control system). Flow rates were determined from the measured branch pressures and the FCD calibrations. The low-pressure assembly performed exactly as expected for this test, with no issues with flow stability, deep throttling, or fine control.

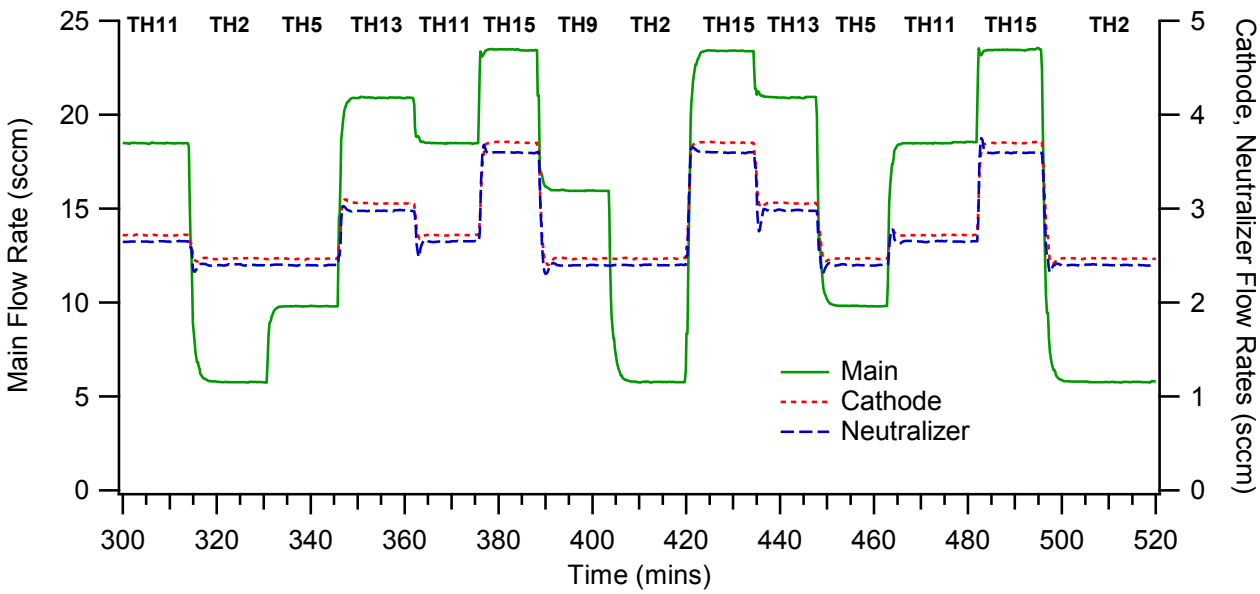

Fig. 9. Throttling Test with Laboratory Regulator and Fine-Tuned Laboratory Control System.

A small subset of the throttling test data are shown in Fig. 10. Flow stability, as characterized by standard deviation of calculated flow rate divided by average flow rate, was excellent. Fluctuations were typically 0.1% with a maximum of less than 0.2% (the controller deadband was set to 0.25%). For the data shown in Fig. 10, the most stable flow was the TH15 neutralizer flow at 0.05% fluctuations; the TH11 neutralizer flow and the TH2 main flow had the highest fluctuations at 0.17% of average flow each. For all TH11 flows shown in Fig. 9 the main flow fluctuations were 0.07%. Compare this to the DS1 feed system performance where TH11 flows varied due to the characteristic bang-bang sawtooth profile from the setpoint of 18.51 sccm to 18.8 sccm, a difference of 1.6%.[2] The simplified feed system demonstrates a marked improvement over the bang-bang XFS in terms of flow stability. Note, however, that total flow uncertainty will also include uncertainties due to transducer output uncertainties and calibration errors and thus will be larger than the flow fluctuations shown here. Nonetheless, some propellant savings due to decreased flow uncertainty

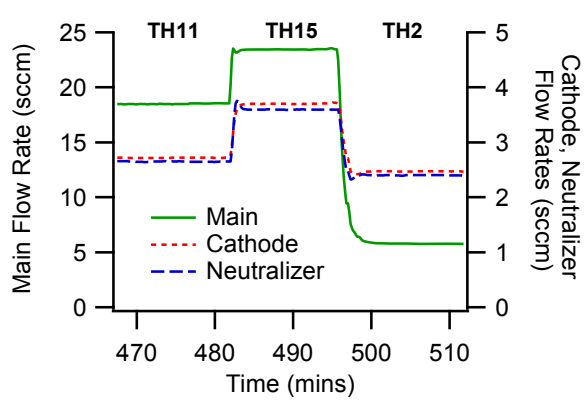

Fig. 10. Laboratory Regulator Throttling Test (Enlarged Portion).

compared to the 12 kg booked for Dawn may be expected with the simplified system.

The time required for throttling between levels was also excellent. Throttle time is defined here as the time required to move from the last flow rate set point to the time where the flow is always less than 5% from the new set point (it thus includes the effects of overshoot). The data acquisition system recorded data points only every several seconds so the times given here are only precise within that amount. Transition times for the cathode and neutralizer flows were typically between 60 and 90 seconds. Larger times were required for main flow transitions because of the larger flow rate range and especially the time required for the volume between the PFCV and FCD to blowdown during transitions from full flow to minimum flow. For example, the largest transition time is the 200 seconds observed in Fig. 10 for the throttle from TH15 to TH2. For this same transition the cathode and neutralizer required 105 and 63 seconds, respectively, to settle at the new flow. For the throttle up from TH11 to TH15 in the figure all flows had settled at TH15 within 51 seconds. This is a significant improvement over the minutes to tens of minutes required for throttling the bang-bang DS1 and Dawn systems.

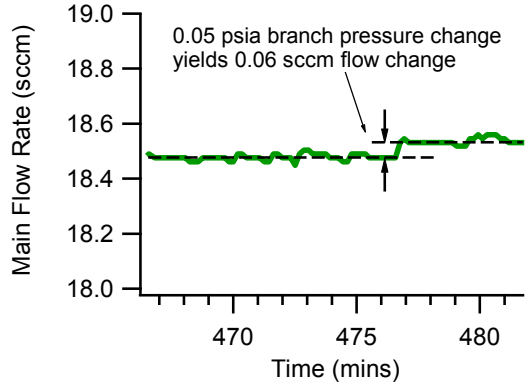

Fig. 11. Fine Throttling Control Demonstration.

The calculated flows shown in Fig. 9 were all very close to the commanded set points. Averaged measured branch pressures were typically within 0.1% of the commanded set point with a maximum difference of 0.21% (recall that flow rate is directly proportional to branch pressure). While this is largely a function of the control system, it also demonstrates that the low pressure assembly is capable of fine flow control. A direct example of this is shown in Fig. 11 where the main flow was slightly adjusted at TH11. The branch pressure was increased by 0.05 psia which resulted in a flow increase of 0.06 sccm. This is about the minimum level of fine control required for the NSTAR throttle table (the main flow increment from TH2 to TH1 is 0.05 sccm and the cathode and neutralizer increments from TH9 to TH10 are 0.09 sccm). Finer control could be accomplished with a flight-like pressure control system. Note that this fine pressure control is also less than the total error band specification on the transducer; a full error analysis on the flow system is required.

IV. Conclusion

NASA has flown two missions with xenon electric propulsion, at the rate of about one flight per decade. Both the DS1 and Dawn spacecraft utilized bang-bang feed systems to provide xenon flow to NSTAR ion thrusters. Although these flow systems have proven to be highly successful, they are complex with many components and their performance, while adequate for those missions, leaves room for improvement in mission efficiency. Recent development and flight work at non-NASA organizations has led to flight-qualified flow components that can be implemented on NASA missions with an expectation of significantly reduced costs and with performance benefits. A simplified feed system consisting of a mechanical regulator for high-pressure regulation and distributed low pressure assemblies using active flow control components has been designed to capture these benefits. The system uses flight-qualified and proven components, with significantly fewer parts than the Dawn feed system, which can be integrated for a number of different architectures at lower cost compared to the Dawn XFS. The simplified feed system features a reduced part count, reduced complexity due to cross-strapping, reduced non-recurring engineering required for feed system changes, and passive high-pressure regulation. Cost savings for the simplified feed system are expected to result from reduced engineering and management costs associated with feed system changes for different missions and applications, the single-string architecture, reduced parts count, and the use of available flight-qualified commercial hardware. Direct propellant savings for the simplified feed system compared to Dawn are achieved with the elimination of xenon losses due to thruster restarts (1.9 kg), xenon losses during throttling changes (the amount depends on the mission profile), and likely reductions in the propellant margin booked for the 3% flow uncertainty (~12 kg booked on Dawn).

A set of flight-like components of the simplified feed system was assembled for laboratory testing with a NSTAR-class engine and the performance of the feed system was excellent with a simple laboratory control system. Over a series of tests the engine was operated over the entire range of the NSTAR throttle table with excellent flow

stability (better than 0.2% for all conditions, compared to ~1% for Dawn) and throttling times (typically less than 90 seconds with a maximum of 200 seconds, compared to tens of minutes or more for Dawn). Initial investigations showed no cross-talk between the PFCVs when large instabilities were artificially induced, and fine control was demonstrated at the level required for NSTAR throttling. A flight-like control system and flight-like packaging for the low-pressure assembly will doubtless improve on this performance. The simplified feed system appears to address many of the major issues with the bang-bang type feed system used on DS1 and Dawn, especially cost, while at the same time improving performance.

Acknowledgments

The work described in this paper was carried out by the Jet Propulsion Laboratory, California Institute of Technology, under a contract with the National Aeronautics and Space Administration. Funding was provided by the In-Space Propulsion Technology program. Special thanks to Paul King and David Pehrson of Moog for loan of the flight-like regulator and PFCVs that were used in this testing. The guidance and support of feed system expert Gani Ganapathi at JPL was crucial throughout the trade studies, design, and testing that formed this work and is gratefully acknowledged. Thanks also to John Brophy for sharing his intimate knowledge of the Dawn ion propulsion system, and Ray Swindlehurst and Allison Owens who were instrumental in setup and operation of the testing described herein.

References

[1] T.M. Randolph, "Qualification of Commercial Electric Propulsion Systems for Deep Space Missions," IEPC 2007-271, 30th International Electric Propulsion Conference, Florence, Italy, Sept. 2007.

[2] G.B. Ganapathi and C.S. Engelbrecht, "Performance of the Xenon Feed System on Deep Space One," Journal of Spacecraft and Rockets, Vol. 37, No. 3, May-June 2000, pps. 392-398.

[3] E.D. Bushway III, C.S. Engelbrecht, and G.B. Ganapathi, "NSTAR Ion Engine Feed System: Introduction to System Design and Developmnt," IEPC 97-044, 25th International Electric Propulsion Conference, Cleveland, OH, August 1997.

[4] C.E. Garner, M.D. Rayman, and J.R. Brophy, "In-Flight Operation of the Dawn Ion Propulsion System Through Start of the Vesta Cruise Phase," AIAA 2009-5091, 45th Joint Propulsion Conference, Denver, CO, Aug. 2009.

[5] M.G. Marcucci and J.E. Polk, "NSTAR Xenon Ion Thruster on Deep Space 1: Ground and flight tests," Review of Scientific Instruments, Vol. 71, No. 3, March 2000, pps. 1389-1400.

[6] J.R. Brophy, G.B. Ganapathi, C.E. Garner, J. Gates, J. Lo, M.G. Marcucci, and B. Nakaznon, "Status of the Dawn Ion Propulsion System," AIAA 2004-3433, 40th Joint Propulsion Conference, Fort Lauderdale, FL, July 2004.

[7] J.R. Brophy, M.G. Marcucci, G.B. Ganapathi, C.E. Garner, M.D. Henry, B. Nakaznon, and D. Noon, "The Ion Propulsion System For Dawn," AIAA 2003-4542, 39th Joint Propulsion Conference, Huntsville, AL, July 2003.

[8] M.C.A.M. van der List, P.A.G. van Put, V. Yüce, and J. Kuiper, "Next Generation Electrical Propulsion Feed Systems and Spin-Off Micro-Propulsion Components," AIAA 2006-4848, 42nd Joint Propulsion Conference, Sacramento, CA, July 2006.

[9] K. Toki, H. Kuninaka, K. Nishiyama, and Y. Shimizu, "Flight Readiness of the Microwave Ion Engine System for MUSES-C Mission," IEPC 2003-098, 28th International Electric Propulsion Conference, Toulouse, France, March 2003.

[10] H. Kuninaka, K. Nishiyama, I. Funaki, T. Yamada, Y. Shimizu, and J. Kawaguchi, "Powered Flight of Electron Cyclotron Resonance Ion Engines on Hayabusa Explorer," Journal of Propulsion and Power, Vol. 23, No. 3, May-June 2007, pps. 544-551.

[11] C.R. Koppel, F. Marchandise, and D. Estublier, "Robust Pressure Regulation System for the SMART-1 Electric Propulsion Sub-System," AIAA 2004-3977, 40th Joint Propulsion Conference, Fort Lauderdale, FL, July 2004.

[12] C.R. Koppel, F. Marchandise, D. Estublier, and L. Jolivet, "The SMART-1 Electric Propulsion Subsystem In Flight Experience," AIAA 2004-3435, 40th Joint Propulsion Conference, Fort Lauderdale, FL, July 2004.

[13] S. Shimada, K. Satoh, Y. Gotoh, E. Nishida, H. Takegahara, K. Nakamaru, H. Nagano, and K. Terada, "Ion Engine System Development of ETS-VI," IEPC 91-145, 22nd International Electric Propulsion Conference, Viareggio, Italy, Oct. 1991.

[14] S. Shimada, Y. Gotoh, H. Takegahara, and H. Nagano, "Mass Flow Controller of Ion Engine System," IEPC 91-109, 22nd International Electric Propulsion Conference, Viareggio, Italy, Oct. 1991.
[15] T. Ozaki, Y. Kasai, T. Nakagawa, T. Itoh, K. Kajiwara, and M. Ikeda, "In Orbit Operation of 20 mN Class Xenon Ion Engine for ETS-VIII," IEPC 2007-084, 30th International Electric Propulsion Conference, Florence, Italy, Sept. 2007.
[16] E. Nishida, T. Ozaki, Y. Kasai, Y. Gotoh, M. Ikeda, and K. Kajiwara, "Development of Xenon Ion Engine Subsystem for ETS-VIII," IEPC 99-053, 26th International Electric Propulsion Conference, Kitakyushu, Japan, October 1999.
[17] K. Dyer, A. Dien, E. Nishida, Y. Kasai, M. Ikeda, and K. Kajiwara, "A Xenon Propellant Management Sub-Unit for Ion Propulsion," IEPC 99-143, 26th International Electric Propulsion Conference, Kitakyushu, Japan, October 1999.
[18] J.K. Barbarits and P.T. King, "Xenon Feed System Progress," AIAA 2006-4846, 42nd Joint Propulsion Conference, Sacramento, CA, July 2006.
[19] D.R. Bromaghim, J.T. Singleton, R. Gorecki, F.D. Tan, H. Choy, B. Pote, L. Byrne, B. Connolly, V. Hruby, and J. Barbarits, "200 W Hall Thruster Propulsion Subsystem Development for MicroSatellite Missions," Proceedings of the 53rd JANNAF Propulsion Meeting, Monterey, CA, Dec. 5-8, 2005.
[20] P.R. Lynn, Jr., M.F. Osborn II, J.M. Sankofic, and L.H. Caveny, "Electric Propulsion Demonstration Module (EPDM) Flight Hall Thruster System," IEPC 97-100, 25th International Electric Propulsion Conference, Cleveland, OH, August 1997.
[21] M.F. Osborn II, P.R. Lynn, Jr., and R.L. Sutton, "RHETT/EPDM Flight Xenon Flow System Development," IEPC 97-105, 25th International Electric Propulsion Conference, Cleveland, OH, August 1997.
[22] H. Renault, M. Silvi, K. Bohnhoff, and H. Gray, "Electric Propulsion on ARTEMIS: A Development Status," *Proceedings of the Second European Spacecraft Propulsion Conference*, ed. M. Perry, Noordwijk, the Netherlands, May 1997, pps. 115-123.
[23] R. Killinger, R. Kukies, M. Surauer, G. Saccoccia, and H. Gray, "Final Report on the ARTEMIS Salvage Mission using Electric Propulsion," AIAA 2003-4546, 39th Joint Propulsion Conference, Huntsville, AL, July 2003.
[24] P. Garnero, "ASTRA 1k and STENTOR Plasma Propulsion Subsystem Experience," AIAA 2003-4547, 39th Joint Propulsion Conference, Huntsville, AL, July 2003.
[25] D.J. Pidgeon, R.L. Corey, B. Sauer, and M.L Day, "Two Years On-Orbit Performance of SPT-100 Electric Propulsion," AIAA 2006-5353, 24th AIAA International Communications Satellite Systems Conference (ICSSC), San Diego, CA, June 2006.
[26] J.K. Barbarits, "Xenon Pressure Regulator," AIAA 98-3493, 34th Joint Propulsion Conference, Cleveland, OH, July 1998.
[27] E.D. Bushway III and W. Rogers, "Miniature Lightweight Propellant Management Assembly for Stationary Plasma Thrusters," AIAA 97-2788, 33rd Joint Propulsion Conference, Seattle, WA, July 1997.
[28] M. Day, N. Maslennikov, T. Randolph, and W. Rogers, "SPT-100 Subsystem Qualification Status," AIAA 96-2713, 32nd Joint Propulsion Conference, Lake Buena Vista, FL, July 1996.
[29] K. Chien, S.L. Hart, W.G. Tighe, M.K. De Pano, T.A. Bond, and R. Spears, "L-3 Communications EIT Electric Propulsion Overview," IEPC 2005-315, 29th International Electric Propulsion Conference, Princeton, NJ, Nov. 2005.
[30] D.M. Goebel, J.E. Polk, R.E. Wirz, J.S. Snyder, I.G. Mikellides, I. Katz, and J. Anderson, "Qualification of Commercial XIPS Ion Thrusters for NASA Deep Space Missions," AIAA 2008-4914, 44th Joint Propulsion Conference, Hartford, CT, July 2008.
[31] J.R. Beattie and J.N. Matossian, "Xenon ion sources for space applications," Review of Scientific Instruments, Vol. 61, No. 1, Jan. 1990, pps. 348-353.
[32] J.R. Beattie, J.D. Williams, and R.R. Robson, "Flight Qualification of an 18-mN Xenon Ion Thruster," IEPC 93-106, 23rd International Electric Propulsion Conference, Seattle, WA, Sept. 1993.
[33] F. Darnon, D. Arrat, S. d'Escrivan, E. Chesta, and N. Pillet, "An Overview of Electric Propulsion Activities in France," AIAA 2007-5165, 43rd Joint Propulsion Conference, Cincinnati, OH, July 2007.
[34] H. Gray, S. Provost, M. Glogoswki, and A. Demaire, "Inmarsat 4F1 Plasma Propulsion System Initial Flight Operations," IEPC 2005-082, 29th International Electric Propulsion Conference, Princeton, NJ, Nov. 2005.
[35] H.L. Gray and U.P. Kamath, "Intelsat 10 Plasma Propulsion System Initial Flight Operations," AIAA 2005-3672, 41st Joint Propulsion Conference, Tucson, AZ, July 2005.

[36] A.G. Kozlov, V.F. Petrusevitch, V.A. Rayevsky, A.V. Romashko, and Y.M. Yermoshkin, "Experience of Flight Operation of Electric Propulsion Subsystems with Stationary Plasma Thrusters on Spacecrafts Developed by NPO PM," IEPC 95-11, 24th International Electric Propulsion Conference, Moscow, Russia, Sept. 1995.

[37] A. Bober, K. Kozubsky, G. Komarow, N. Maslennikov, A. Kozlov, and A. Romashko, "Development and Qualification Test of a SPT Electric Propulsion System for "GALS" Spacecraft," IEPC 93-008, 23rd International Electric Propulsion Conference, Seattle, WA, Sept. 1993.

[38] B.A. Arkhipov, A.S. Bober, V. Kim, K. Kozubsky, G.A. Komarov, and N.A. Maslennikov, "SPT Electric Propulsion System for Spacecraft Orbit Maneuvering," RGC-EP-92-07, 1st Russian-German Conference on Electric Propulsion, March 1992.

[39] K. De Grys, B. Welander, J. Dimicco, S. Wenzel, B. Kay, V. Khayms, and J. Paisley, "4.5 kW Hall Thruster System Qualification Status," AIAA 2005-3682, 41st Joint Propulsion Conference, Tucson, AZ, July 2005.

[40] W.A. Hoskins, R.S. Aadland, N.J. Meckel, L.A. Talerico, and J.M. Monheiser, "NEXT Ion Propulsion System Production Readiness," AIAA 2007-5856, 43rd Joint Propulsion Conference, Cincinnati, OH, July 2007.

[41] J.S. Snyder and J.R. Brophy, "Performance Characterization and Vibration Testing of 30-cm Carbon-Carbon Ion Optics," AIAA 2004-3959, 40th Joint Propulsion Conference, Fort Lauderdale, FL, July 2004.

[42] J.R. Brophy, G.B. Ganapathi, C.E. Garner, J. Gates, J. Lo, M.G. Marcucci, and B. Nakazono, "Status of the Dawn Ion Propulsion System," AIAA 2004-3433, 40th Joint Propulsion Conference, Fort Lauderdale, FL, July 2004.

[43] M.G. Marcucci and J.E. Polk, "NSTAR Xenon Ion Thruster on Deep Space 1: Ground and flight tests," Review of Scientific Instruments, Vol. 71, No. 3, March 2000, pps. 1389-1400.