THE SOIL MOISTURE ACTIVE/PASSIVE (SMAP) MISSION RADAR: A NOVEL CONICALLY SCANNING SAR

Michael Spencer, Samuel Chan, Louise Veilleux, Kevin Wheeler

Jet Propulsion Laboratory, California Institute of Technology
4800 Oak Grove Drive, Pasadena, CA 91109-8099
phone: (818)354-1175, fax: (818)393-5184, email: Michael.W.Spencer@jpl.nasa.gov

Keywords: Soil Moisture, L-Band

ABSTRACT

The Soil Moisture Active/Passive (SMAP) mission is a NASA mission identified by the NRC "decadal survey" to measure both soil moisture and freeze/thaw state from space. The mission will use both active radar and passive radiometer instruments at L-Band. In order to achieve a wide swath at sufficiently high resolution for both active and passive channels, an instrument architecture that uses a large rotating reflector is employed. The active radar will further utilize SAR processing in order to obtain the sub-footprint resolution necessary for the geophysical retrievals. The SMAP radar has a unique geometry where the antenna footprint is continuously rotated about nadir in a conical fashion, as opposed to the more common side-looking SAR design. In additional to the unconventional scan geometry, the SMAP radar must address the effects of Faraday rotation and radiofrequency interference (RFI), both consequences of the L-Band frequency of operation.

1. INTRODUCTION

In January 2007, the U.S. National Research Council (NRC) released the first-ever decadal survey of Earth science, *Earth Science and Applications from Space: National Imperatives for the Next Decade and Beyond [1]*. The study was sponsored by NASA, NOAA, and USGS in order to provide community consensus recommendations to guide the agencies' space-based Earth observation programs in the coming decade. This "decadal study" report recommended a set of 17 missions in three time phases to achieve the needed observations.

The Soil Moisture Active/Passive (SMAP) Mission was recommended to launch in the first part of the decade (2010 - 2013). The science objectives of SMAP are to provide frequent, global measurements of surface soil moisture and surface freeze/thaw state. These measurements will be used to enhance the understanding of water, energy, and carbon cycles, as well as improve weather and climate prediction. To measure both soil moisture and freeze/thaw state at the required resolution, a combined active/passive L-Band microwave instrument is needed [2].

The key instrument requirements were determined by the SMAP science working group to be: 1) Dual-polarization (linear H and V) L-Band radiometer measurements at 40 km resolution, 2) Linear HH, VV and HV L-Band radar measurements at 3 km resolution or better, and 3) A wide swath to insure global three-day refresh time for these measurements (1000 km swath at the selected orbit altitude of 670 km).

As a solution to this set of requirements, a 6-meter, conically-scanning reflector antenna architecture was selected for the instrument design. The deployable mesh antenna is shared by both the radiometer and radar instruments by using a single L-Band feed. Whereas the radiometer resolution is defined in the standard manner as the real-aperture antenna footprint, the higher resolution radar measurements are obtained by utilizing synthetic aperture radar (SAR) processing (see Fig. 2). This paper focuses on the design trade-offs and performance characteristics of the SMAP radar. Although large deployable mesh antennas have been used in spaceborne communication applications, this will mark the first time such technology is applied in a rotating configuration for high-resolution remote sensing. The unique aspects associated with extending standard SAR techniques to the conically scanning radar geometry will also be addressed.

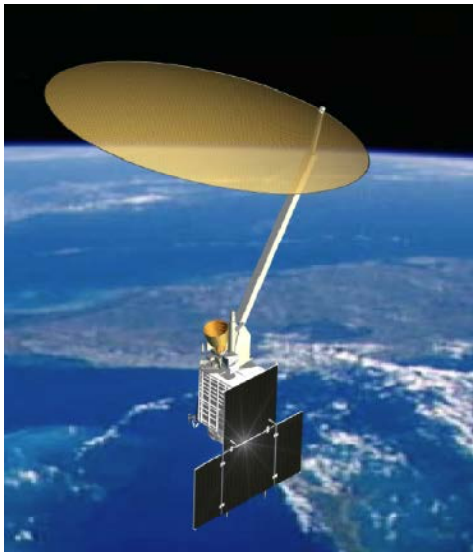

Figure 1 - Artist rendition of SMAP in orbit.

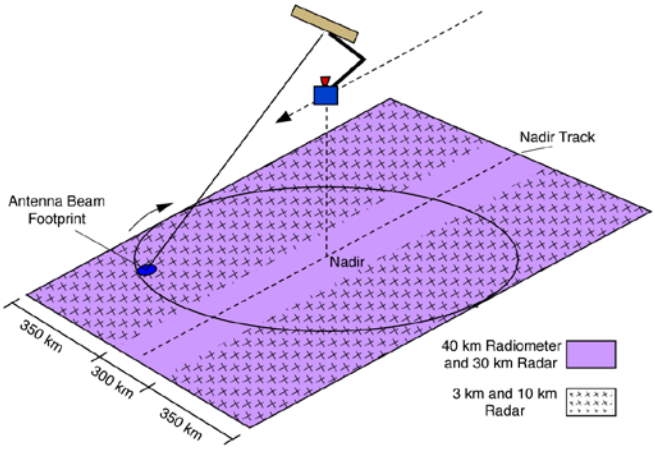

Figure 2 - SMAP measurement geometry showing radiometer swath, and high- and low-resolution radar swaths.

2. OVERALL INSTRUMENT DESCRIPTION

2.1 Instrument Architecture

As with most microwave instruments, the antenna is the dominant instrument subsystem that both determines the ultimate measurement performance and governs spacecraft accommodation. In order to meet the 3-day revisit requirement at the equator, a wide measurement swath is necessary. The radiometer and radar resolution requirements at L-Band dictate that a relatively large antenna aperture must be employed. As determined by previous trade-off studies (see [2]), the most economical approach for accomplishing the required simultaneous radiometer and radar requirements is to utilize a shared antenna/feed approach. A reflector antenna was chosen to ensure that system calibration requirements, primarily for the radiometer, are met. Large, rotating antennas have been proposed for L-Band remote sensing in the past (see [3]). As shown in Fig. 2, rotating the reflector in a conical fashion about the nadir axis provides a wide swath of measurements at a constant incidence angle. A variety of other instrument architectures were considered (phased array, separate antennas for radiometer and radar, etc.), but the rotating shared reflector approach was found to be optimum in terms of maximizing performance while minimizing implementation cost and risk.

The overall SMAP architecture is shown in Fig. 3, with the rotating reflector assembly, feed assembly, radiometer electronics subsystem, and radar electronics subsystem indicated.

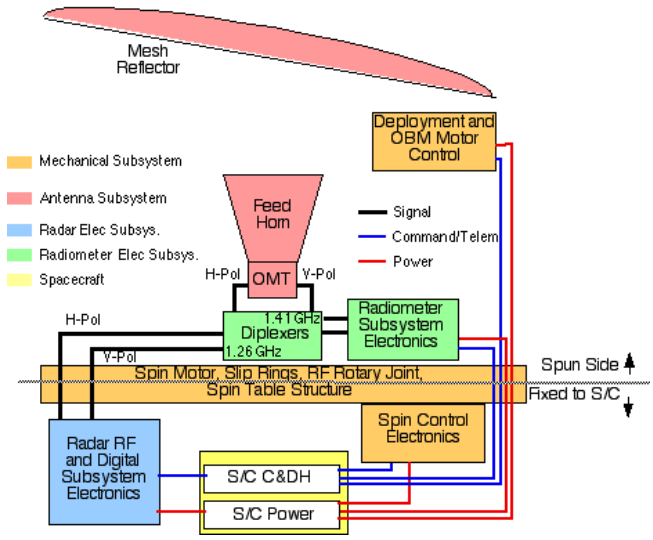

Figure 3 - SMAP instrument functional block diagram.

2.2 Antenna Reflector/Spin Assembly

Due to the relatively large size of the required reflector (6-meter projected aperture), a deployable structure is necessary. Deployable mesh reflector technology is quite mature for spaceborne communications applications, and analyses of the mesh material have indicated its acceptability for remote sensing applications [3]. The unique aspect of the SMAP application is the necessity for rotating the large antenna. At the nominal SMAP altitude of 670 km, the reflector must be rotated at a rate of 14.6 rpm to maintain contiguity (i.e., minimum overlap) of the measurements in the along-track direction. Key requirements that must be met by the reflector assembly include: 1) All RF performance requirements (gain, beam efficiency, etc.) must be met under the spinning conditions, 2) The total momentum generated must be within the amount the spacecraft is capable of compensating, and 3) The disturbances resulting from residual imbalances must be sufficiently small as to not effect overall pointing or impart excessive loads to the spin motor bearings.

The baseline feed assembly design employs a single horn, capable of dual-polarization and dual frequency (radiometer frequency at 1.41 GHz, and the radar frequencies at 1.26 and 1.29 GHz). As shown in Fig. 3, the radar and radiometer frequencies will be separated by diplexers and routed to the appropriate electronics for detection. Note that, in the baseline design, the radiometer electronics are located on the spun side of the interface. Slip rings provide a signal interface to the S/C. The more massive and more thermally dissipative radar electronics are on the despun side, and the transmit/receive pulses are routed to the spun side via an two channel RF rotary joint.

Table 1 - SMAP instrument parameters.

Antenna Key Parameters	
Beamwidth (1-way, 3 dB)	2.6°
Look Angle, Incidence Angle	35.0°, 39.3°
Peak Gain	36 dBi
Rotation Rate	14.6 rpm
Radiometer Key Parameters	
Center Frequency	1.41 GHz
Resolution (root footprint area)	38 km
Channels	T_A, T_B, U_{AB}
Bandwidth, Integration Time	25 MHz, 84 msec
Precision	0.4 K
Calibration Stability	0.5 K
Total Relative Error	0.64 K
Radar Key Parameters	
Transmit Frequencies	1.26 GHz (H), 1.29 GHz (V)
Channels	HH, VV, HV
PRF, Pulse Length	3.5 kHz, 40 µsec
Azimuth Dwell Time	37 ms
Transmit Bandwidth	1 MHz
Peak Transmit Power	200 W
Single-look res (broadside)	250 m x 400 m
Noise Equiv. σ^o (broadside)	-34 dB

2.3 Radar Parameters

To obtain the required 3 km and 10 km resolution for the freeze/thaw and soil moisture products, the radar will employ pulse compression in range and Doppler discrimination in azimuth to sub-divide the antenna footprint. This is equivalent to the application of synthetic aperture radar (SAR) techniques to the conically scanning radar case [4]. Due to squint angle effects, the high-resolution products will be somewhat degraded within the 300-km band of the swath centered on the nadir track (see Fig. 2 and Fig. 4), with azimuth resolution capability decreasing over this region as the target area approaches the nadir track. The baseline system has both V- and H-pol channels. An additional channel measures the HV cross-pol return.

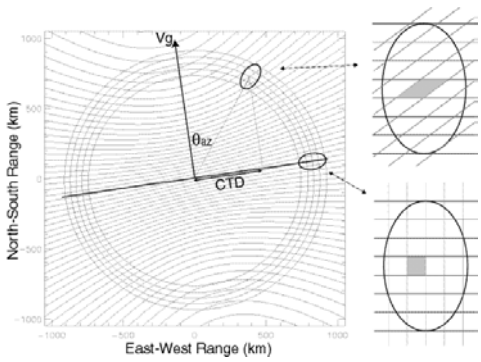

Figure 4 - Radar measurement geometry as a function of scan angle. The spacecraft velocity vector is shown as v_g. Also shown are the iso-range and iso-Doppler contours that govern the radar pixel formation.

There are two requirements placed on the radar relative error. The soil moisture measurement requirement places a 0.5 dB relative error on both the vertical and horizontal co-polarized backscattering coefficient measurements at 10 km resolution. The freeze/thaw state measurement places a 1 dB requirement on the relative error of each vertical and horizontal co-polarized backscatter measurement at 3 km resolution. The radar relative error depends on the signal-to-noise ratio (SNR) and the number of independent samples, or "looks", averaged in each measurement, as well as the relative calibration error. Looks will be obtained by averaging in both range and azimuth. The 1-MHz bandwidth will yield a ground range resolution of approximately 250 m and will result in a minimum of 12 looks in range for 3 km cells and 40 looks for 10 km cells.

As shown in Fig. 4, the Doppler diversity will be maximized at a scan angle perpendicular to the platform velocity, leading to a single-look azimuth resolution of approximately 400 m. The single-look resolution will degrade as the scan angle approaches the platform velocity vector (θ_{az} = 0 in Fig. 3), reaching 1500 m at the inner swath edge (150 km cross-track). Table 1 provides a summary of the SMAP instrument performance requirements.

To evaluate the pixel resolution size, a point target simulator was constructed. This simulation includes all of the geometric effects discussed above as well as the antenna pattern roll-off effects. The resulting Point Target Response Function (PTRF) indicates the spatial response associated with a given pixel, including side-lobes and range/Doppler ambiguities. The PTRF analysis verified that: 1) The range (elevation) resolution is approximately 250 m, 2) The azimuth resolution varies as expected as a function of the azimuth position of the antenna, with the best resolution of 400 m obtained for the side-looking case, and 3) Range/Doppler ambiguities do not exceed -20 dB, with the worst-case ambiguity levels experienced for the side-looking beam geometry.

2.4 Faraday Rotation

The ionosphere is a gyrotropic media, and has a well-known impact on radar measurement at L-Band. For typical surface polarimetric properties, it is straightforward to calculate the measurement error as a function of the Faraday rotation angle (see Fig. 5). The SMAP orbit is dawn/dusk geosynchronous, with the primary soil moisture observation occurring at around 6 am local time. This ensures that the Faraday rotation angle is around 5 degrees on average, and that the resulting error in backscatter cross-section is no more than around 0.1 dB.

2.5 Radio-Frequency Interference (RFI)

Anthropogenic radio emissions are a know interferer for both passive and active remote sensing. Both airborne and spaceborne systems have shown the L-Band spectral region to be susceptible. Must emissions at L-Band, however, are relatively narrow band. Because the SMAP radar itself is a

narrow band system (1 MHz linear chirp) the strategy for SMAP is to have the center transmit frequency commandable. If persistent RFI is encountered in a given band over a given region, the center frequency is simply commanded to a location in the spectrum. Despite the best efforts to operate the SMAP radar in a "clear" band, it is inevitable that some RFI contamination will be observed. Therefore, as a second strategy, RFI filtering and detection will be performed as part of ground data processing. Most RFI is observed to be from pulsed radar sources on the Earth. Work performed to data indicates that these pulsed signals are readily identifiable amongst the noise-like SMAP returns from the Earths surface. Further, simulated techniques to excise the samples contaminated by RFI have been effective at producing SMAP radar measurements where the residual contamination is small. (SMAP radar RFI mitigation is discussed in more detail in Reference [6]).

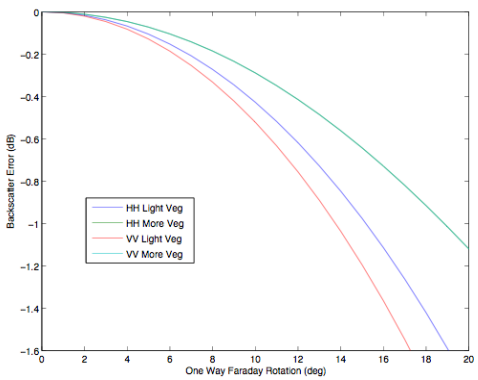

Figure 5 – Co-Pol backscatter cross-section measurement error as a function of uncorrected one-way Faraday rotation.

REFERENCES

[1] *Earth Science and Applications from Space: National Imperatives for the Next Decade and Beyond*, National Academy of Sciences, Washington, D.C., 2007.

[2] D. Entekhabi, E. Njoku, P. Houser, M. Spencer, T. Doiron, J. Smith, R. Girard, S. Belair, W. Crow, T. Jackson, Y. Kerr, J. Kimball, R. Koster, K. McDonald, P. O'Neill, T. Pultz, S. Running, J.C. Shi, E. Wood, J. vanZyl, "The Hydrosphere State (HYDROS) Mission: An Earth System Pathfinder for Global Mapping of Soil Moisture and Land Freeze/Thaw," *IEEE Transactions on GeoScience and Remote Sensing*, Vol. 42, No. 10, October 2004, pp. 2184-2195.

[3] E. Njoku, W. Wilson, S. Yueh, R. Freeland, R. Helms, W. Edelstein, G. Sadowy, D. Farra, R. West, K. Oxnevad, T. Campbell, W. Lawrence, Y. Rahmat-Samii, H. Feingold, G. Didinsky, J. Rauwolf, M. Thompson, G. Konicke, "Spaceborne Microwave Instrument for High Resolution Remote Sensing of the Earth Surface Using a Large-Aperture Mesh Antenna," NASA/JPL Publication 01-09, September, 2001.

[4] M. Spencer, W. Tsai, D. Long, "High-Resolution Measurements With a Spaceborne Pencil-Beam Scatterometer Using Combined Range/Doppler Discrimination Techniques," *IEEE Transactions in Geoscience and Remote Sensing*, Vol. 41, No. 3, March 2003, pp. 567-581.

[5]P. Wright, S. Quegan, N. Wheaton, D. Hall, "Faraday Rotation Effects on L-Band Spaceborne SAR Data," *IEEE Transactions in Geoscience and Remote Sensing*, Vol. 41, No. 12, December 2003, pp. 2735-2744.

[6] S. Chan and M. Spencer, "RFI Study for the SMAP Radar," *Proceedings of the IEEE Radar Conference, Pasadena, CA, May*, 2009.

Acknowledgment

The research described in this paper was carried out at the Jet Propulsion Laboratory, California Institute of Technology, under a contract with the National Aeronautics and Space Administration.