National Aeronautics and Space Administration
Jet Propulsion Laboratory
California Institute of Technology

# 1st Year Work at JPL

Joel Kaluzny
Jet Propulsion Laboratory
Section 355
11/16/09

# WFMOS Proposal

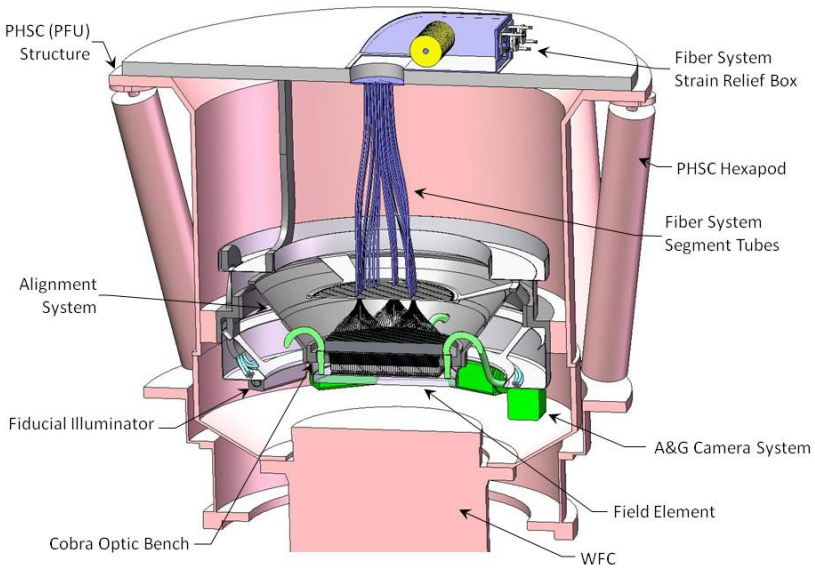
PHSC (PFU)
Structure
Fiber System
Strain Relief Box
PHSC Hexapod
Fiber System
Segment Tubes
Alignment
System
Fiducial Illuminator
A&G Camera System
Field Element
Cobra Optic Bench
WFC

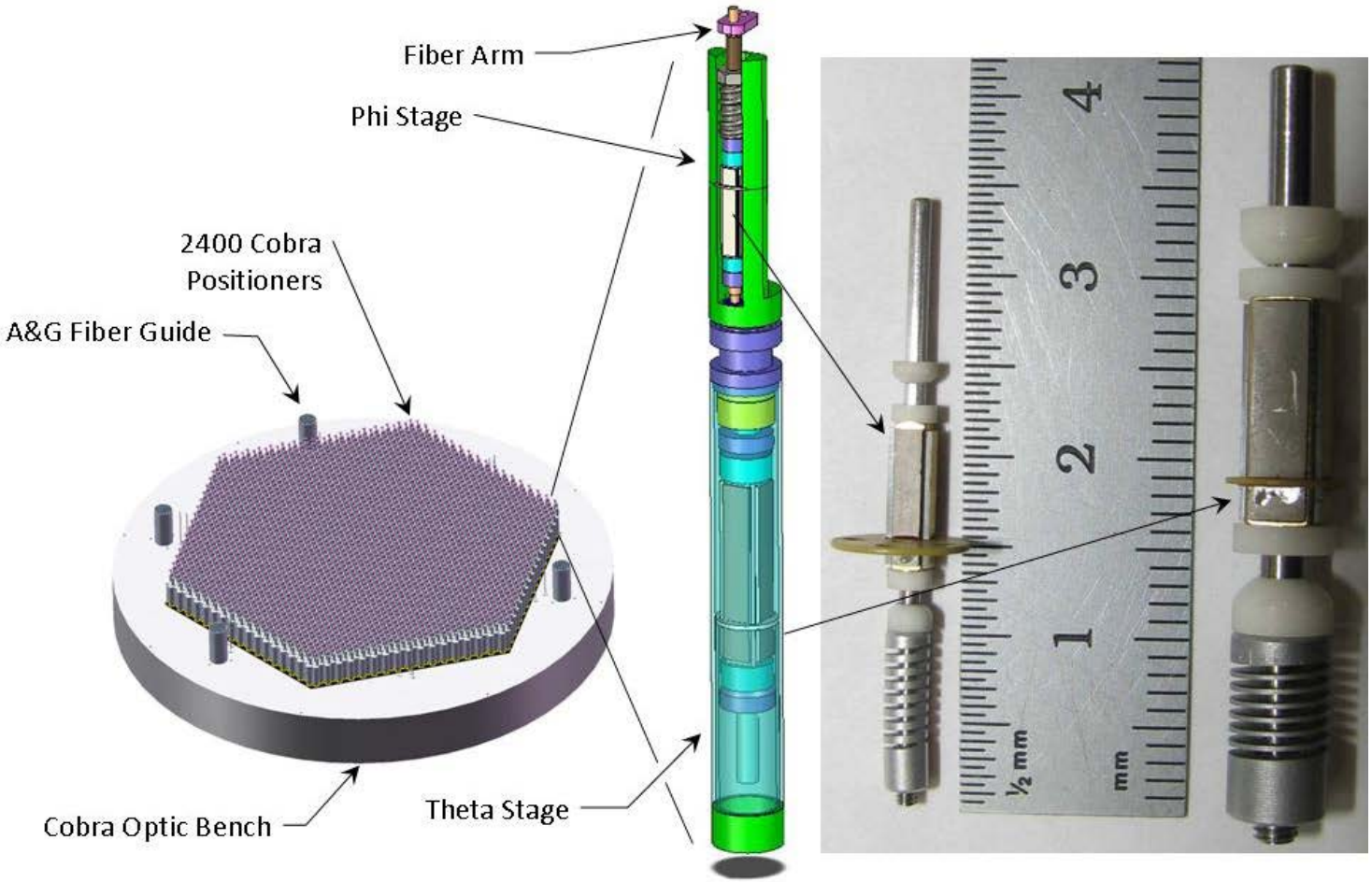
Fiber Arm
Phi Stage
2400 Cobra
Positioners
A&G Fiber Guide
Cobra Optic Bench
Theta Stage
½ mm
mm
1
2
3
4

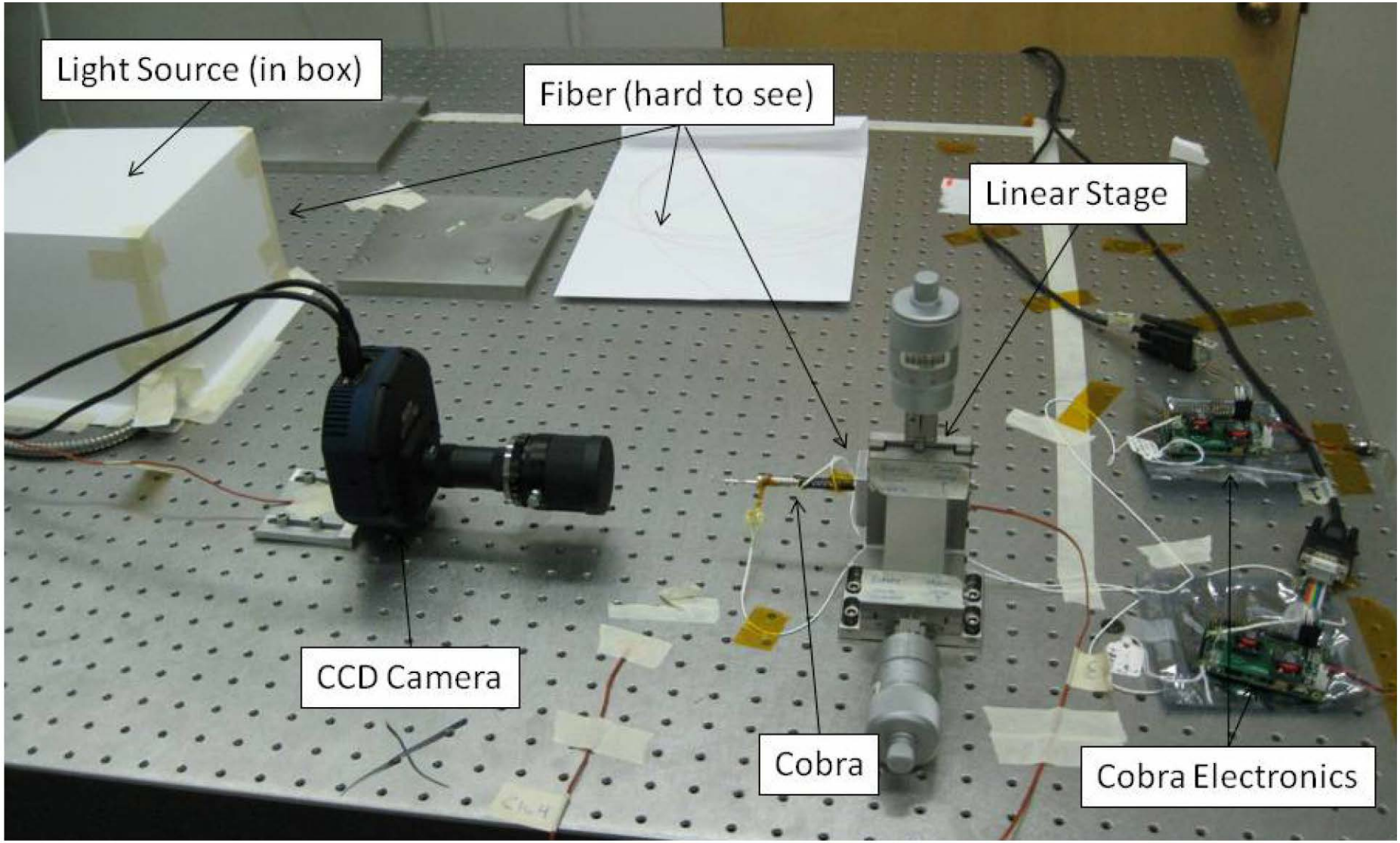
Light Source (in box)
Fiber (hard to see)
Linear Stage
CCD Camera
Cobra
Cobra Electronics

# Mirror Figure Correction

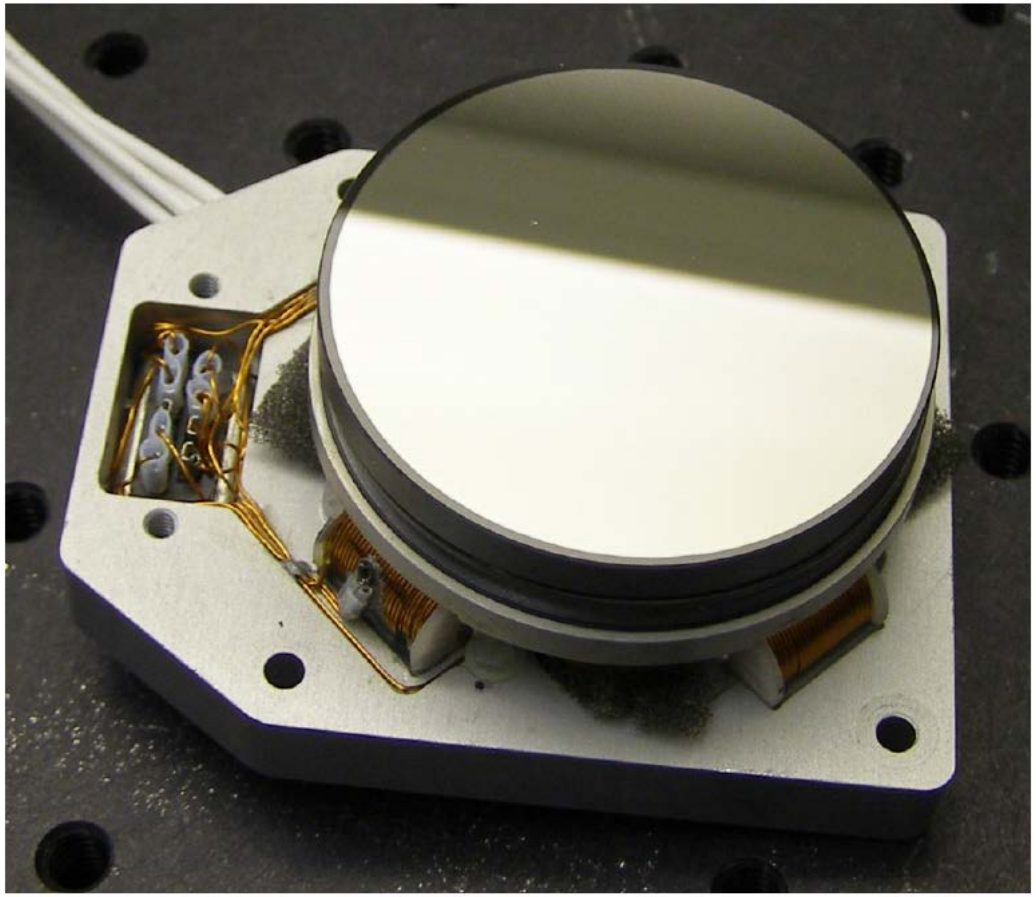

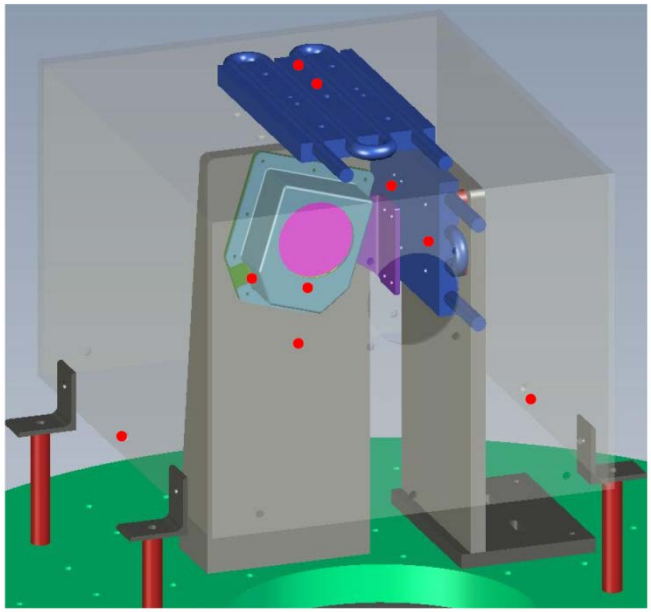

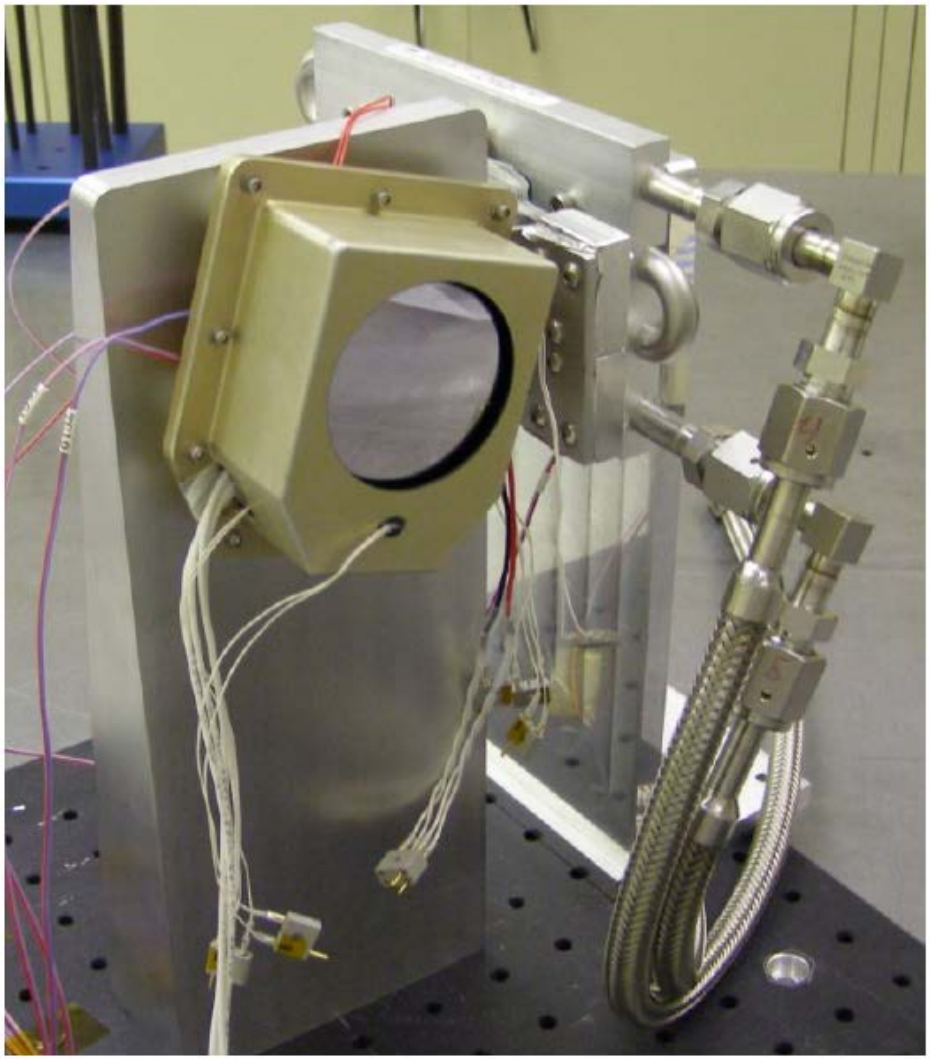

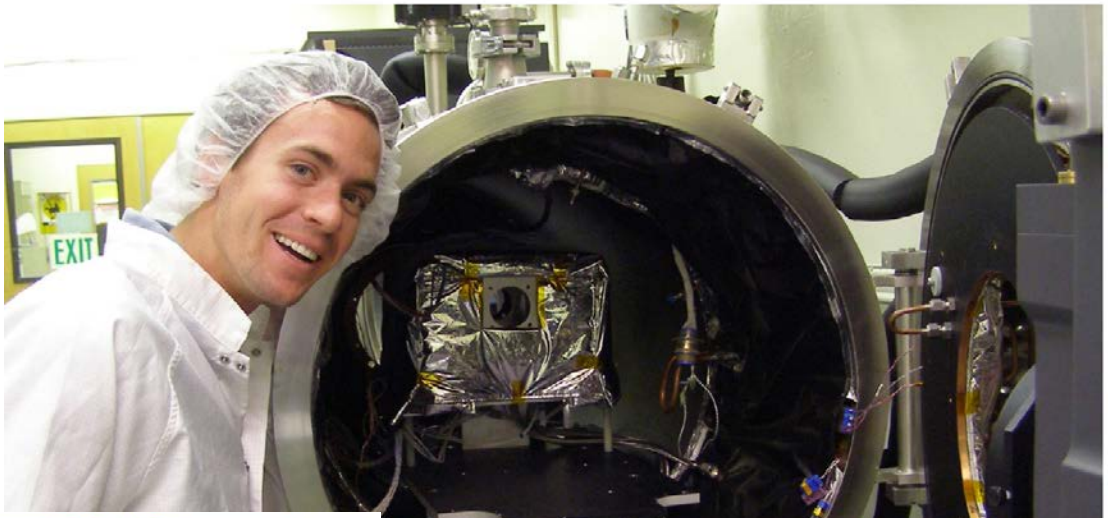
EXIT

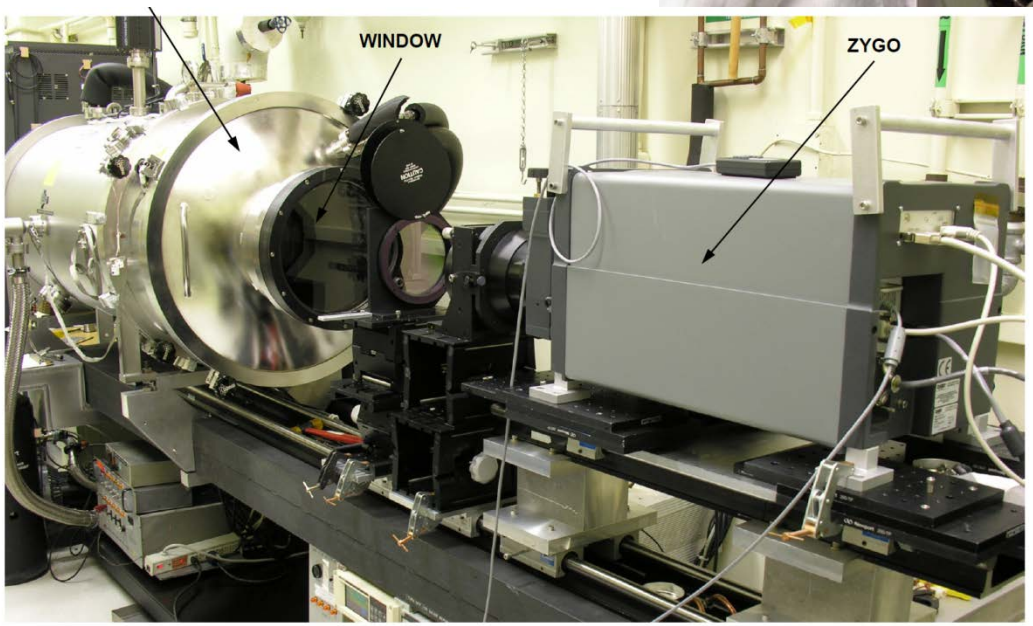
WINDOW
ZYGO

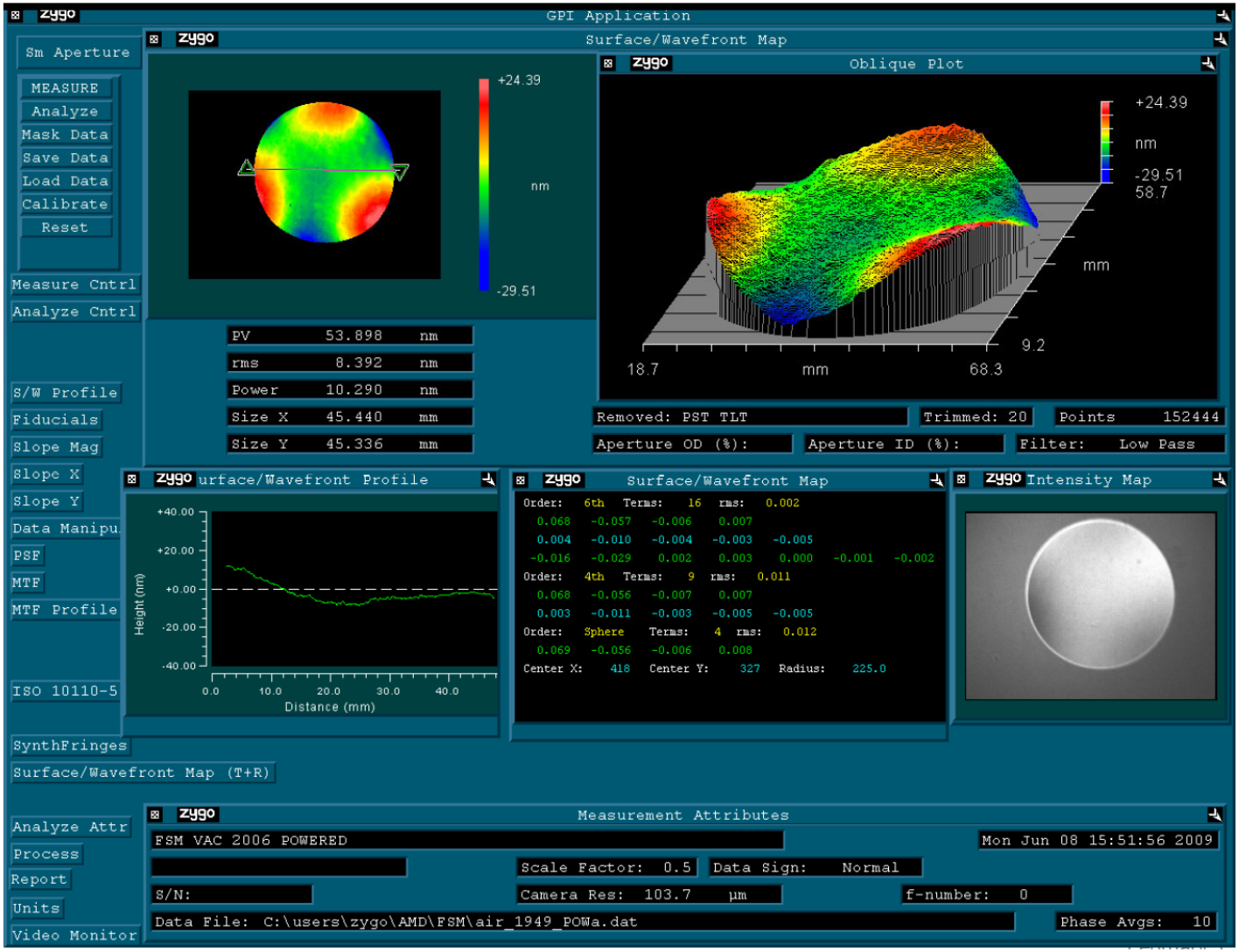
GPI Application
Surface/Wavefront Map
Oblique Plot
Sm Aperture
MEASURE
Analyze
Mask Data
Save Data
Load Data
Calibrate
Reset
Measure Cntrl
Analyze Cntrl
S/W Profile
Fiducials
Slope Mag
Slope X
Slope Y
Data Manipu
PSF
MTF
MTF Profile
ISO 10110-5
SynthFringes
Surface/Wavefront Map (T+R)
+24.39
nm
-29.51
PV 53.898 nm
rms 8.392 nm
Power 10.290 nm
Size X 45.440 mm
Size Y 45.336 mm
+24.39
nm
-29.51
58.7
mm
9.2
18.7
mm
68.3
Removed: PST TLT
Trimmed: 20
Points 152444
Aperture OD (%):
Aperture ID (%):
Filter: Low Pass
urface/Wavefront Profile
Height (nm)
+40.00
+20.00
+0.00
-20.00
-40.00
0.0
10.0
20.0
30.0
40.0
Distance (mm)
Surface/Wavefront Map
Order: 6th Terms: 16 rms: 0.002
0.068 -0.057 -0.006 0.007
0.004 -0.010 -0.004 -0.003 -0.005
-0.016 -0.029 0.002 0.003 0.000 -0.001 -0.002
Order: 4th Terms: 9 rms: 0.011
0.068 -0.056 -0.007 0.007
0.003 -0.011 -0.003 -0.005 -0.005
Order: Sphere Terms: 4 rms: 0.012
0.069 -0.056 -0.006 0.008
Center X: 418 Center Y: 327 Radius: 225.0
Intensity Map
Measurement Attributes
Analyze Attr
Process
Report
Units
Video Monitor
FSM VAC 2006 POWERED
Mon Jun 08 15:51:56 2009
Scale Factor: 0.5
Data Sign: Normal
S/N:
Camera Res: 103.7 µm
f-number: 0
Data File: C:\users\zygo\AMD\FSM\air_1949_POWa.dat
Phase Avgs: 10

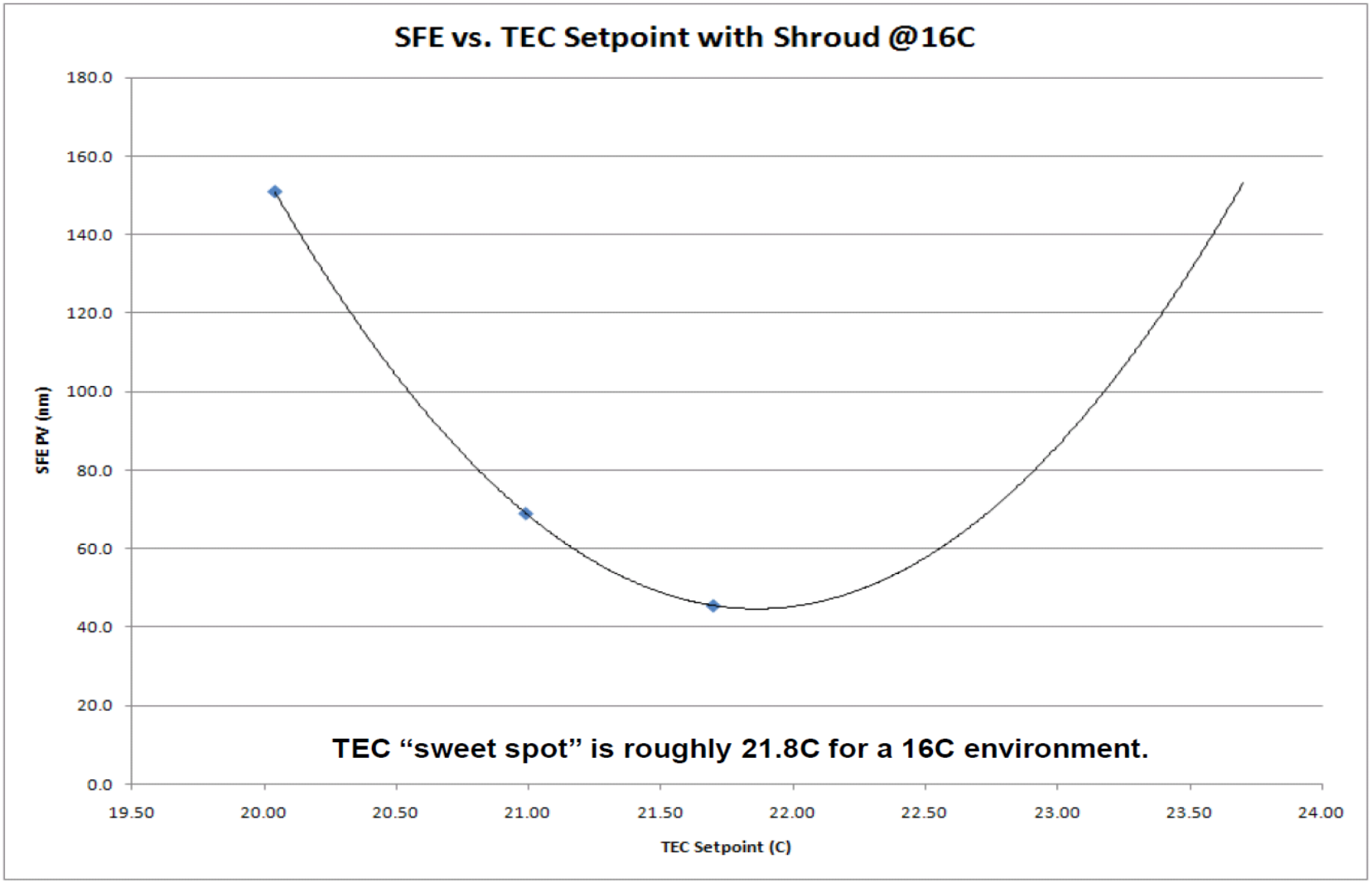
SFE vs. TEC Setpoint with Shroud @16C
180.0
160.0
140.0
120.0
100.0
80.0
60.0
40.0
20.0
0.0
SFE PV (nm)
19.50
20.00
20.50
21.00
21.50
22.00
22.50
23.00
23.50
24.00
TEC Setpoint (C)
TEC "sweet spot" is roughly 21.8C for a 16C environment.

# Liquid Core Optical Fiber

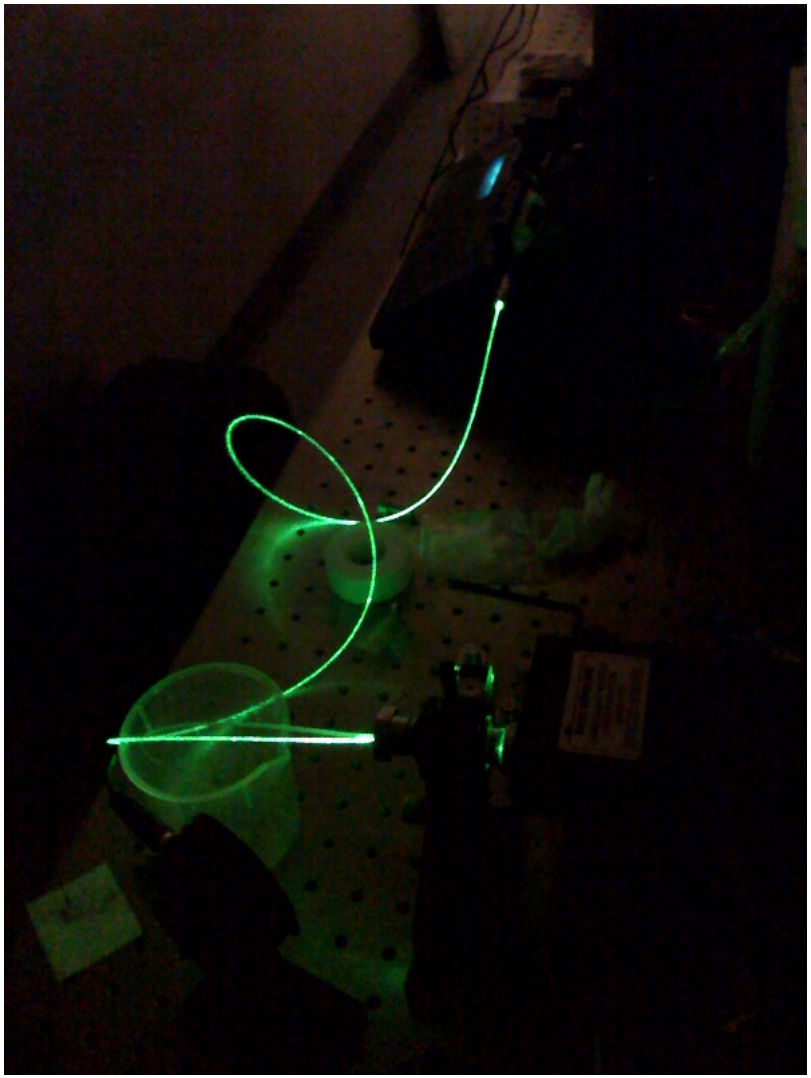

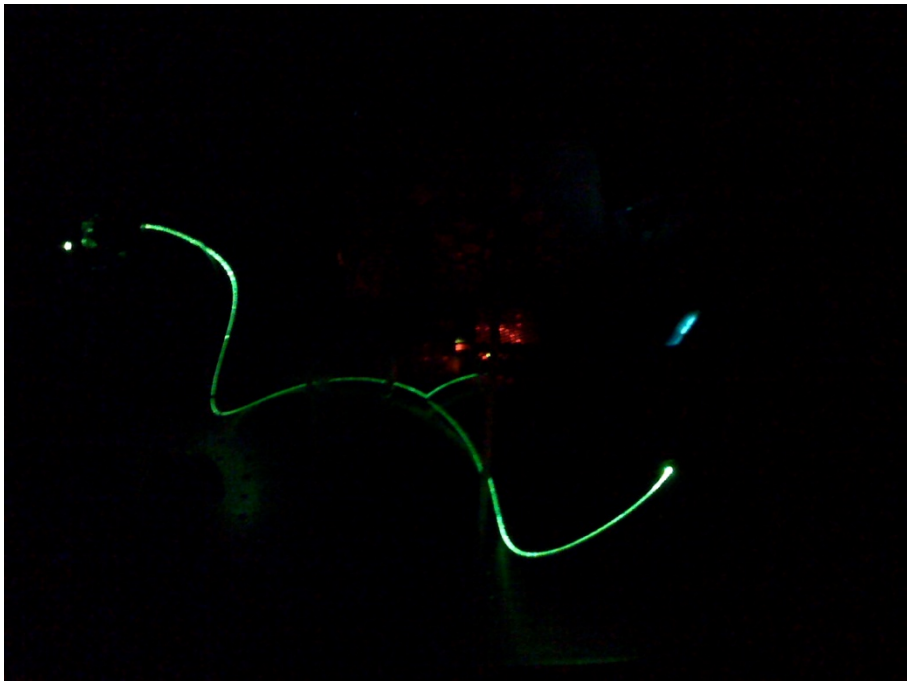

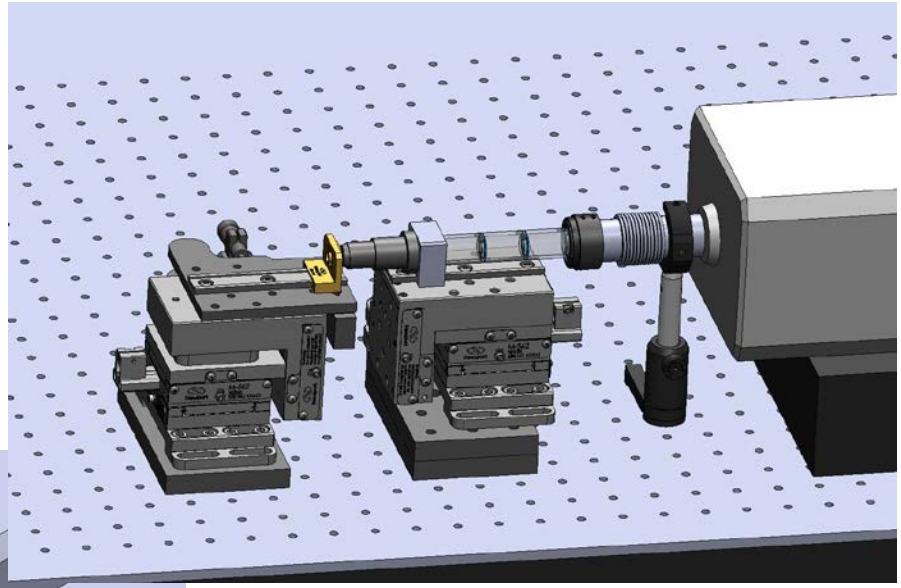

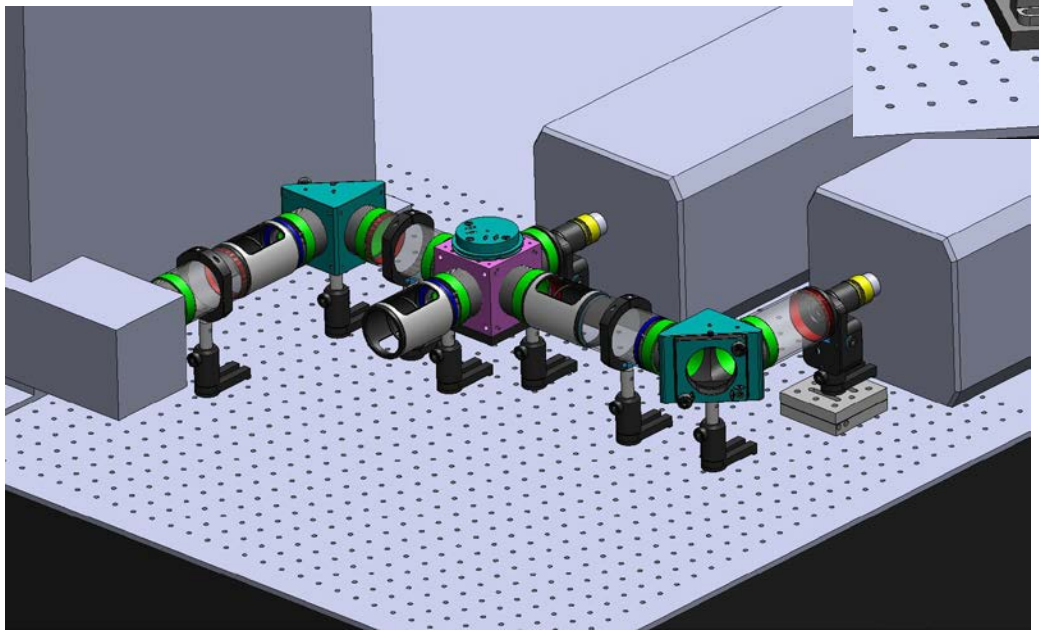

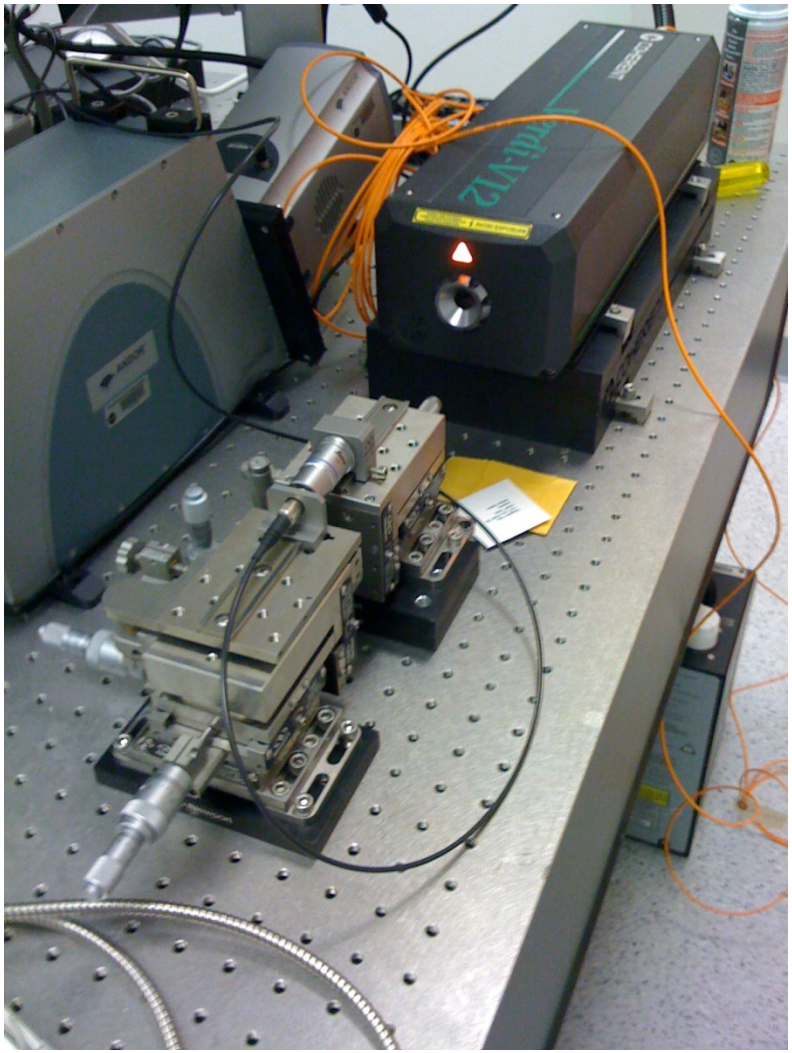
Optical
Rudi-V12

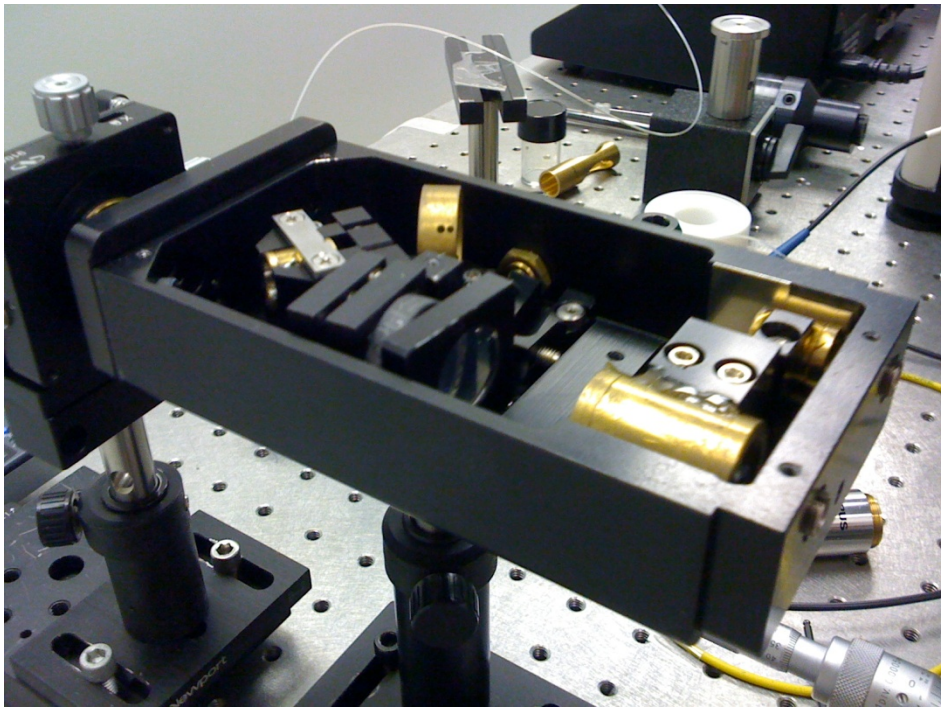

# NuSTAR

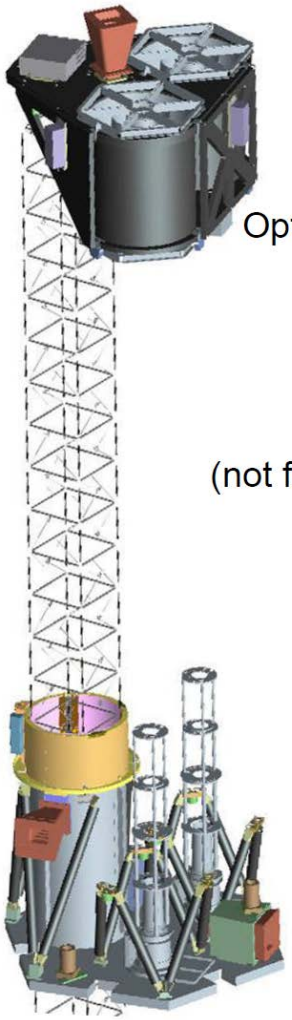
Optical Bench
(not fully deployed)
Focal Plane Bench
(FPB)

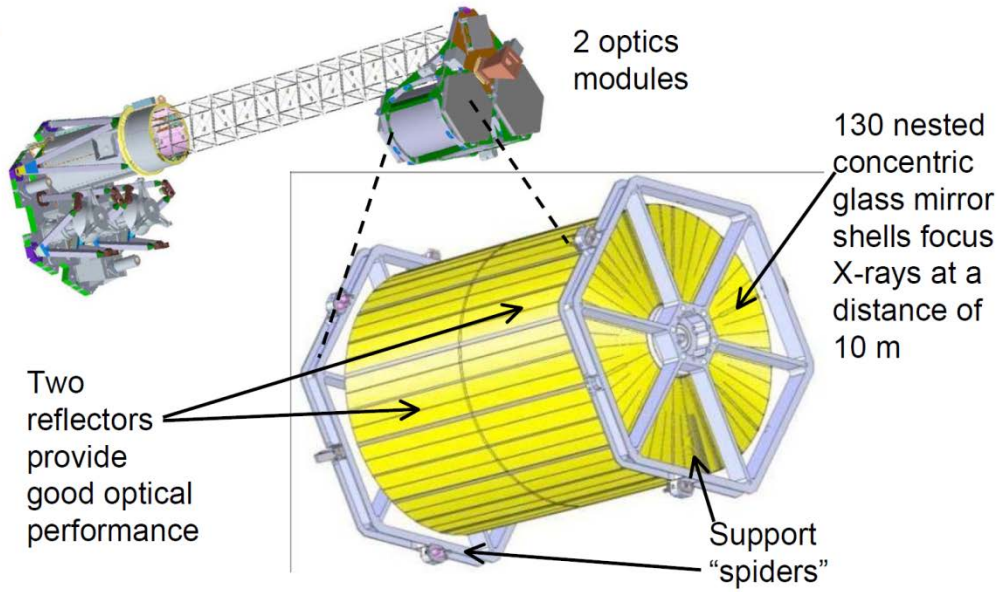
2 optics
modules
130 nested
concentric
glass mirror
shells focus
X-rays at a
distance of
10 m
Two
reflectors
provide
good optical
performance
Support
"spiders"

# *Science Objectives*

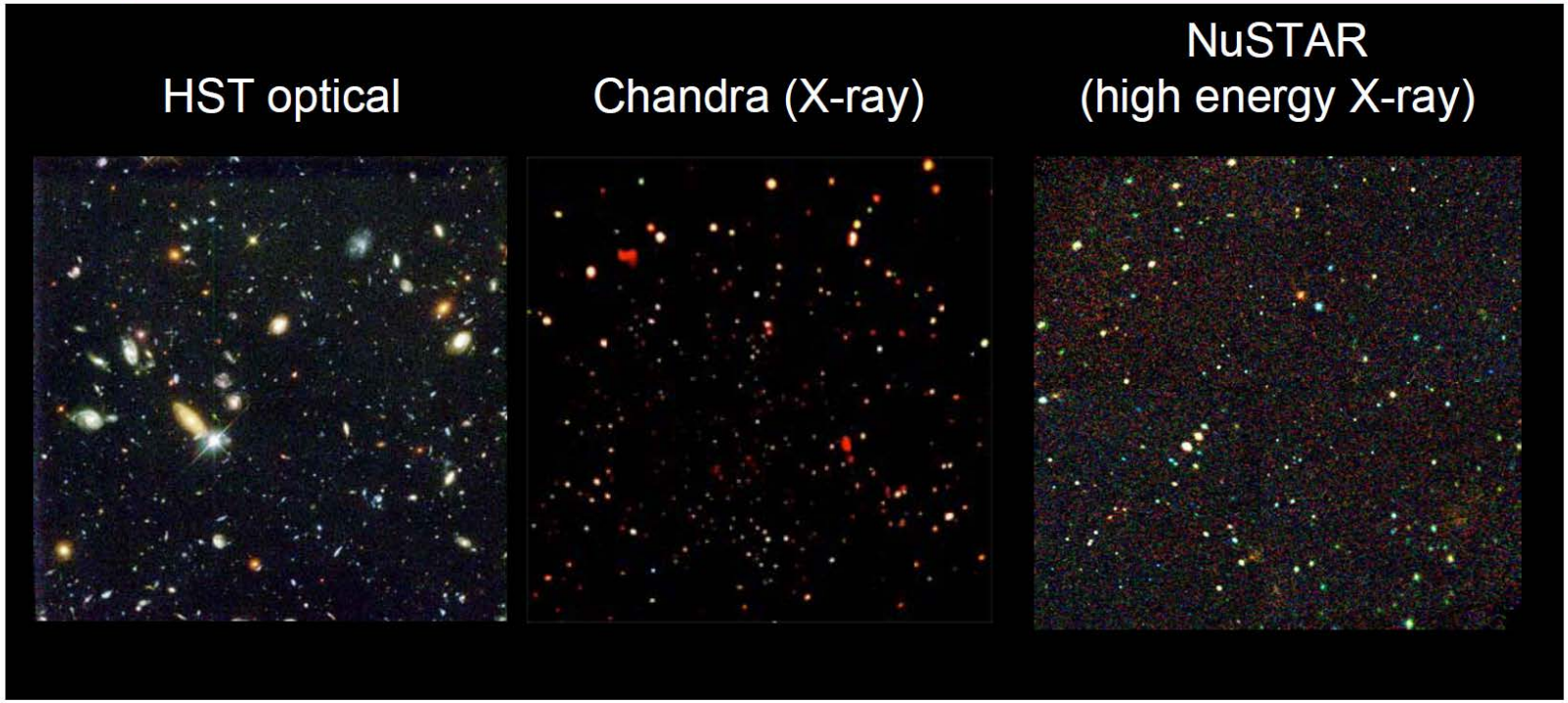


Locate massive black holes in other galaxies using the penetrating power of hard X-rays to understand the role of black holes in the formation of structures in the Universe

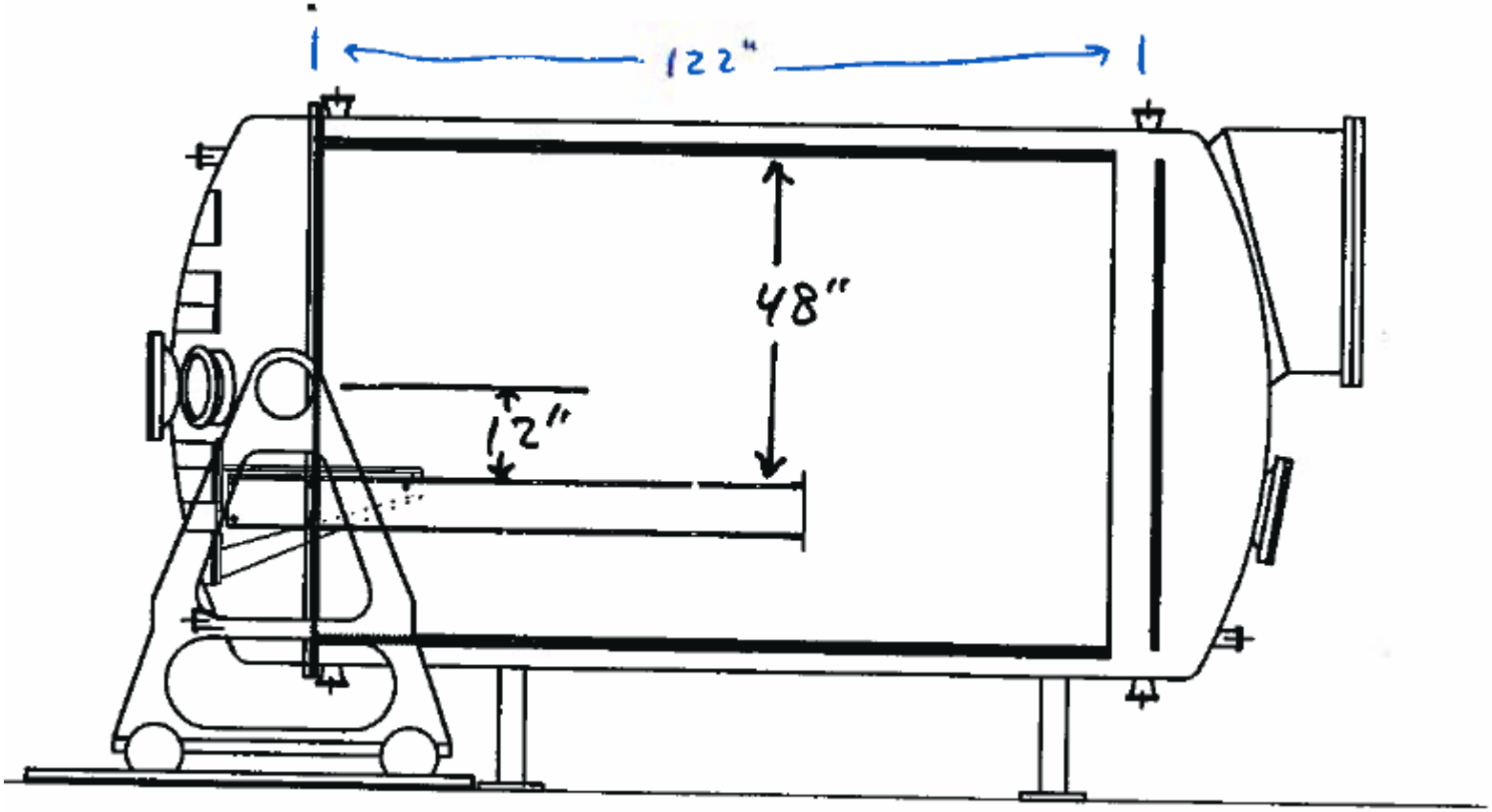
122"
48"
12"