National Aeronautics
and Space Administration

Radiation Hardening of a Wilkinson ADC for Distributed Motor Controller

Philippe Adell[1], Jeremy Yager[1], Mohammad Mojarradi[1], Benjamin Blalock[2], Zack Pannell[1], Jacob Shelton[1], Gregory Allen[1] and Raphael Some[1]

[1]Jet Propulsion Laboratory, California Institute of Technology, Pasadena, CA, 91109
[2]University of Tennessee, Department of Electrical Engineering, Knoxville, TN, 37996

Sponsored by the Mars Technology Research and Development Program at the Jet Propulsion Laboratory, California Institute of Technology

Copyright 2013 California Institute of Technology

National Aeronautics
and Space Administration

State of Practice

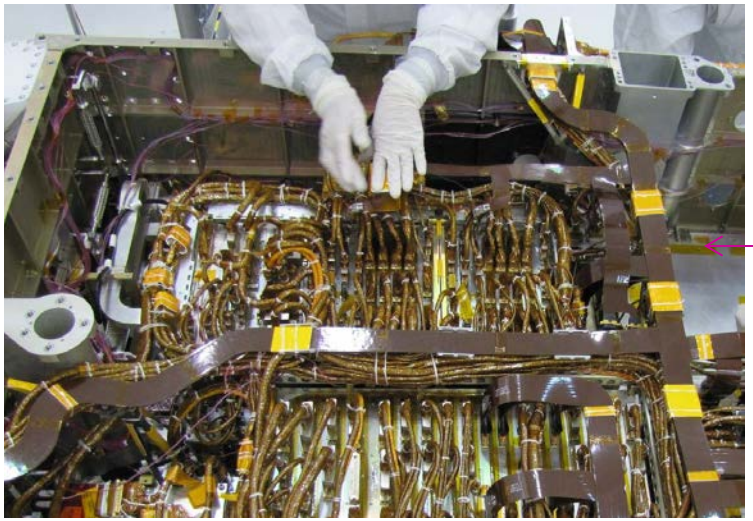

MSL Warm Electronics Box

WEB
Approach

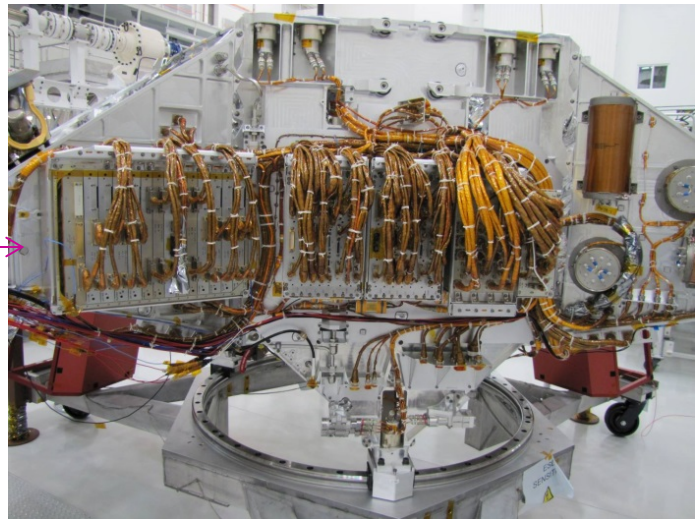

MSL Actuator wiring Harness

Physical Constraints
- Higher Weight
- Higher Volume
- Complex cabling

Higher Mission Cost

Electrical Limitation
- Electro Magnetic Interference (EMI)
- Electrical Power
- Noise

Limits Performance and Science return

Remove limitations using Distributed Architecture and Cold Capable sub-systems

National Aeronautics
and Space Administration

Cold Rover

Distributed Architecture
- Unified avionics bus
- Distributed Motor Control
- Point of Load Power Converter

Low Temp Instrument & Sensor Interface
- SiGe-REU
- DMC Analog ASIC

Low Temp Actuators
- LTM0, LTM1

Cold Avionics:
- Low Temp CPU
- Low Temp Data Storage
- Low temp Digital Interface

Low Temp Radio

Low Temp Energy Storage

Cold Rover: Low-mass, Low-power, scalable Avionics for next gen Mars missions

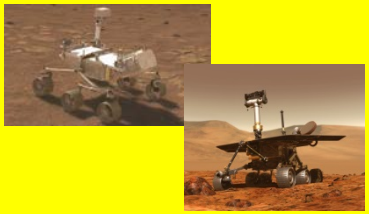

Impact: Elimination of WEB, Complex wiring
>4X reduction in power
>3X reduction in mass

National Aeronautics
and Space Administration

DMC Architecture

System Architecture

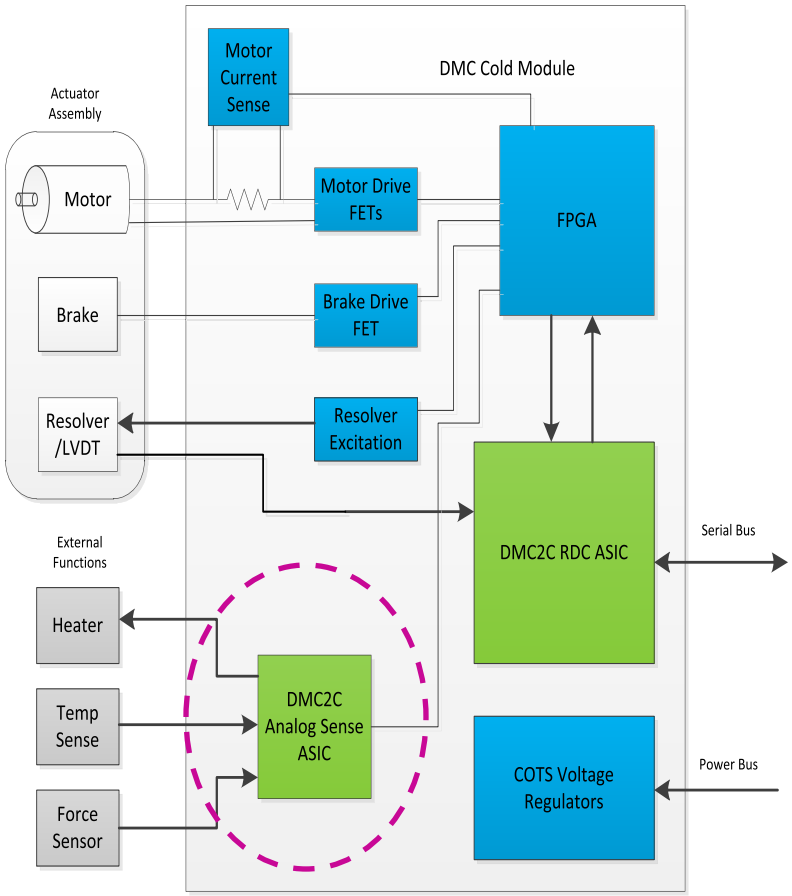

DMC

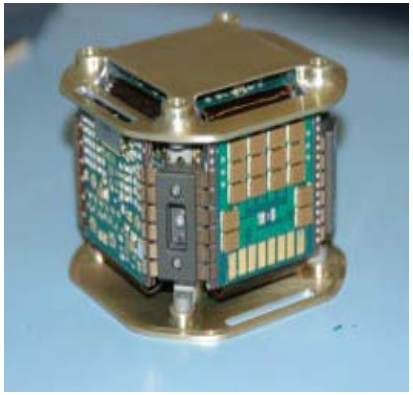

Rev 1 DMC, 1400 Components, 1kg
- Available now

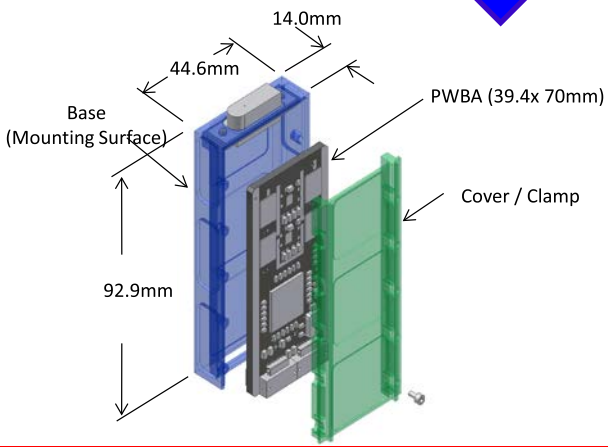

Rev 2 DMC with SiGe ASIC, 100g, 5W
- Bread board functioning,
- Form Fit Function available 2014

Telemetry and sensor reading to report the health and status of the DMC electronics module to the FPGA

National Aeronautics
and Space Administration

DMC2C
Analog Sense ASIC

IBM 5HP SiGe BiCMOS

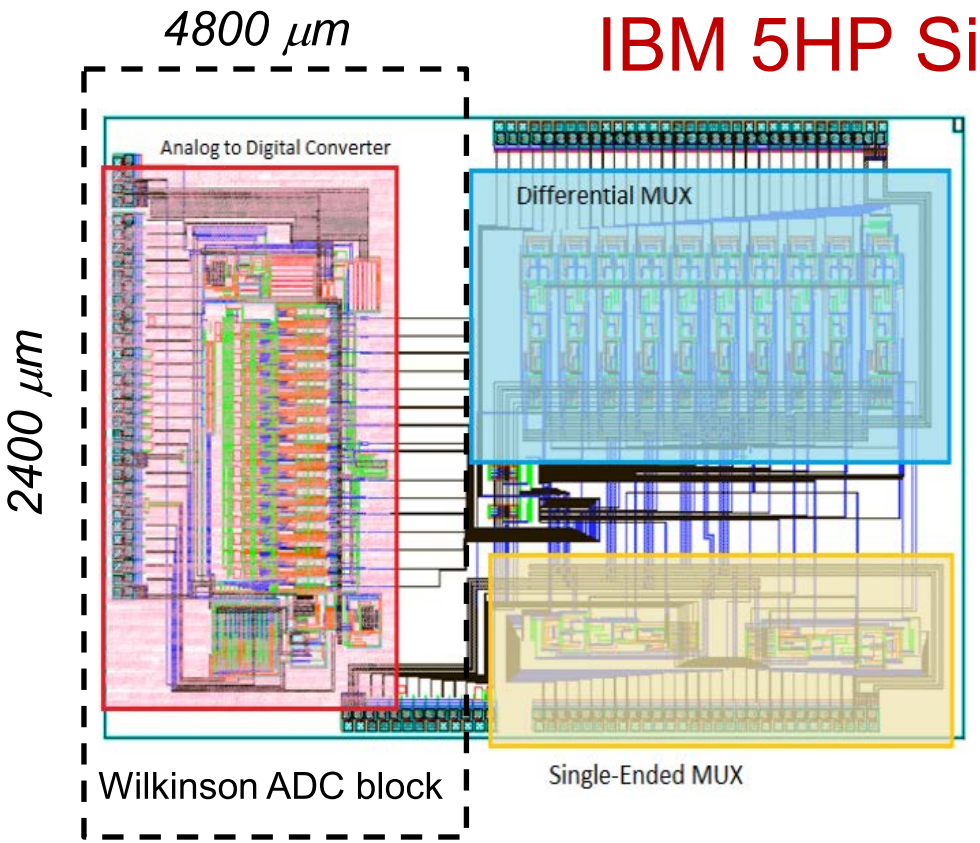

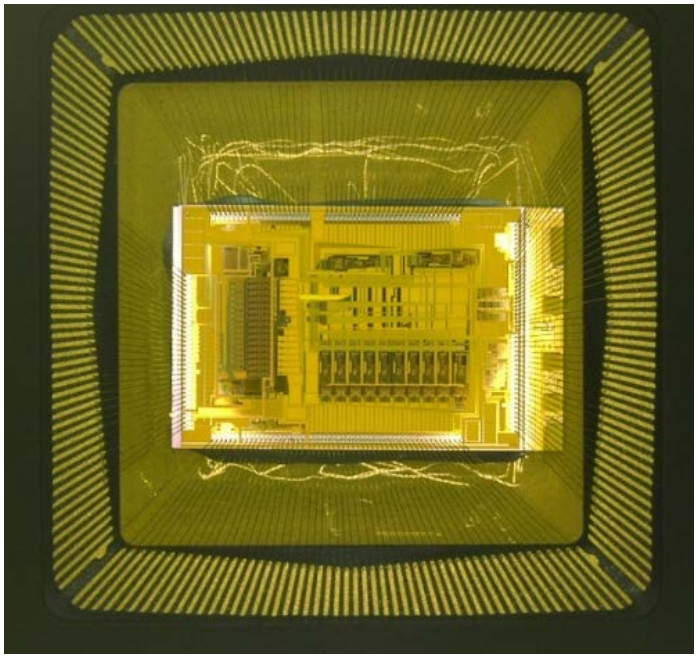

Leverage from low temperature electronics developed under the NASA's Exploration Development Technology Program

National Aeronautics
and Space Administration

Wilkinson ADC Operation

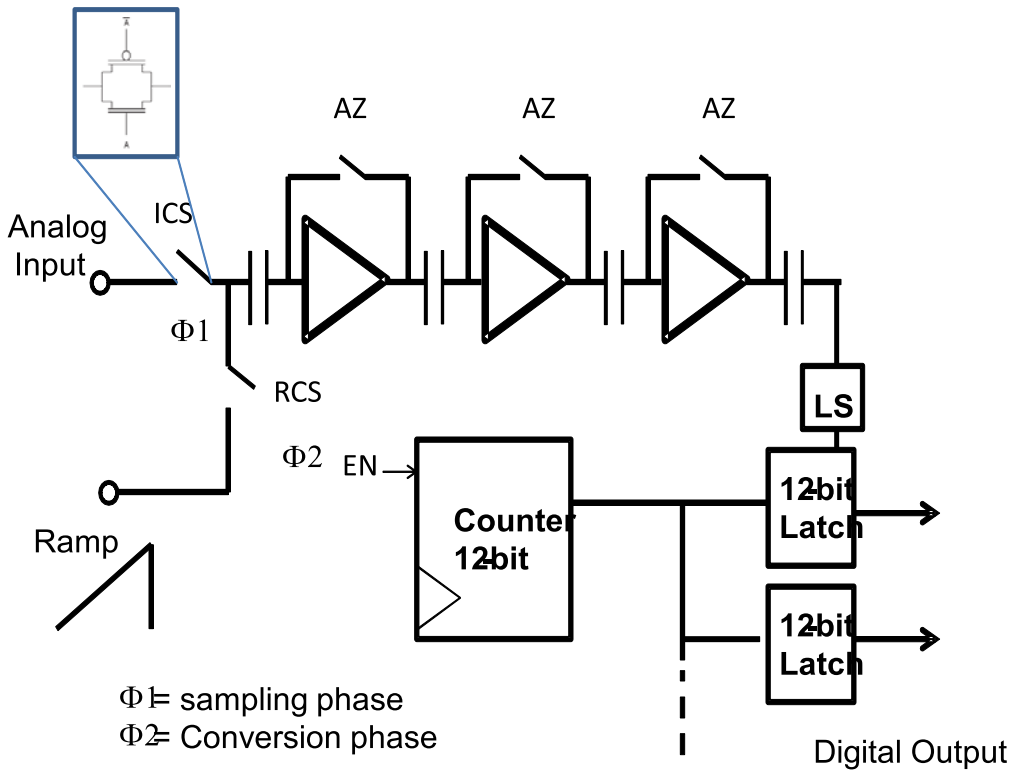

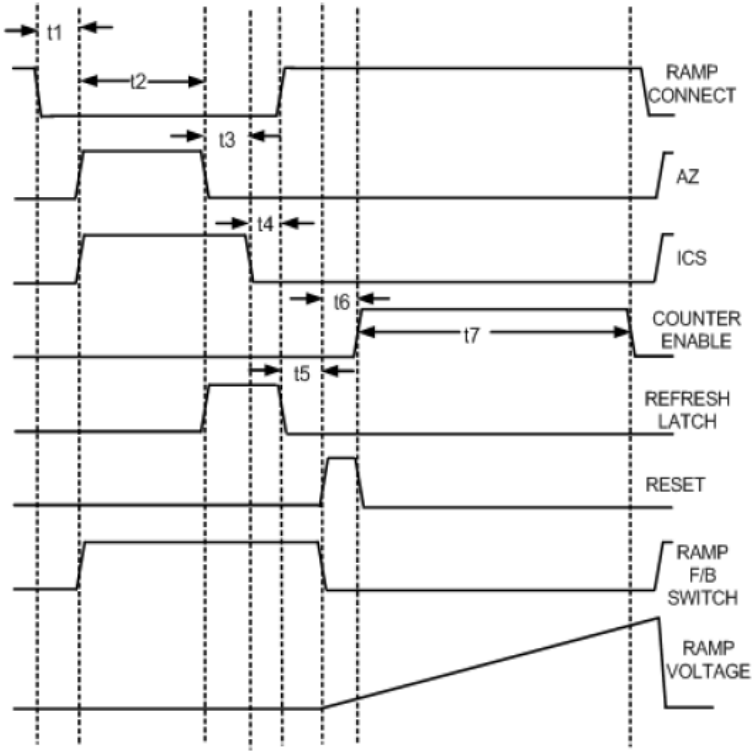

Wilkinson ADC uses a single-slope converter with two non-overlapping clock phases (sampling and conversion)

SET-UP

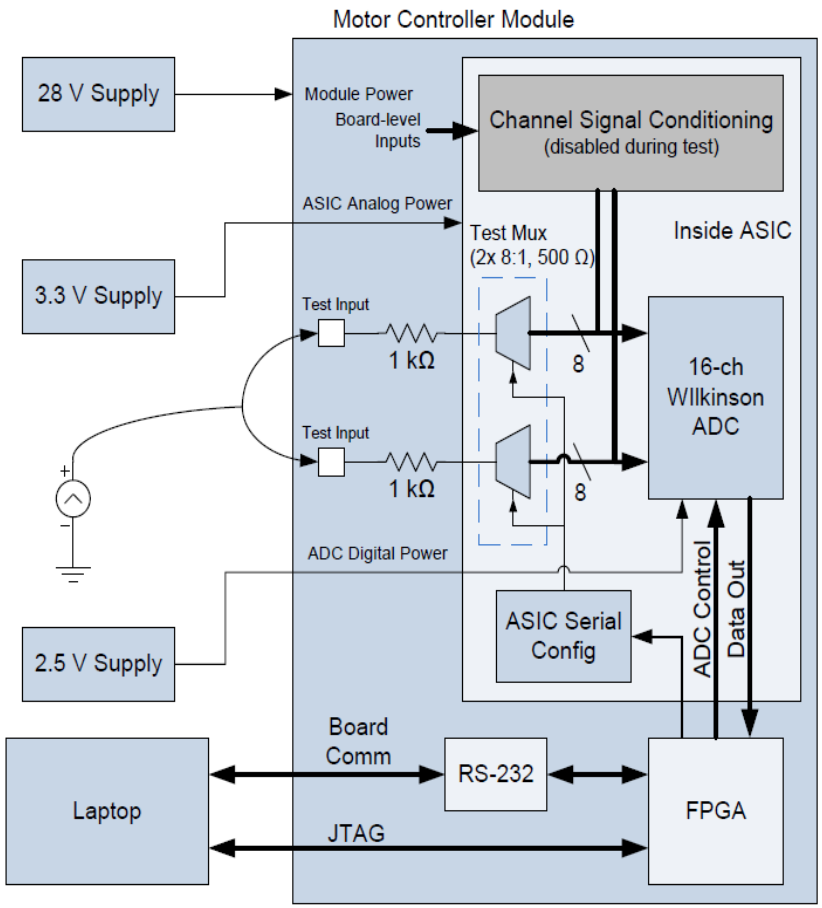

- Single Event Effects performed at Texas A&M
  - 15 MeV ions cocktail
- SEE pulsed Laser at JPL
  - Single photon “ps”
- ADC tested dynamically
- Various input channel configurations

Wilkinson ADC tested in application configurations

Radiation Highlights

- Total Dose (predicted)

Parameter	Pre-rad	100 krad proton	300 krad proton	300 krad X-ray
DNL	< 0.5 LSB	< 0.5 LSB	< 0.5 LSB	< 0.5 LSB
SNR (dB)	60.8877	31.3268	61.8915	60.7922

- Single Event Destructive (None)

  - LET of 85.4 MeV.cm^2/mg @125°C, up to 2×10^7 p/cm^2 and10% overvoltage (3.6 V instead of 3.3 V).

- Single Event Effects

  – SEU at the ADC output ???

Wilkinson ADC rad-response acceptable

Radiation Highlights

- Total Dose (predicted)

Parameter	Pre-rad	100 krad proton	300 krad proton	300 krad X-ray
DNL	< 0.5 LSB	< 0.5 LSB	< 0.5 LSB	< 0.5 LSB
SNR (dB)	60.8877	31.3268	61.8915	60.7922

- Single Event Destructive (None)

  - LET of 85.4 MeV.cm^2/mg @125°C, up to 2×10^7 p/cm^2 and10% overvoltage (3.6 V instead of 3.3 V).

- Single Event Effects
  – SEU at the ADC output ???

National Aeronautics
and Space Administration

Heavy ion

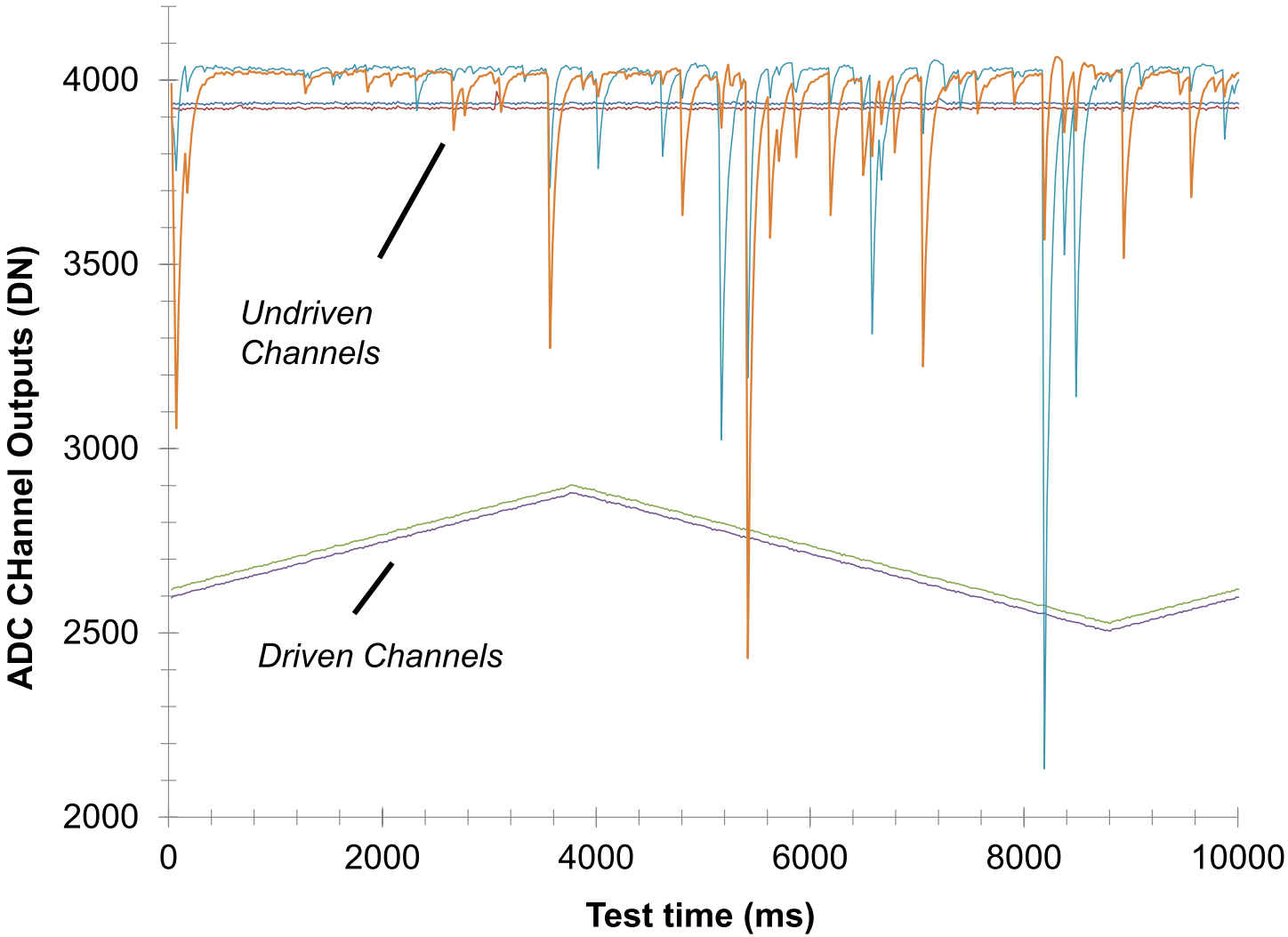

Typical heavy ion runs obtained with Kr (~27.8 MeV.cm^2/mg)

Results

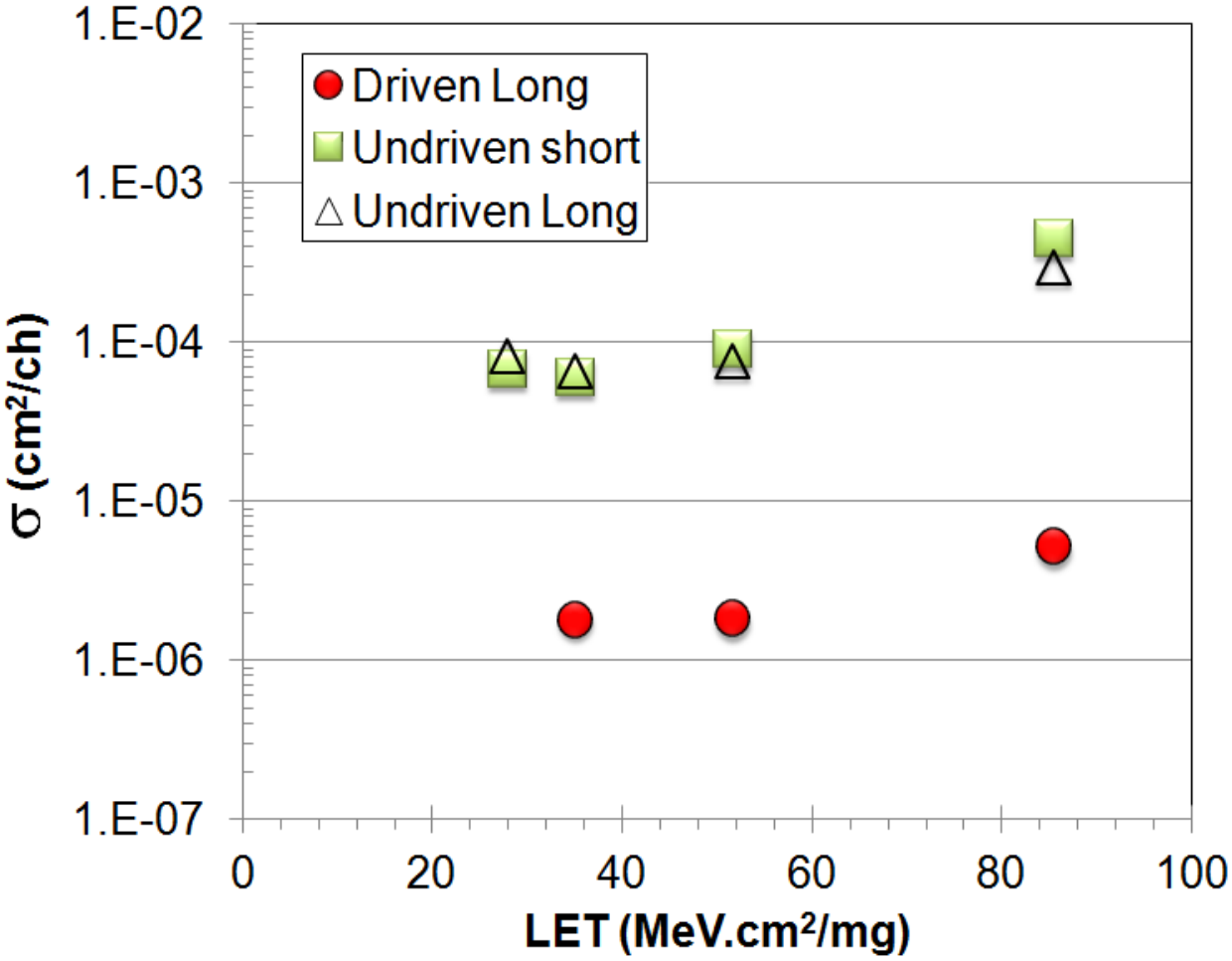
1.E-02
1.E-03
1.E-04
1.E-05
1.E-06
1.E-07
σ (cm²/ch)
0
20
40
60
80
100
LET (MeV.cm²/mg)
Driven Long
Undriven short
Undriven Long

National Aeronautics
and Space Administration

Laser Verification

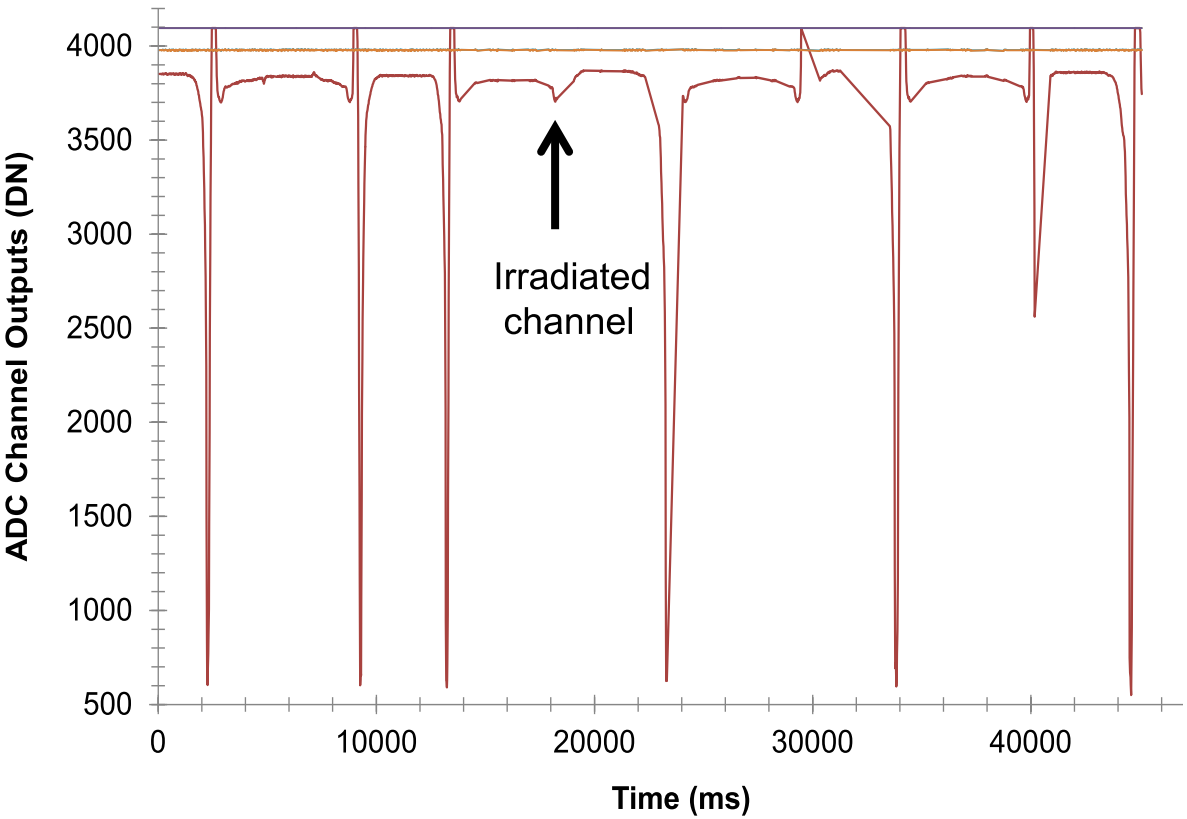

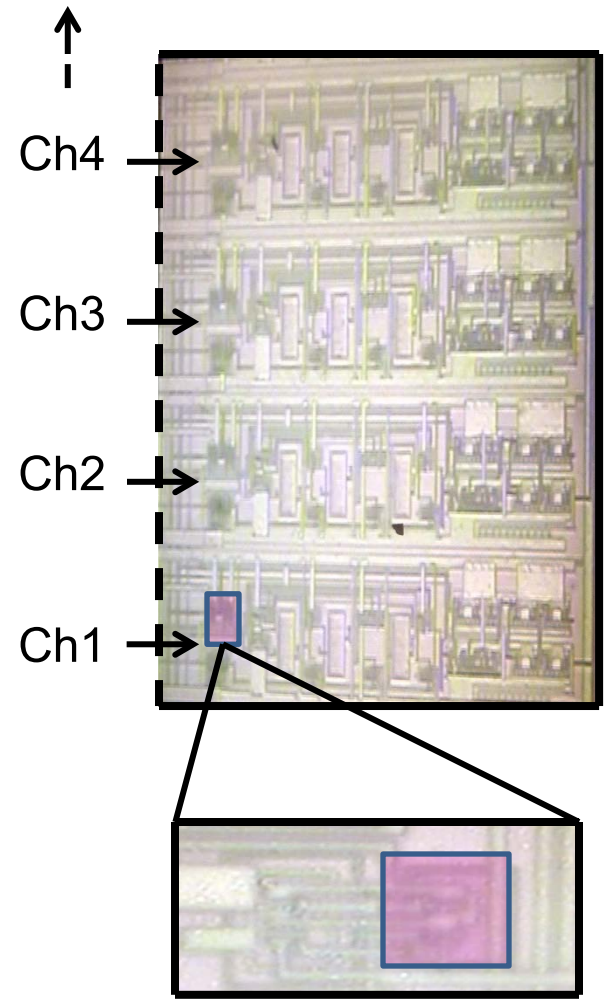

Laser energy 55pJ
Pulse rate (~1s)
Good correlation with Heavy Ion

Sensitive transistor
PMOS of Transmission gate

National Aeronautics
and Space Administration

Simulation

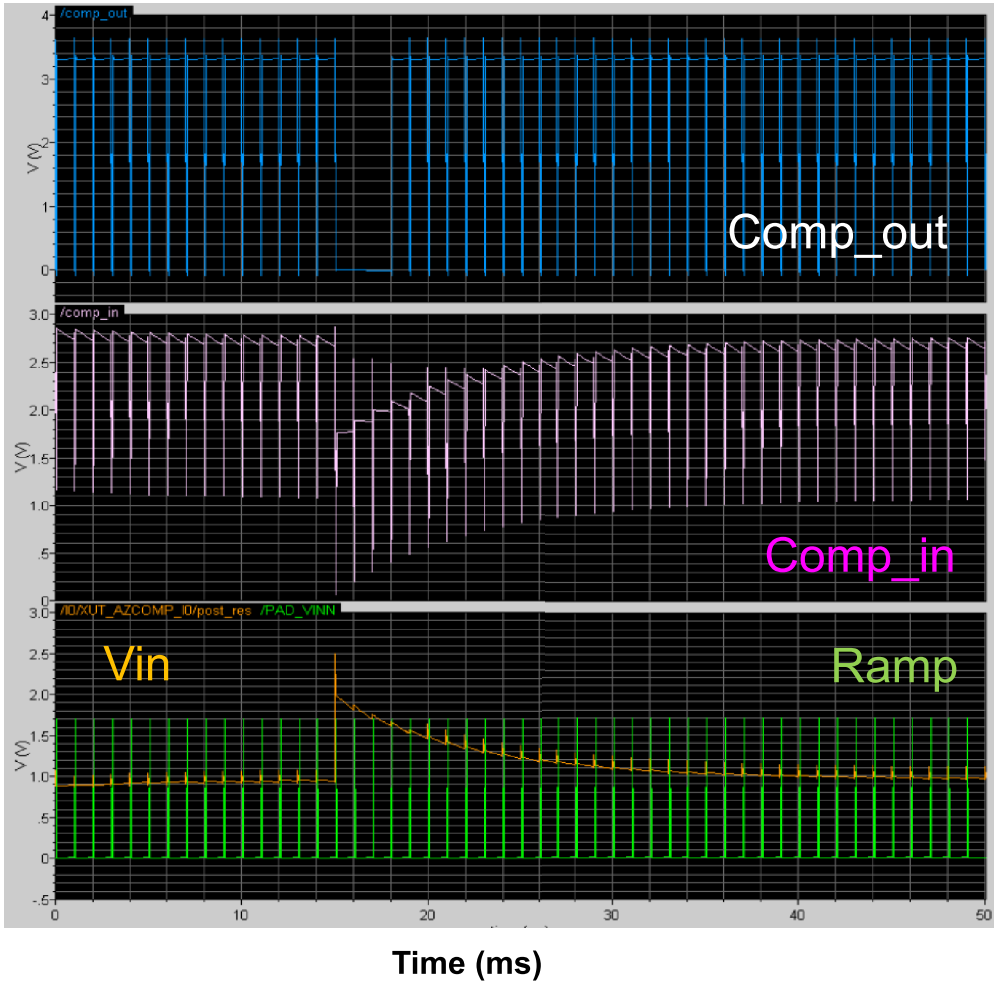

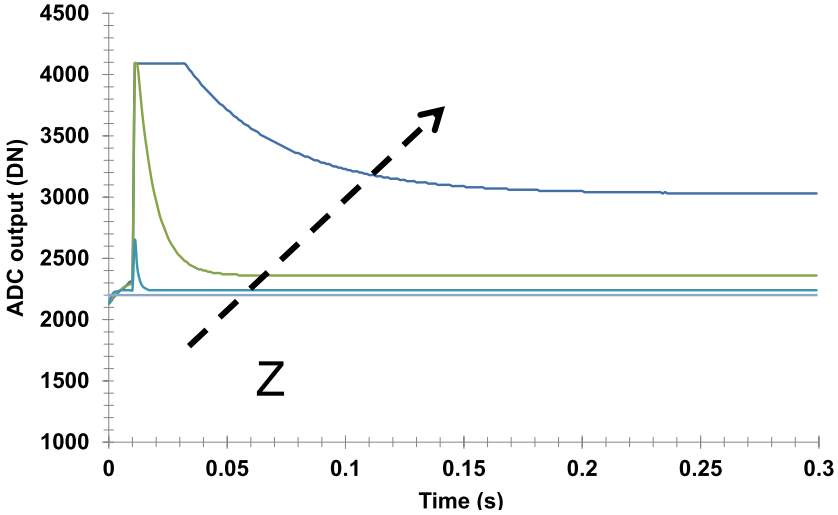

Mixed signal simulation using verilog/transistor level

Studied the impact on input impedance (Z)

Hit on transmission gate (PMOS transistor) for various Z

Conclusion

To be added