The Lunar Laser OCTL Terminal (LLOT)

Abhijit Biswas*, Joseph M. Kovalik
Jet Propulsion Laboratory, California Institute of Technology, 4800 Oak Grove Drive, Pasadena, CA, USA 91109

ABSTRACT

The NASA owned Optical Communication Telescope Laboratory (OCTL) telescope located at Table Mountain, CA is being readied as a backup ground station for the upcoming Lunar Laser Communications Demonstration (LLCD). The backup ground terminal is called the Lunar Laser OCTL Terminal (LLOT). The 1-m diameter telescope will be configured as a mono-static transceiver for transmitting a laser beacon and receiving downlink at a data-rate of 39 Mb/s. Interfaces to an operations center with near-real time exchange of monitored data at OCTL will also be developed. A system level overview of this backup ground station for LLCD will be presented.

Keywords: Laser communication, multi-beam beacon, photon-counting receiver; lunar

1. INTRODUCTION

The Lunar Laser Communication Demonstration[1] (LLCD) managed by the National Aeronautics Space Administration (NASA) Goddard Space Flight Center (GSFC) and implemented by the Lincoln Laboratories, Massachusetts Institute of Technology (LL-MIT) is planned for the fall of 2013. Covering lunar distances of approximately 400000 km it will be an order of magnitude farther than any previous bi-directional free-space laser communication demonstration. The Optical Communication Telescope Laboratory (OCTL) telescope located at Table Mountain, CA and operated by the Jet Propulsion Laboratory (JPL) for NASA is being readied as a backup ground station called the Lunar Laser OCTL Terminal (LLOT). Figure 1 shows an operational view for the LLCD with the primary ground station, the Lunar Lasercom Ground terminal (LLGT) located at White Sands, NM and the backup LLOT at Table Mountain, CA. The Europeans Space Agency (ESA) is also planning to support LLCD with another backup terminal at Tenerife, Canary Islands.

LLOT will receive downlink from the Lunar Lasercom Space Terminal (LLST) on-board the Lunar Atmospheric Dust Environment Explorer (LADEE) spacecraft at 39 Mb/s. Downlink from the LLST to the LLGT will be at much higher rates (maximum 622 Mb/s).

In order to support the link from LLOT a 1558 nm laser beacon is transmitted from the OCTL telescope to the LLST. The LLST uses an acquisition and tracking detector to acquire the beacon and return a 1550 nm downlink laser. The downlink is spatially acquired at the OCTL telescope and subsequently brought to incidence upon a communications receiver to complete the link. The LLOT communication receiver is operated by first recording the received signal and then performing post-processing after the pass to synchronize and decode the received code-words. Note that downlink will be received with a free-running LLST clock, since the uplink required to lock the clock will not be implemented at OCTL. Concurrent processing of the recorded signal is performed to verify that LLCD signal is being recorded. Link diagnostics extracted through concurrent processing together with locally monitored parameters are returned to the Lunar Lasercom Operations Center (LLOC) in near real-time (see Section 5). The decoded code-words received over the downlink will be returned within a day or two of the demonstration. Note that the non-real-time nature of the LLOT receiver was implemented as a cost-effective means of providing backup support.

In the remainder of this paper a system level description of LLOT is presented. Other reports in this volume will provide a more detailed description of the Optical and Laser Beacon Assembly[2] and the Post-Processing Receiver Assembly[3]. In

* abiswas@jpl.nasa.gov; phone 1 818 354-2415; fax 1 818 393-6142;

©2013 California Institute of Technology. Government sponsorship acknowledged

Section 2 below the concept of operations is described. Section 3 presents analysis on the beacon uplink while Section 4 presents analysis on downlink acquisition and communications. Section 5 describes the operational plan for the demonstration including data-exchange with the operations center and local monitor and control followed by conclusions in Section 6.

Figure 1 Operational view of the Lunar Laser Communications Demonstration (LLCD). LLOT at Table Mountain, CA will serve as backup to the primary Lunar Lasercom Ground Terminal (LLGT) at White Sands, NM. The Europeans Space Agency (ESA) is also planning to support LLCD with a terminal at Tenerife, Canary Islands.

2. CONCEPT OF OPERATIONS

Link operations will commence with pointing the OCTL telescope to LLST using LADEE ephemeris knowledge provided by the LLOC. An angular uncertainty diameter of 191 μrad is allocated for position knowledge of the spacecraft based on expected ephemeris and mount pointing errors. To initiate link acquisition a 110 μrad angular diameter ($1/e^2$) ~ 1568 nm beacon laser will be transmitted from OCTL. The telescope will execute a step-stare scan to search out the uncertainty region. A 19-step close-packed hexagonal scan pattern covering a 252 μrad region will take about 100 seconds with a 5 second dwell time per step. The spacecraft pointing control is approximately 3 times the LLST acquisition quadrant sensor field-of-view requiring a scan by LLST of the spacecraft pointing uncertainty region. The LLST scan time of < 5 sec and was used to set the 5 sec dwell time for the OCTL beacon scan.

Link acquisition will be initiated when the LLST quadrant detector senses sufficient OCTL beacon power to "pull-in" the ground beacon and return the 1550 nm downlink. Mean beacon irradiance (1568 nm) required at the LLST aperture for this will be ~3.6-nW/m^2. Initially, the downlink from LLST will be "dithered" so that the mean irradiance above the atmosphere at OCTL will be at least 0.17-nW/m^2. The OCTL telescope will spatially acquire the downlink, initially collecting the entire downlink power on the acquisition camera. LLOT will simultaneously correct telescope bias pointing error using the acquired downlink and narrow the transmitted beacon divergence to 40μrad. As a result the mean beacon irradiance at the LLST aperture will be boosted to 36-nW/m^2. With the increased beacon power received by the quadrant sensor on LLST the "tighter" servo loop will effectively narrow the downlink beam-width. The irradiance incident at OCTL above the atmosphere will be at least 1.7- nW/m^2. Once this happens link acquisition will be complete and 90% of the downlink signal power will be directed to the communication receiver at OCTL.

The acquisition sequence is expected to take approximately 100 seconds and the communication link duration for a single pass will be approximately 15 minutes. Interruptions to beacon transmission from OCTL, exceeding 1 second, due to regulatory agency (Federal Aviation Administration, FAA and United States Strategic Command Laser Clearing House, LCH) restrictions will result in the LLST returning to a scanning mode. During such interruptions the OCTL telescope will continue to track the LADEE spacecraft using observed offsets and ephemeris. Depending on the duration of an interruption, the OCTL step-stare-scan will be bypassed so that shorter re-acquisition times are achieved. During acquisition in addition to the received downlink optical signals, the LLST quadrant detector status will be telemetered over an RF link and relayed to OCTL through the LLOC. This information will serve as an aid to acquisition.

OCTL telescope pointing to LLST will factor in the point-ahead angle while a separate fast steering mirror in the receive path of the LLOT will be used to point-behind the received downlink on the acquisition and communication detector integrated to the OCTL telescope.

OCTL will be readied to support day and night LLCD link operations under clear sky conditions. The minimum Sun-Earth-Probe (SEP) angle of 10° for daytime operations was selected to avoid any modifications to the telescope. The telescope is required to operate at a minimum elevation angle of 20 degrees.

Table Mountain, CA where the OCTL telescope is located has had an ongoing program for gathering atmospheric and weather data for a number of years[4]. These statistics were used to derive "best", "nominal" and "worst" conditions for attenuation, sky-radiance and atmospheric turbulence. These correspond to 10th, 50th, and 90th percentile conditions measured using cumulative site statistics. Table 1 below summarizes these conditions

Table 1 Summary of the atmospheric conditions for operating the LLCD link with the OCTL ground station

		Day			Night		
		Best	Nominal	Worst	Best	Nominal	Worst
r0 at zenith @ 500 nm		8.3	5.4	3.6	11.4	7.5	5
Atmsophere Attn. at zenith (dB)		0.1	0.18	0.25	0.1	0.18	0.25
Sky Radiance for presumed SEP and Observation angle combination (W/cm^2/sr/mm)	SEP (deg)	50	20	10	>100	>100	>100
	Obs. ZA (deg)	55	70	70	55	70	70
		2.00E-04	2.28E-03	1.00E-02	0.00E+00	0.00E+00	0.00E+00

3. LASER BEACON ANALYSIS

OCTL will be required to transmit a beacon laser that satisfies the mean irradiances mentioned above with the wide (110μrad) and narrow (40μrad) beams. The link analysis for achieving this is summarized in Table 2.

Table 2 Summary of 1568 nm beacon laser budget

	Wide Beacon Worst Value (dB)		Derived or Intermediate calculation		Narrow Beacon Worst Value (dB)		Derived or Intermediate calculation	
Transmitter laser average power	13.01	dB-W	20	W	13.01	dB-W	20	W
Telescope Losses	-3.3	dB			-3.30	dB		
Ideal Aperture Gain [Divergence]	94.6	dB	106	μrad	103	dB	40	μrad
Tx Modulation loss [Duty Cycle]	-3.00	dB	50	%	-3.00	dB	50	%
Array Gain {# of Beams]	7.78	dB	6	beams	7.78	dB	6	beams
Loss due to beacon power allocation	0				0	dB		
Strehl due to wide beam	0				0	dB		
Additional Strehl due to turbulence [r0]	-0.69	dB	[3.6]	cm	-3.44	dB	[3.6]	cm
Avg pointing loss (bias and jitter)	-3.23	dB	35	μrad	-0.98	dB	10	μrad
Atmos Attenuation	-1.33	dB			-1.33	dB	70	deg
Space Loss	-310.3	dB	406850	km	-310.15	dB	406850	km
Iradiance at LLST			11.6	nW/m^2			73.74	nW/m^2
Required Irradiance at LLST			3.6	nW/m^2			36.00	nW/m^2
Margin	5.06	dB			3.11	dB		

Worst case atmospheric conditions, maximum range and minimum elevation angle (maximum air-mass) are presumed in deriving the budget presented in Table 2 and margins of 5 and 3 dB are shown for the wide and narrow beacon.

Atmospheric scintillation induced irradiance fluctuations will be mitigated with a multi-beam beacon comprised of 6 co-propagating beams. Averaging of the mutually incoherent beams traversing diverse atmospheric paths prior to combining reduces irradiance fluctuations at the LLST aperture. A wave propagation simulation was carried out in order to evaluate the scintillation reduction

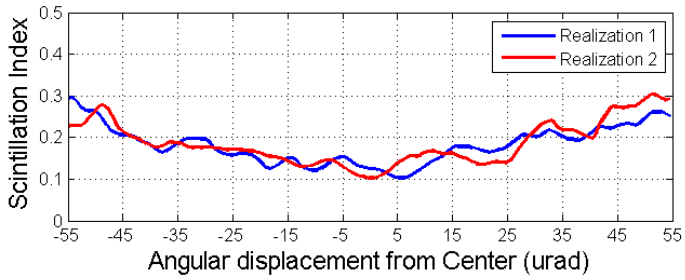

(a)

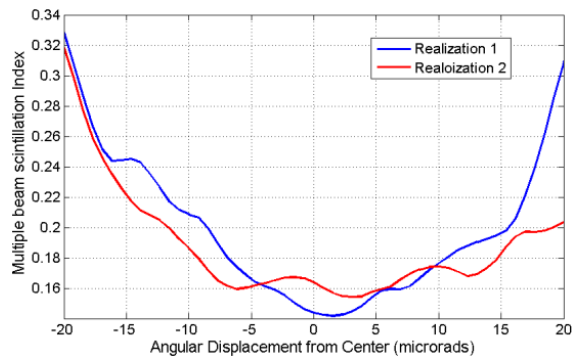

(b)

Figure 2 Effective scintillation index achieved with multi-beaming for (a) 110 µrad and (b) 40 µrad beacon transmitted from OCTL to LLST

Figure 2 shows the spatial distribution of the scintillation reduction predicted by the simulation for the wide and narrow beacon. The pair of plots is for two different realizations of the simulation where an update of 1 millisecond for a total of 5 seconds was used for each realization. Mis-pointing the wider beacon beams by as much as 35 µrad results in doubling of the scintillation index whereas the same effect occurs with a 10 µrad displacement from the beam center of the narrow beacon.

4. DOWNLINK ANALYSIS & DISCUSSION

As described in Section 2 the first downlink received at OCTL is during link acquisition and the irradiance above the atmosphere will be at least 0.17-nW/m^2. With this signal OCTL must be able to acquire the link. An indium gallium arsenide (InGaAs) camera will be used as the acquisition sensor at OCTL. Table 3 shows a budget for the downlink signal and daytime background expected at OCTL

Table 3 Summary of downlink signal and background received on acquisition detector

Power above the atmosphere			-224.89	dB-W
Power [Irradiance] above the atmosphere			1.70E-01	nW/m2
Atmospheric Loss [Zenith Angle]	-1.33	dB	70	deg
GROUND RECEIVER				
Receiver Gain (dB) [Diameter]	125.96	dB	1	m
Receiver Efficiency	-0.10	dB		
Receiver Optical Loss	-4.1	dB		
Signal Power on Pntg. Detector	-104.5	dB-W		
Incident dB-ph/s			84.5	dB-ph/s
Incident Photon Flux (ph/s)			2.80E+08	ph/s
MARGINS & OTHER LOSSES				
Signal Margin	-3	dB		
Mean Photon Flux			1.40E+08	ph/s

SEP	10	deg
Sky Radiance	1.00E-02	W/cm^2/sr/mm
Stray Light Radiance	1.70E-03	W/cm^2/sr/mm
Moon radiance	2.42E-03	W/cm^2/sr/mm
r0 @ Zenith (500 nm)	3.6	cm
Instantaneous FOV	4	mrad
Sky-Rad Power per pixel	4.69E-13	W
Stray Lgiht Flux per pixel	7.97E-14	W
Moon Radiance Flux per pixel	1.13E-13	W
Dark Count Flux	4000	pe/pix/s
Read Noise	50	pe/pix/s
Spot Size	100	pixels
Mean Background Photon Flux	5.18E+06	ph/s

With 3-dB margin on signal photon flux (half the predicted signal) and a 6-dB margin on background photon flux (4-times more background flux than predicted by the sky radiance and stray light models), it can be shown that acquisition with a high probability of detection and low probability of false alarm can be achieved as shown in Figure 3 below.

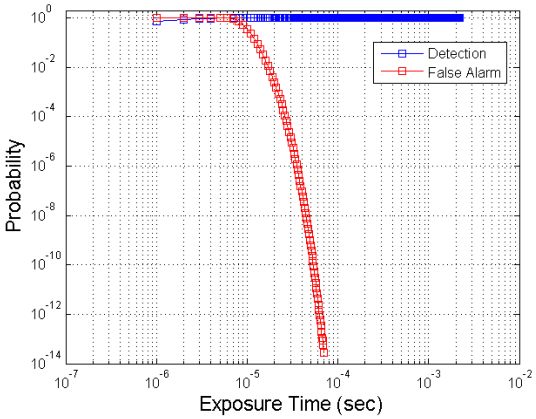

Figure 3 Probability of detection (blue) and false alarm(red) as a function of camera exposure time that is proportional to increasing photon-flux (signal + background) on the detector. A 10 x 10 pixel spot size enclosing 70% of the signal energy was assumed along with a threshold that is 75% of the peak signal energy.

System level tests to verify the sky radiance and stray light background models have been performed with the OCTL telescope pointed at varying SEP angles (minimum of 10°) at different times of day and similar tests are ongoing. Background levels predicted under nominal model conditions have been verified, whereas background levels shown in Table 3 corresponding to worst model predictions that have not been encountered yet during testing. Detection of the signal power of ~ 17 pW on the InGaAs camera has also been verified separately by transmitting a 1550 nm laser from the tip of a single mode fiber located 2 km away from the telescope pointed horizontally across the valley. In these tests 9pW of power could be detected, in the presence of representative daytime backgrounds, with sufficient signal-to-noise ratio on the camera to allow centroid estimation with sufficient accuracy to correct bias pointing errors of the telescope. Based on the analysis and tests summarized above link acquisition from LLST will be robust.

Once initial signal acquisition is completed and the downlink signal is utilized to correct the pointing bias error of the telescope and the beacon is narrowed the downlink signal will increase tenfold to, at least 1.7-nW/m^2. With this power level only 10% of the signal power will be used by the acquisition camera for closed-loop tracking, whereas 90% of the signal power will be directed to the communication detector.

Extensive trades were performed prior to selecting a suitable detector as the front-end for the Receiver. Experience with InGaAs intensified photodiodes[5] (IPD) indicated a high probability of pre-mature failure due to breakdown when applying high voltages and also severe after-pulsing at the LLOT operational photon flux rates. Tests with traditional photo-multiplier tubes (PMT) such as Hamamatsu Model H10330A-75 also indicated increased "after-pulsing" with increasing flux levels. A possible work-around explored with PMTs was spreading the signal over multiple devices but our tests indicated requiring 8-10 devices which are impractical from a cost and implementation standpoint. We are continuing to explore PMT testing with other devices to confirm our findings. Tests with linear avalanche photodiodes[6] (APDs) confirmed that analytical prediction that the sensitivity will be inadequate given the high thermal noise and modest gain with conventional linear mode InGaAs avalanche photodiodes. Finally, tests have been completed with tungsten silicide[7] (WSi) superconducting nanowire photon-counting arrays in the laboratory. While test and development of these devices is ongoing at the time of writing this paper link closure with nominal background levels and representative LLCD signal levels was demonstrated in the laboratory. Table 4 shows a high-level link conservative link summary that indicates closure of the 39 Mb/s link with a minimum detection efficiency of 28%. In laboratory tests link closure with ~ 5 dB less photon flux and nominal background was demonstrated. At the time of writing this paper cryo-engineering developments needed to deploy the WSi detectors at OCTL are being pursued. As a backup a single PMT at OCTL for signal acquisition and extracting slot-clock rates with concurrent processing during the pass is also planned.

Table 4 Summary of Downlink Communication budget at 39 Mb/s

Minimum Irrad Above Atmosphere			1.66	nW/m^2
Minimum Sig Pwr	-215.0	dB-W		
Worst Case Atmospheric Loss	-1.3	dB	El Angle =20°	
Net Ground Collector Gain for Data Channel	120.6	dB		
Fiber Coupling Loss	-2.5	dB		
Sig Pwr On Detector	-98.2	dB-W	1	Gph/s
Blking, Jitter and other Detector Losses	-5.1	dB		
Impl. Losses including code gap to capacity	-3.6	dB		
Link Margin	-3	dB		
Bckgnd Photon Flux on Detector			169	Mph/s
Detection Efficiency Reqd.	-5.5		28	%

5. OPERATIONAL PLAN

5.1 Operational Control System

The OCTL telescope uses a real time operating system for controlling all telescope functions including pointing. The real time computer has a Reflective Memory Interface (RMI) that allows external read-write access to the memory at the full clock rate of the processor. An external computer uses this interface to initiate the step stare acquisition process and then command the telescope during closed loop tracking.

The InGaAs acquisition camera (Section 4) records the downlink laser signal and provides an error signal to a fine steering mirror to lock the received light on the data detector. The offset on the fine steering mirror is offloaded by moving the telescope azimuth and elevation in a nested servo loop configuration. This process is controlled by a real time processor inside a PXI system that also has the necessary hardware interfaces.

A separate computer (LLOT Controller) controls and interfaces to the PXI system and the Laser/Optics Controller. The Laser/Optics controller controls and monitors the 6 uplink beacon lasers. It also sets the uplink beam divergence zoom and the split ratio between the detector and InGaAs camera of the variable beam-splitter. A schematic description is represented in Figure 4.

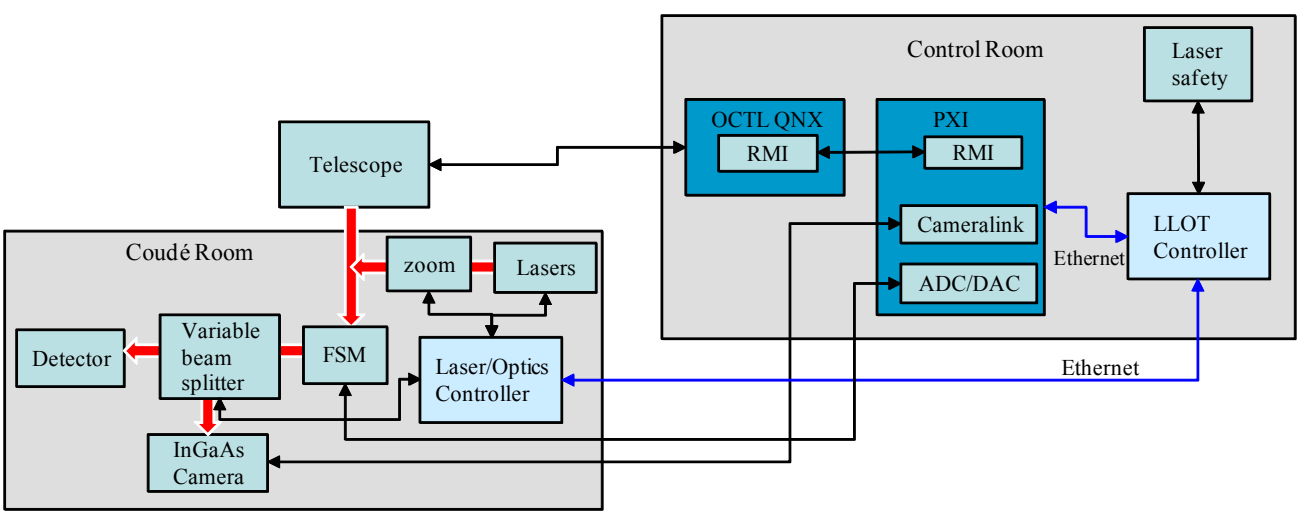

Figure 4 Block diagram of overall telescope control system.

5.2 Laser Safety

Since the LLOT beacon lasers are not eye-safe, a safety system must monitor the sky for any aircraft that otherwise may inadvertently be intercepted. A long wave infrared camera and a narrow beam radar transceiver that are co aligned with the telescope optical axis detects any aircraft before it can intersect the transmitted laser beams and shutters the laser. The LCH will be informed of any laser transmission into space with the registered LLOT beacon and provides time windows when laser transmission must be shuttered. A separate computer program monitors both the aircraft and LCH interception status and enforces any transmission interruptions.

5.3 Ground Station Monitoring

The LLOT will collect and monitor real time performance data that is relayed to the LLOC. Most data will be collected at rates up to a few hertz (Hz) and will relay system operational parameters like telescope pointing, laser performance, alarms and flags. Since the optical downlink telemetry is stored and post processed, the only real time information related to data quality will be a frame detection flag, slot frequency and estimated signal and background counts. A 1 kHz data stream of received laser intensity will also be monitored.

The LLOT controller interfaces with the various assemblies and stores the data locally. Down-sampled data is packaged into Consultative Committee for Space Data Systems (CCSDS) format packets. The packets are further combined into CCSDS frames and then relayed to a separate server running the Integrated Test and Operations System (ITOS) software. The frames are then forwarded via a NASA Integrated Services Network (NISN) connection to the LLOC. Data rates of 94 Kb/s resulting in an accumulated data volume of 11Mbytes over a 15 minute pass will be transmitted to LLOC.

Conversely, packets of RF telemetry from the spacecraft are relayed through LLOC to LLOT in a similar manner. Important parameters such as power received at the spacecraft and receiver electronic temperature will be extracted and distributed to the sub systems. The latter can serve as input parameter to estimate the clock frequency on the spacecraft.

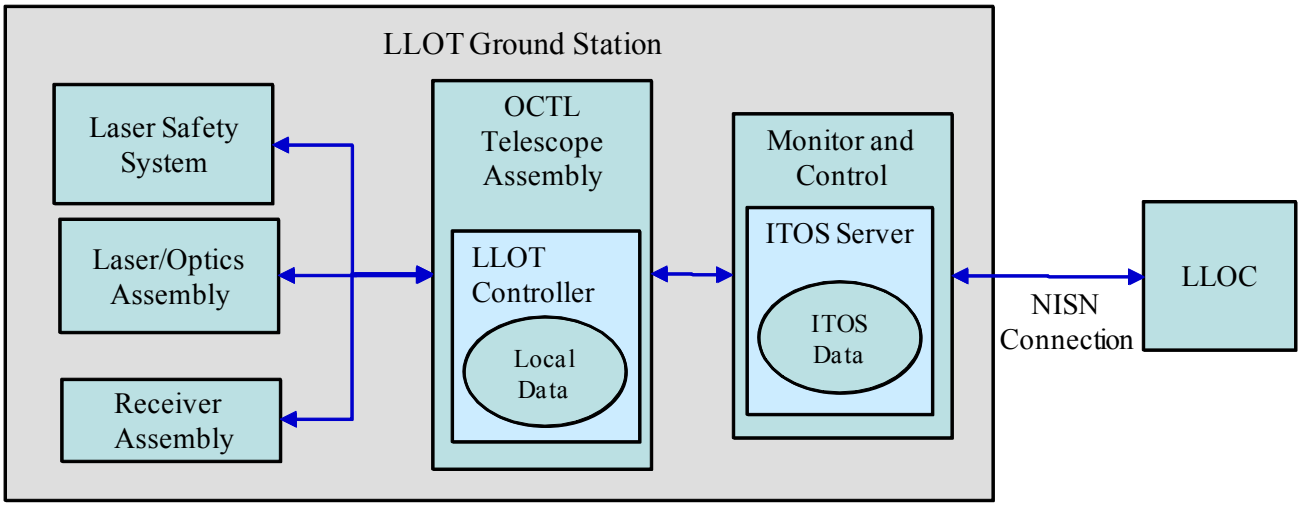

Figure 5 Block diagram of ground station monitoring system.

6. CONCLUSIONS

A summary of the system level design for the LLCD backup ground station, LLOT, utilizing the OCTL telescope was described. LLOT was designed to transmit a multi-beam beacon laser to LLST at lunar distance and receive downlink at 39 Mb/s. LLOT will utilize a software based receiver post-processing receiver but can provide limited real-time link

diagnostics that will ensure that LLCD signal is being received and recorded. Operational control systems planned for supporting the demonstration and local monitor and control being designed and developed are also described.

ACKNOWLEDGEMENTS

The authors acknowledge the able assistance of Dr. S. Piazzolla in performing and providing the analysis for multi-beam scintillation simulations reported in this paper. This work described was carried out at the Jet Propulsion Laboratory (JPL), California Institute of Technology under contract with the National Aeronautics and Space Administration (NASA).

REFERENCES

[1] Bryan S. Robinson, Don Boroson, "LLCD Overview talk," Proc. SPIE 8610, (2013).

[2] W. Thomas Roberts and Malcolm Wright, "Lunar Laser OCTL Terminal (LLOT) Optical Systems," Proc. SPIE 8610, (2013).

[3] Meera Srinivasan, Kevin Birnbaum, Michael Cheng and Kevin Quirk, "A Post-Processing Receiver for the Lunar Laser Communications Demonstration Project," Proc. SPIE 8610, (2013).

[4] Private Communications Dr. Sabino Piazzolla, Optical Communications Group, Jet Propulsion Laboratory, California Institute of Technology.

[5] Ross A. La Rue, Kenneth A. Costello, Gary A. Davis, John P. Edgecombe, and Verle W. Aebi, "Photon Counting II-V Hybrid Photomultipliers Using Transmission Mode Photocathodes," IEEE Transactions on Electron Devices, Vol. 44, No. 4, 672-678, 1997.

[6] H. R. Buris, M.S. Ferraro, C. I. Moore, P. G. Goetz, W. D. Waters, W. R. Clark, W. S. Rabinovich, L. M. Wasiczko, M. R. Suite, R. Mahon, J. L. Murphy, M. F. Stell, W. S. Scharpf, and G. C. Gilbreath, "Large Diameter, High Speed InGaAs Receivers for Free-space Lasercom," Proc. SPIE 6551, Atmospheric Propagation IV [Ed. Cynthia Y. Young], 2007.

[7] Varun Verma, Francesco Marsili, Burm Baek, Adriana Lita, Thomas Gerrits, Jeffrey Stern, Richard Mirin, Sae Woo Nam, "55% System Detection Efficiency with Self-Aligned WSi Superconducting Nanowire Single Photon Detectors," Quantum electronics and Laser Science Conference, QTu1E.5, Optical Society of America technical Digest, 2012.