Advances in Digital Calibration Techniques Enabling Real-time Beamforming SweepSAR Architectures

James P. Hoffman, Dragana Perkovic, Hirad Ghaemi, Steve Horst,Scott Shaffer, Louise Veilleux

Jet Propulsion Laboratory, California Institute of Technology

Pasadena, CA

IEEE Aerospace Conference

Big Sky, Montana

January, 2013

Objectives

- Develop and demonstrate a next-generation digitally calibrated, highly scalable, L-band Transmit/Receive (TR) module to enable a precision beamforming SweepSAR architecture for interferometric radar applications and phase-stable electronically steered arrays.
- Develop technologies to enable real-time on-board beamforming capability for use in phase-stable array antennas:
  - High efficiency L-band TR module.
  - Closed-loop transmit and receive calibration circuitry.
  - On-board real-time digital calibration and beamforming.

- Develop a stable, closed-loop amplitude and phase calibration of TR paths using single tones and chirps.
- Develop digital architecture and algorithms for calibration control and knowledge.
- Integrate the TR module, digital components and algorithms to demonstrate precision calibration.

Background

- Advanced Earth Science Instruments
  - Enabling new radar instrument architectures through demonstrated advances in technology to reduce mission risk and cost
  - A key goal of this NASA funded work is to implement the NRC Decadal Survey for Earth Science and Applications cost effectively.
  - The current efforts are to reduce mission risk for the SweepSAR architecture for the proposed DSI (DESDynI *[Deformation, EcoSystems, Dynamics of Ice]* SAR *[Synthetic Aperture Radar]* Instrument)
  - We are developing real-time DBF (Digital Beamforming) and digital calibration, which are enabling technologies for SweepSAR
  - SweepSAR would enable broad ground coverage, allowing shorter repeat-pass time—significantly improving science return—while dramatically reducing resources, including cost, as compared to a standard phased array system—as determined by the Division reviewed DESDynI Cost Estimates and corroborated by an Independent Cost Estimate (50% cost reduction, 70% mass reduction)

Why SweepSAR?

- **Repeat Period requirement for Deformation science drives the Radar <u>Swath</u>**
  - **For a sub two week Repeat Period, a Swath Width greater than 200km is required**
- **Sensitivity requirement for Biomass (cross-pol) measurement drives <u>Antenna Size</u> and Radar <u>Power</u>**
- **Accuracy requirements for Deformation and Biomass drive Electronics & Mechanical <u>Stability</u> and <u>Calibration</u>**
- **SweepSAR was adopted to achieve much wider swath than conventional SAR strip-mapping, without the performance sacrifices associated with the traditional ScanSAR technique**

Conventional StripMap: <~70km Swath

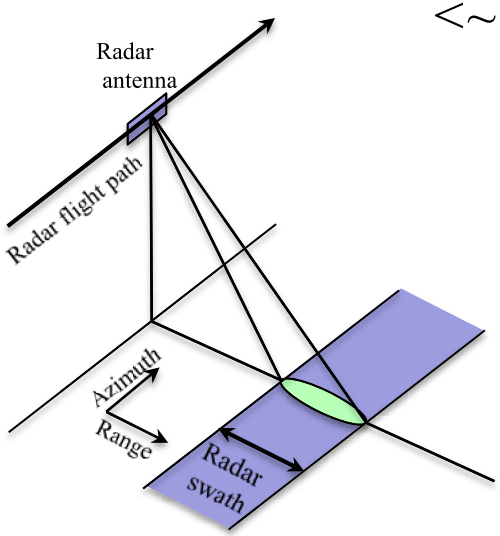

Resulting ~40 day repeat does *NOT* meet Proposed Deformation and Ice Science Requirements

Conventional ScanSAR: non-uniform along-track sampling

Resulting degradation in effective azimuth looks does *NOT* meet Proposed Ecosystem Science Requirements

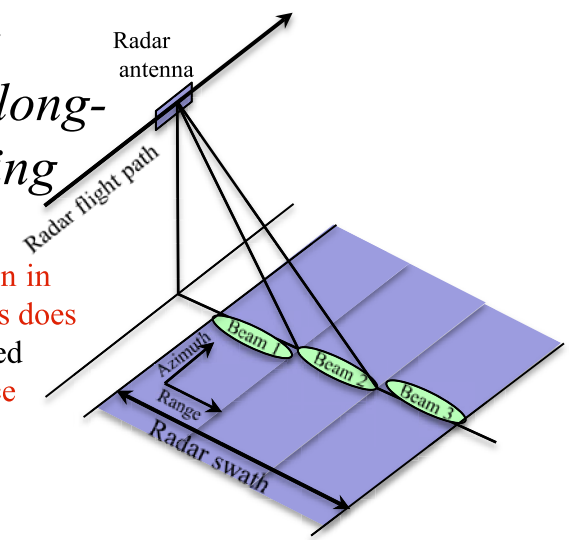

SweepSAR Technique

What is SweepSAR?

- Transmits a pulse over wide beam in elevation
- Receives the echo over narrow beam, tracking echo with scanning receive beam
- Uses multiple *simultaneous* receive beams to track multiple echoes

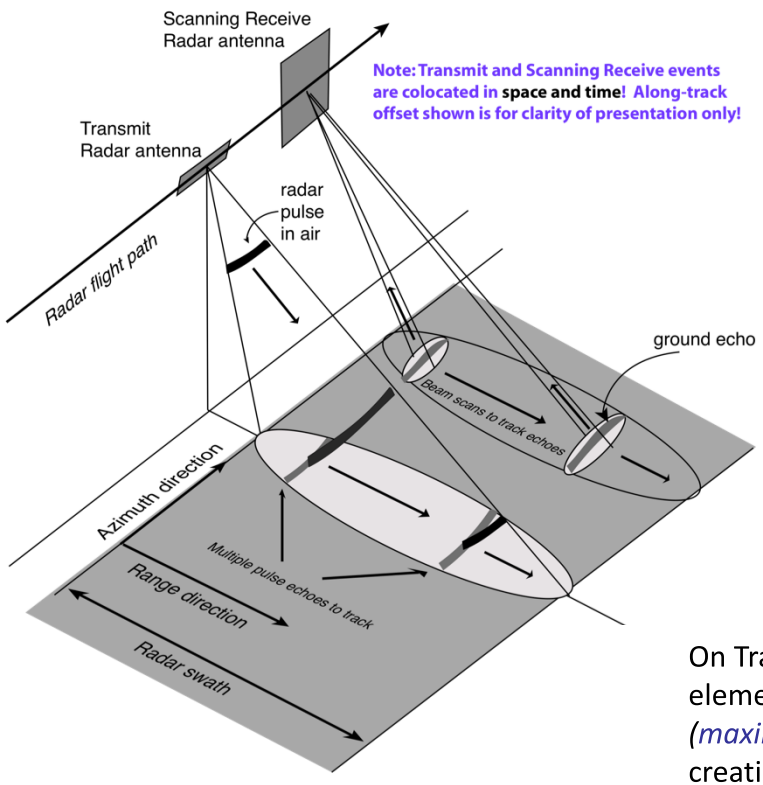

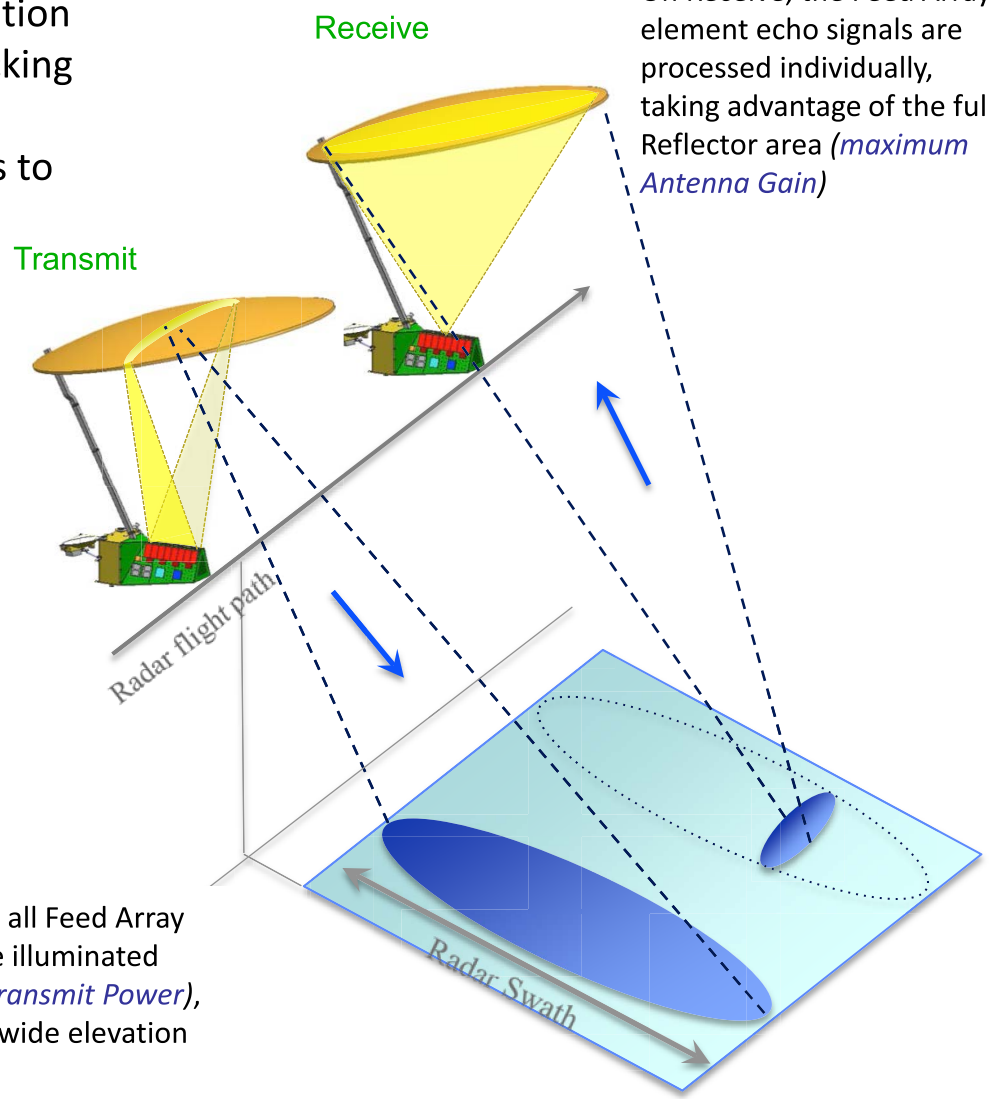

On Receive, the Feed Array element echo signals are processed individually, taking advantage of the full Reflector area (*maximum Antenna Gain*)

On Transmit, all Feed Array elements are illuminated (*maximum Transmit Power*), creating the wide elevation beam

SweepSAR Calibration Modes

- Three calibration modes run in the background while collecting science data
  - Receive Calibration using cal tone (Rx-Cal)
  - Transmit Calibration using chirp (Tx-Chirp)
  - Receive-Only Noise (RON)
    - Noise will be measured at a frequencies out of the transmitted chirp band
- One type will be exercised periodically
  - Bypass Calibration using chirp
- Other types, used for diagnostics, will be exercised on ground command only
  - Receive calibration using chirp (Rx-Chirp)
  - On ground command, data from Tx-Chirp, Rx-Chirp and T/R Bypass will be downlinked for all modules.
    - The ADC sampling time in each FSP can be adjusted by using digital sampling control (either by commanding it from the ground or from the instrument computer).
    - An offset can be applied to the Rx-Cal data if the relative phase between cal tone and chirp drifts (either by commanding it from the ground or from the instrument computer).

*Modes highlighted in red are the technology drivers

High-level Block Diagram of Beamformer/Calibration System

A single channel RF/Digital channel, effectively a single functional block

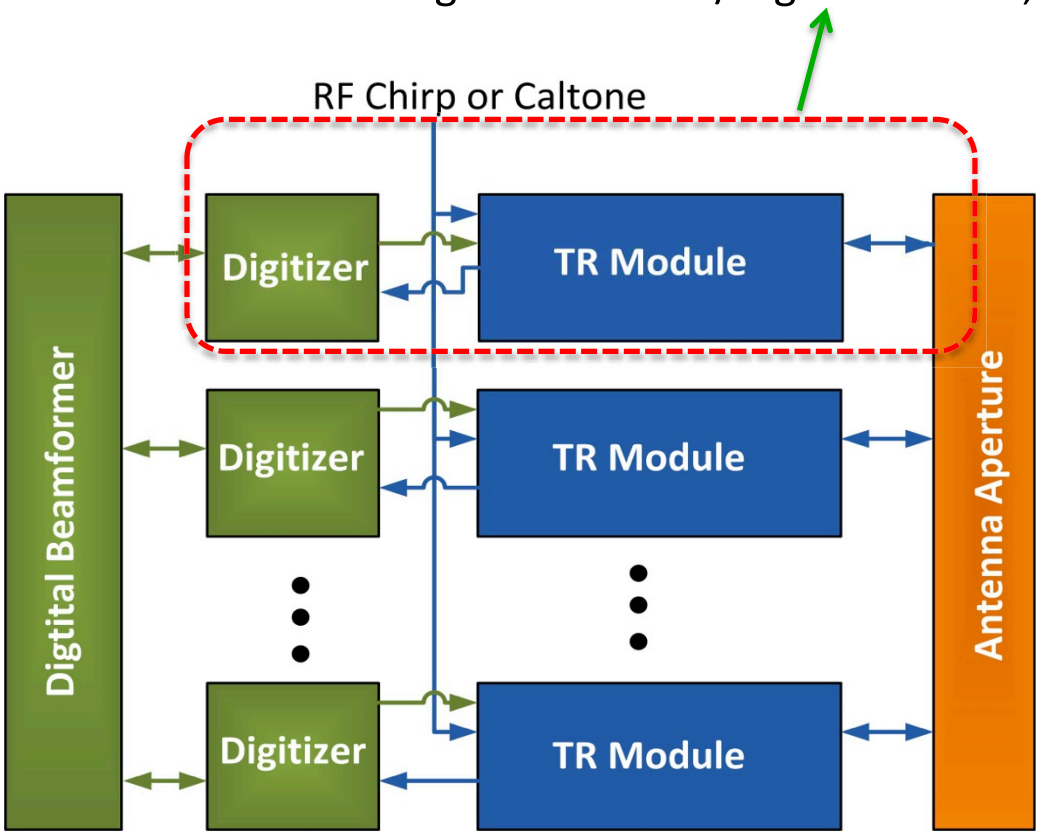

The "Digitizer", called a First Stage Processor for the proposed DESDynI SAR Instrument, both receives the RF signal from the TRM, and controls each TRM's Attenuator and Phase Shifter

The "Digitizer" also contains the algorithms to estimate Amplitude and Phase of the Calibration Signal from the TRM, once digitized

For Transmit: The TRM receives an RF Chirp, which is both Transmitted and coupled to the "Digitizer", where its Amplitude and Phase are estimated

For Receive: The TRM receives a Caltone simultaneously with the radar return. The Caltone is stripped off in the "Digitizer", and its Amplitude and Phase are estimated.

For Bypass Calibration: An RF Chirp or Caltone is routed directly to the "Digitizer" where its Amplitude and Phase are estimated

TR/FSP Hardware

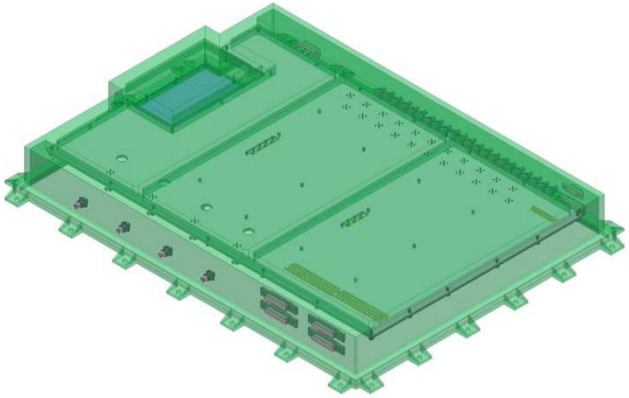

qFSP (quad First Stage Processor)

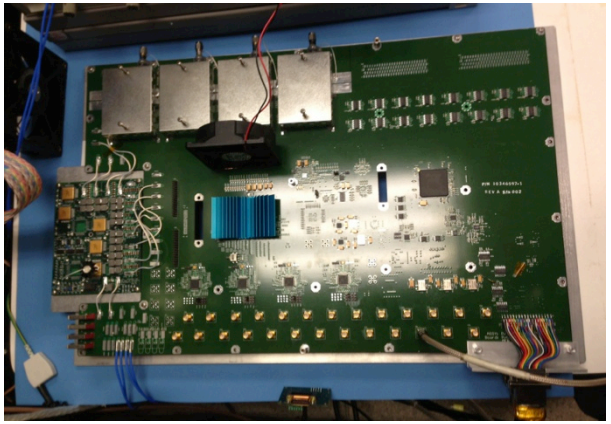

Rather than two channels per V5 FPGA, DSI would be able to fit four channels, significantly reducing cost.

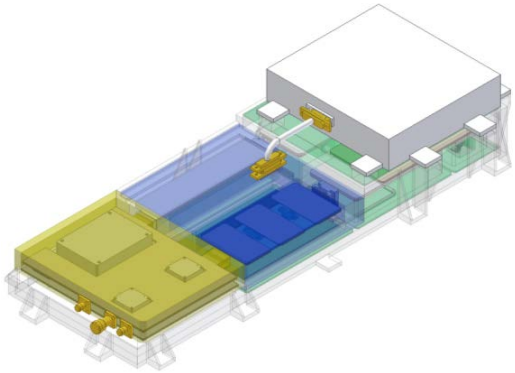

TRM Rev1 (Transmit/Receive Module)

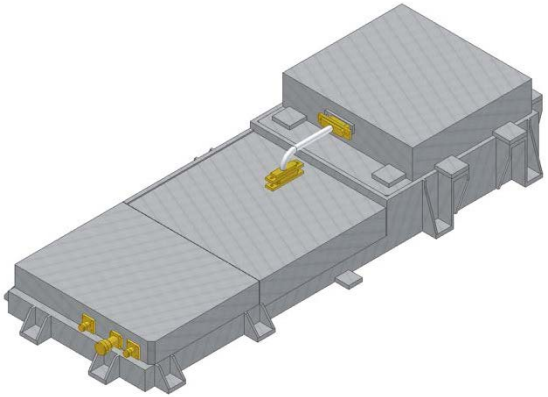

Rev1 has a new calibration circuitry design that takes into account the known "ghosting" issue, and has a significantly improved layout for isolation.

Hardware in the meantime…

DSI Waveform Generator, UpConverter, active 4-way (phase/amplitude) splitter

iFSP (iBoard4, single channel ADC/V5 processor)

iSSP or iSecond Stage Processor (iBoard4, SERDES/V5 processor)

- 4-way splitter performs all of the functions required to test the calibration algorithms in hardware/firmware/software, except for testing the actual characteristics of the TRM itself (such as drift over temperature and isolation.
- Since the proposal, DSI moved to a 4-channel processor and moved some of the processing to the Second Stage Processor—these changes are both out of scope for this ACT, but we are able to meet all milestones for the coming year with the 4-way, iFSP, and iSSP, except the thermal characterization of the TRM (but this will be done in December 2013, as proposed)
- The final year of the ACT requires a fully characterized TRM and multi-channels of FSP—these are all on schedule, with several months margin, by the proposed DSI.

Unique Calibration Concept

Traditional Loopback Calibration

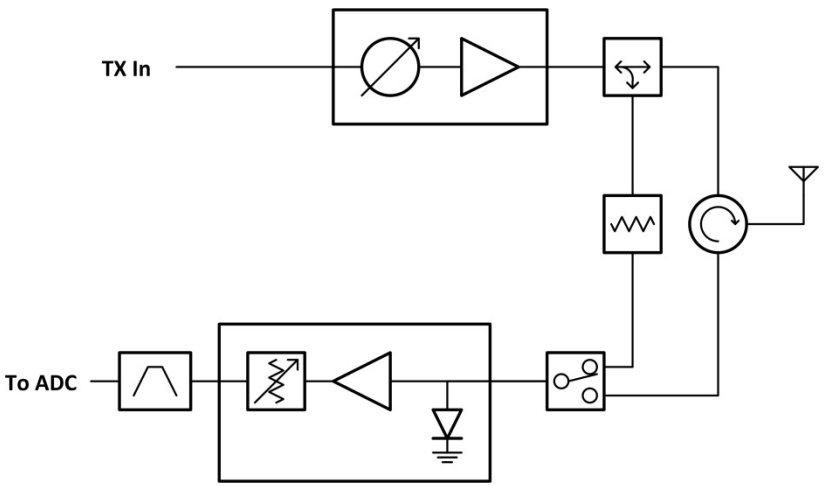

SweepSAR Digital Calibration

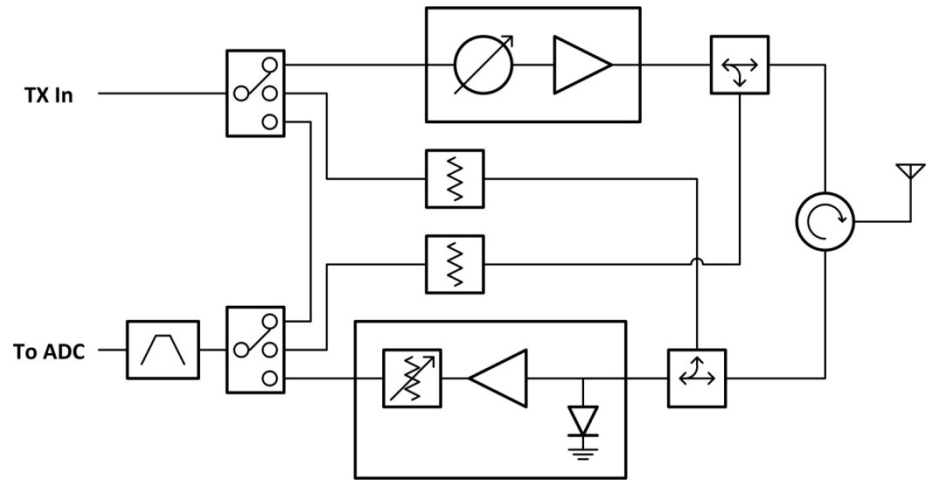

- **Relaxes the isolation requirement between TX and RX**
- **Calibration can be done during actual receive events**
- **Differentiates between TX and RX changes (important for SweepSAR)**
- **Compensates for all changes not just temperature**

Radar Parameters and Mapping Geometry

- **Eight beams map a swath extending from 33.3° -39.5° that gives a swath width of 1.4 km.**

Radar Parameters

Parameter	Value
Wavelength	8 mm
PRF	1300 Hz
Bandwidth	80 MHz
Sampling Frequency	240 MHz
Flight Altitudes	8750 or 10500 m
Transmit Power	250 W

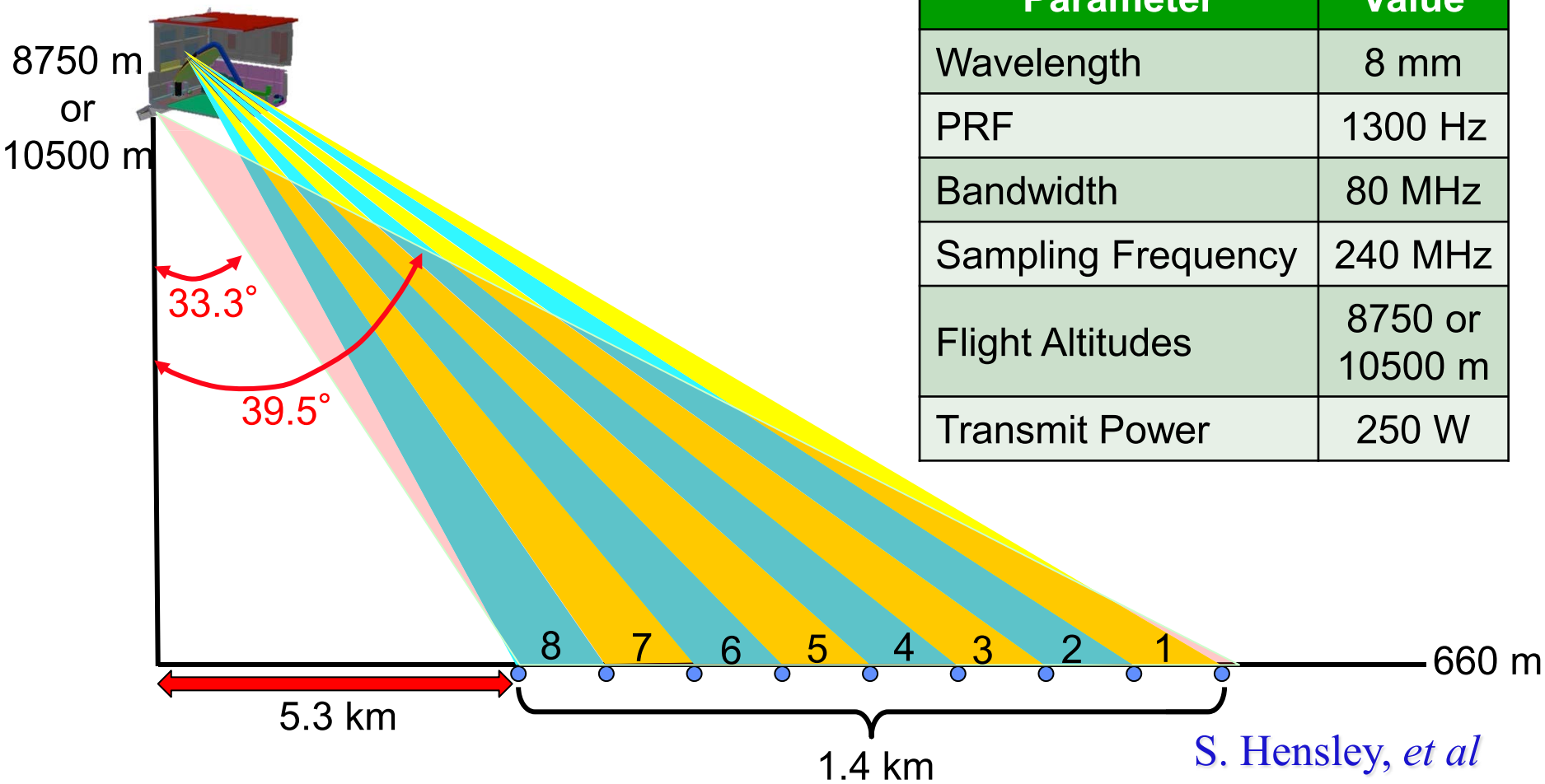

S. Hensley, *et al*

Not drawn to scale

Individual Beam Imagery

S. Hensley, *et al.*

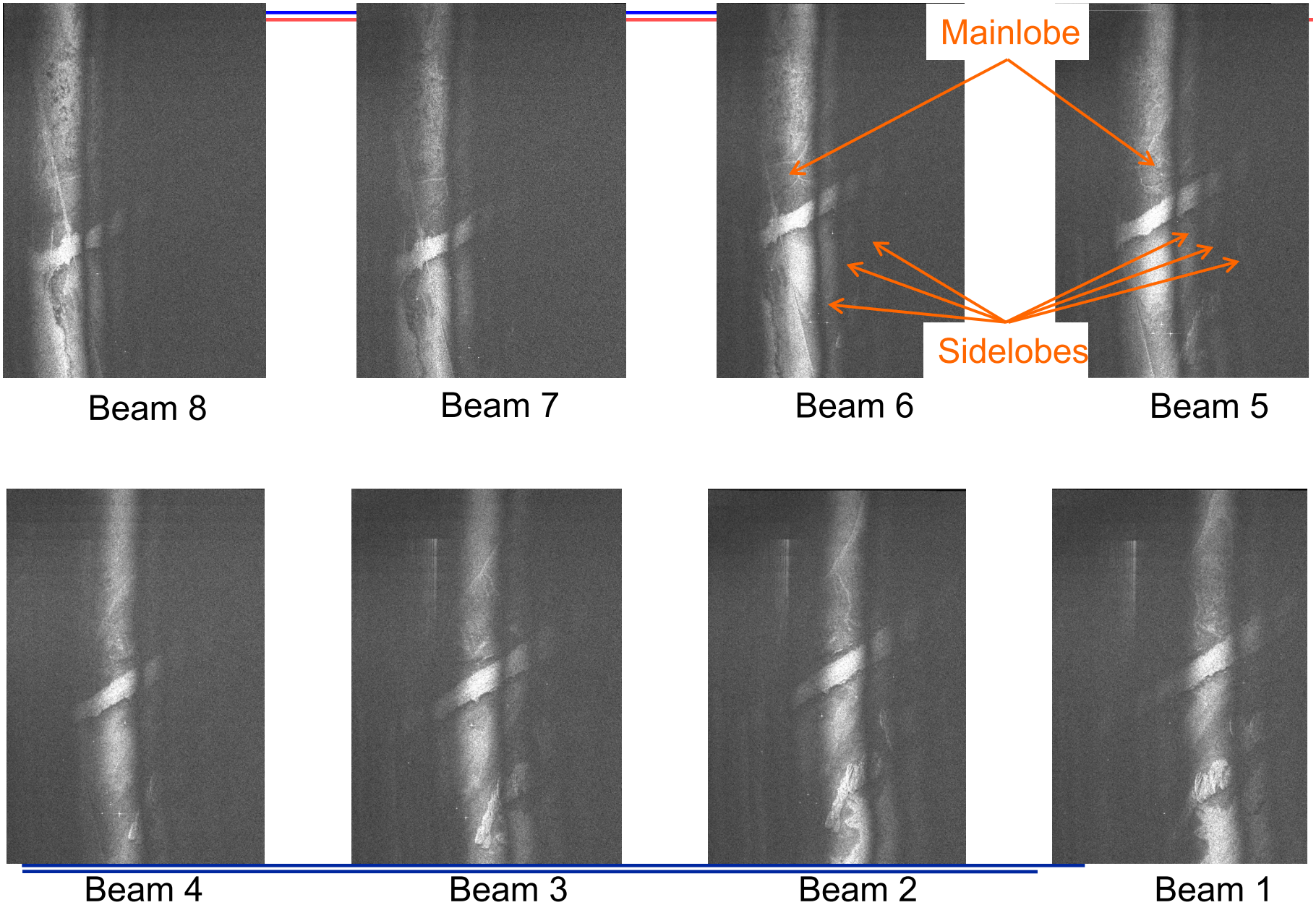

Corner Reflector Image

S. Hensley, *et al.*

- **Simple maximum power combining algorithm used to generate a simple mosaic of the individual beam images.**

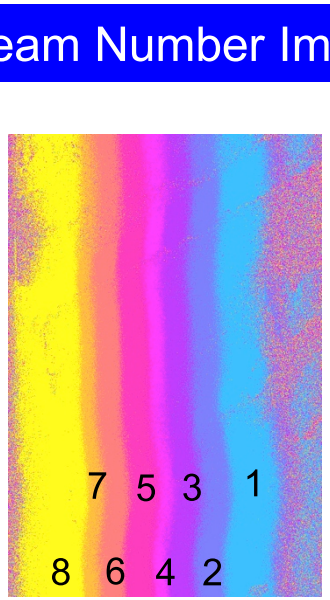

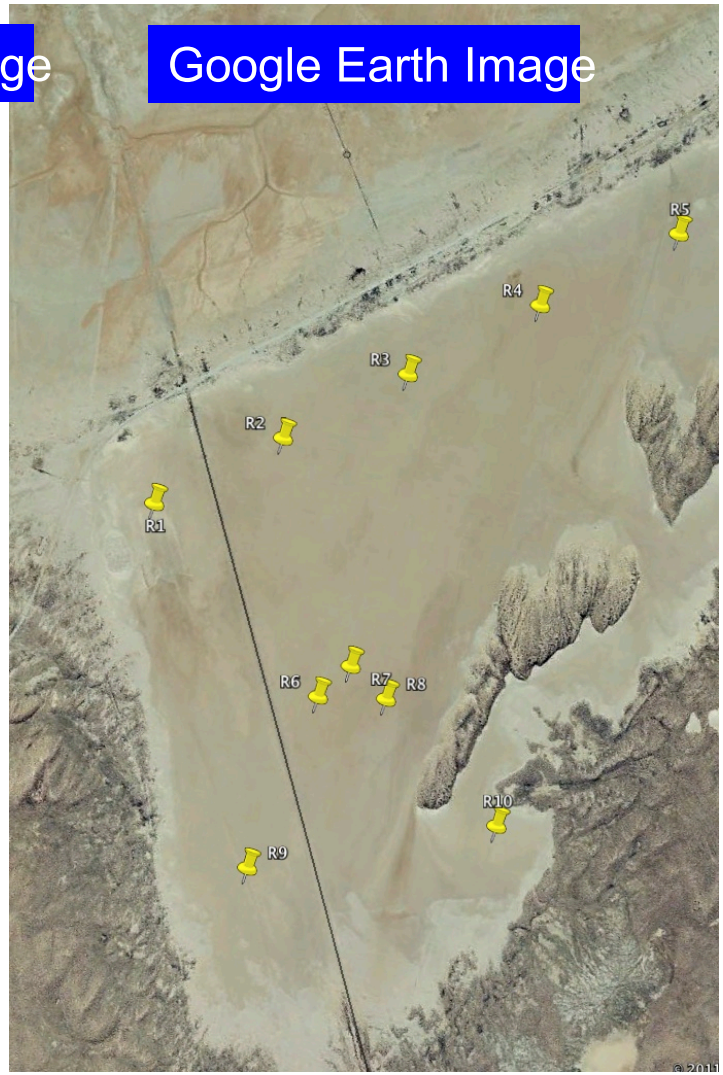

Beam Formed Imagery

- **Pass 11 imagery before and after beam forming.**

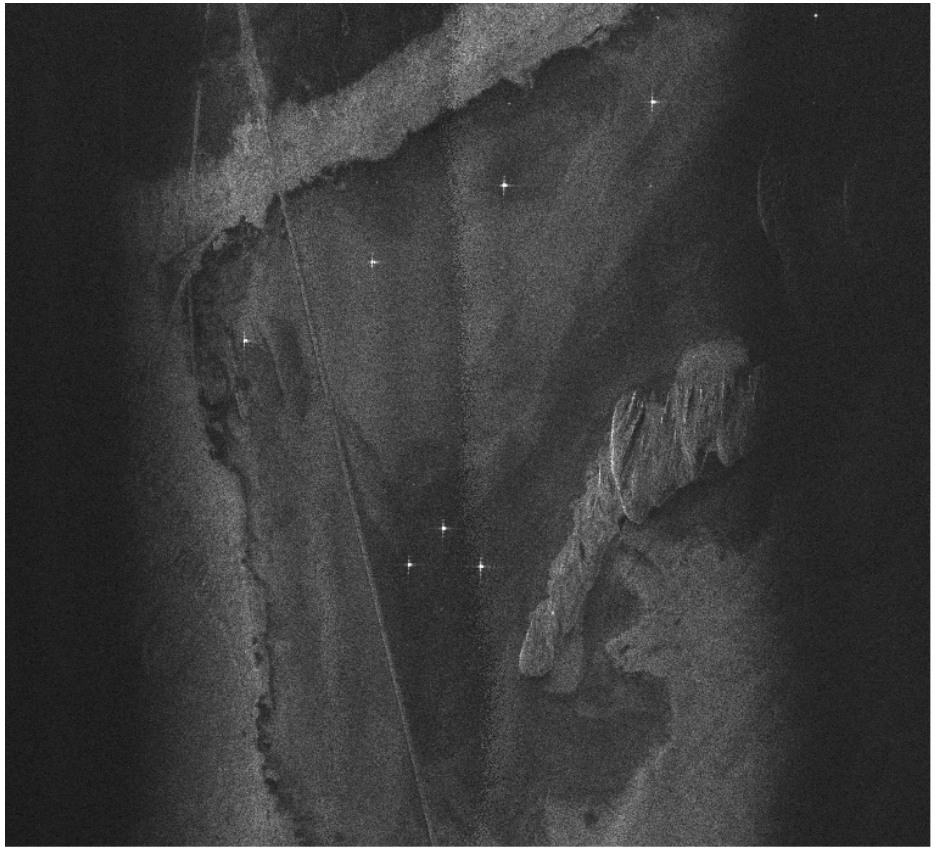

Simple Mosaic

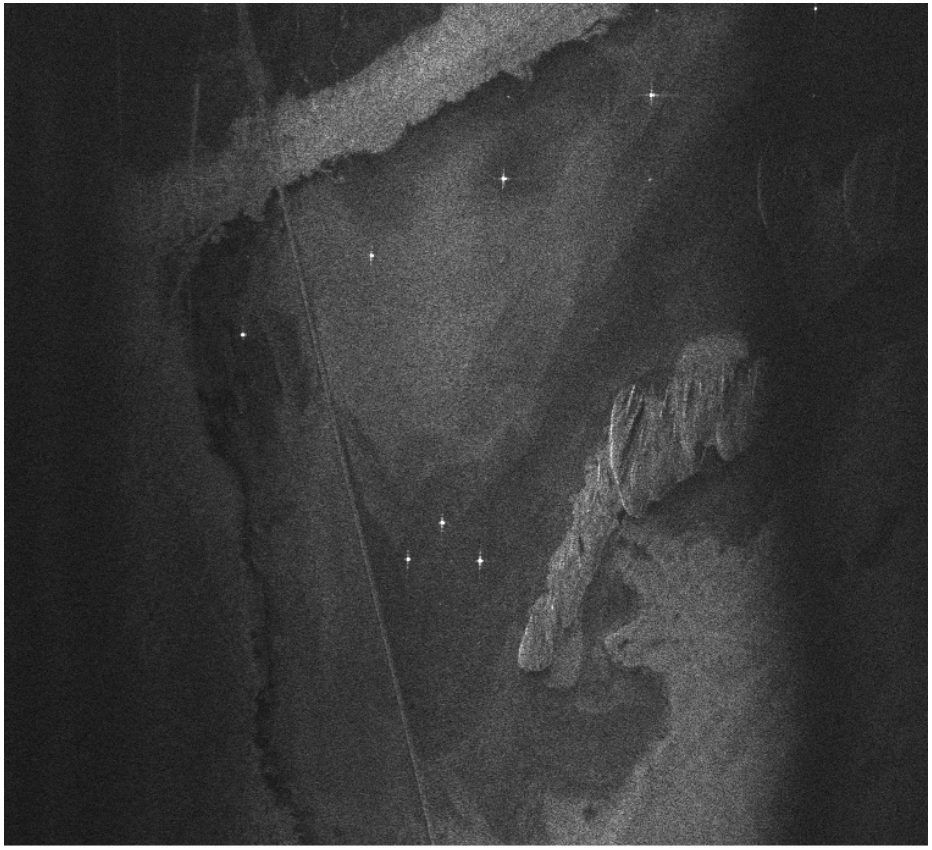

Beamformed Image

S. Hensley, *et al*

Calibrated-Beamformed Image

The left image is the beamformed image from the prior slide. The right image is after calibration. Both operations were done with extensive human-in-loop. For a spaceborne radar, this must be done autonomously, in space since we cannot support the downlink volume required to send pre-beamformed image for ground processing

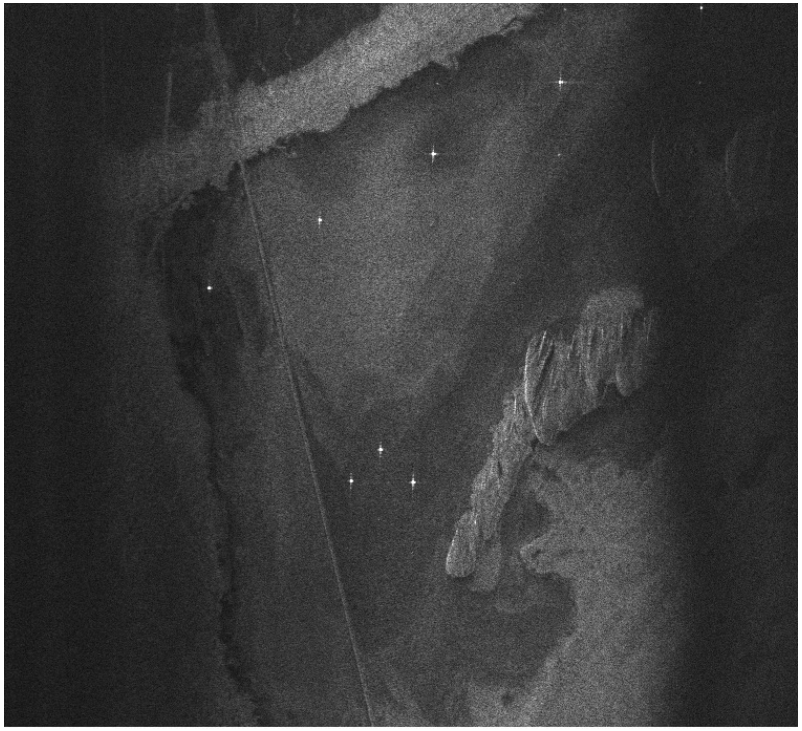

Findings and Results

But first, a brief description of what elements are needed

- **The goal of this work is to develop and demonstrate a flight-qualifiable digital calibration system, enabling a digitally beamformed system, and targeting the DSI SweepSAR architecture. To do this, the following elements are required:**
- **Analog hardware (TRM), with appropriate calibration circuitry**
- **Digital hardware (FSP & SSP), with the ability to digitize and process the analog signals**
- **Theoretical algorithms, to perform estimations and corrections of the analog transmitter and digital receiver**
  - **The N-analog transmitters are required to be in-phase, and the algorithms estimate that phase and produce a correction, which is applied to the analog phase shifter in each transmitter**
  - **The N-digital receivers (actually analog & digital)are required to be clocked simultaneously, have analog amplitude and phase errors detected, estimated, and corrected digitally. The digital correction is done by applying a complex correction factor to each channel's digital beamforming coefficients.**
- **Firmware to implement the theoretical algorithms, including**
  - **Estimating amplitude and phases of CW tones and Chirp Waveforms (Tx and Rx)**
  - **Correction of analog phase, by commanding phase shifter (Tx)**
  - **Correction of digital phase and amplitude (Rx)**

High Level Calibration Circuitry Architecture

Transmit Mode

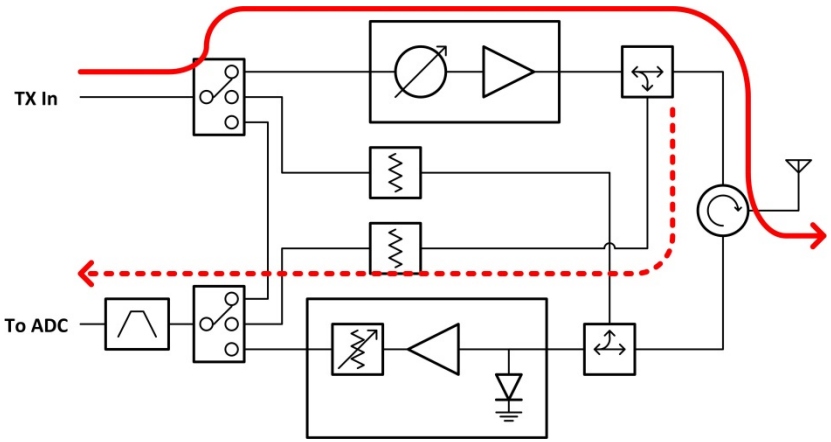

- Set phase shifter values
- Chirp estimation for data header

Receive Mode

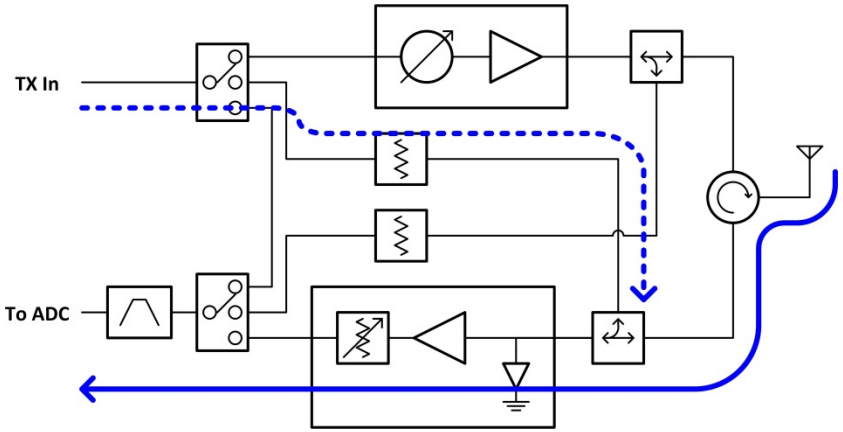

- CW tone to correct channel for on-board beamforming

Bypass Mode

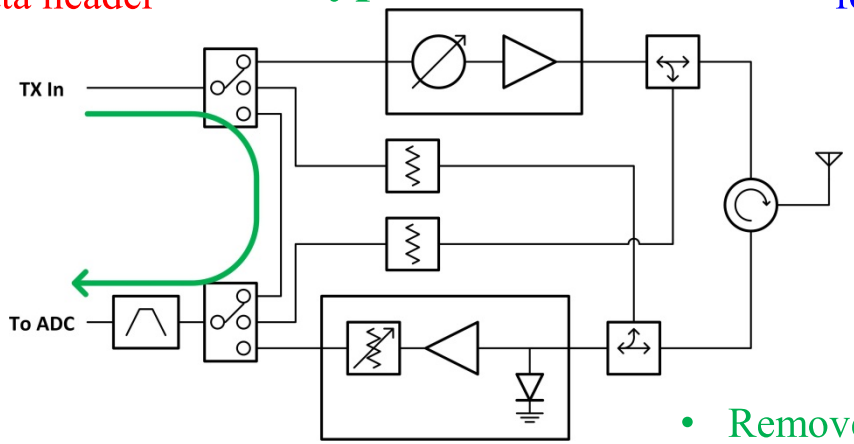

- Remove common parts from TX cal
- Align ADC clocks

Trade Study for Filter Placement
(significant impact on DSI TRM architecture)

- The transfer function of the two analogue bandpass filters (BPF) followed by ADC have been characterized through measurement over temperature.
- The impacts on chirp signal without filter(ideal case) and with filters are investigated at two locations. The first location of interest is one before ADC and the other one is after the FSP filter at the tx-chirp correlator where the delay of the system is quantified.
- Perform the range compression on both ideal and filtered chirp with the same reference matched to the non-filtered (ideal) case and then quantify the impacts in terms of loss, PSLR,ISLR, and range resolution.

80-MHZ CHIRP CORRELATOR FOR VARIOUS INPUT DELAYS

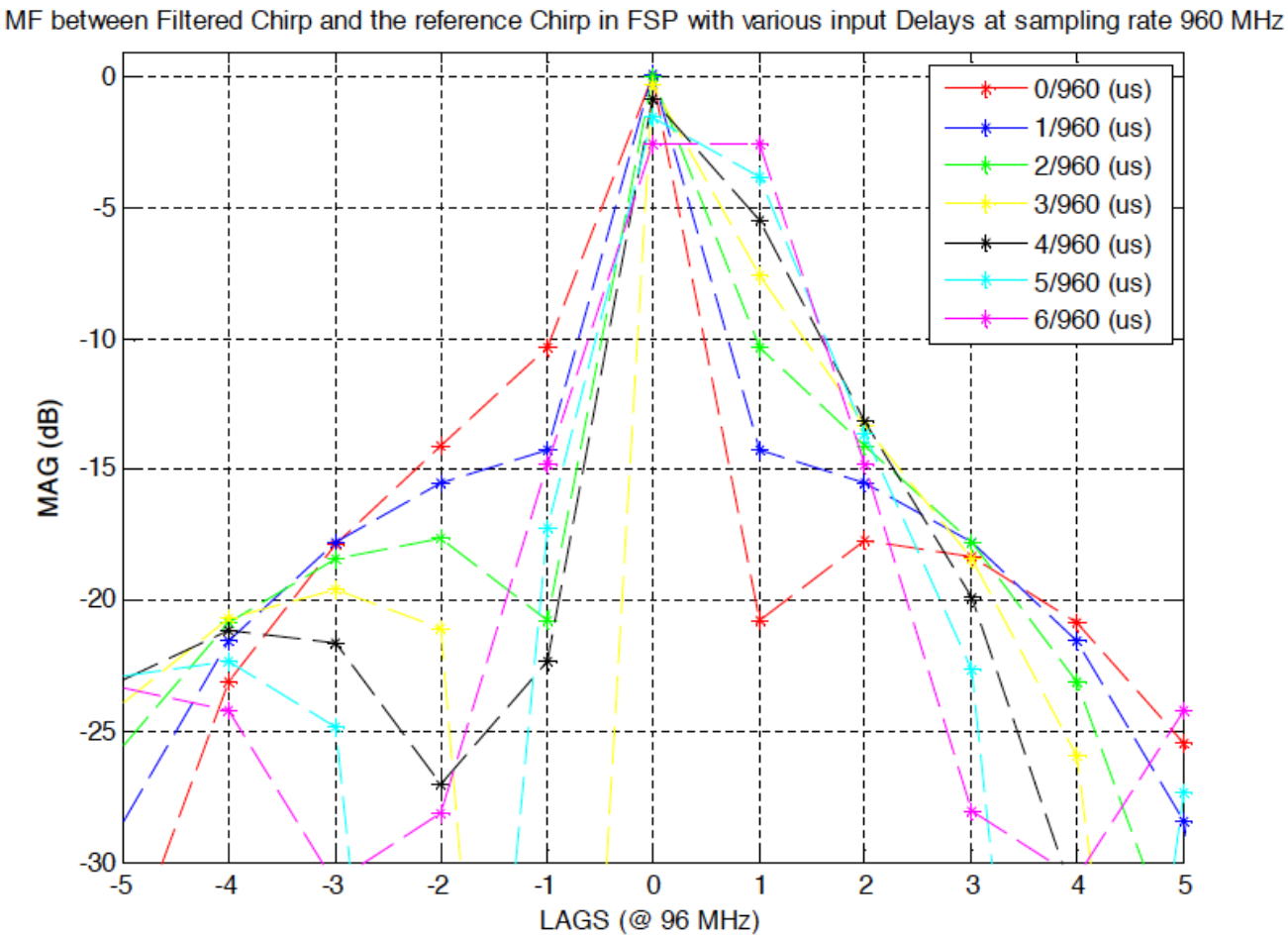

RANGE COMPRESSION (RC) ON BOTH IDEAL & FILTERED CASES

AT THE OUTPUT OF ADC (I)

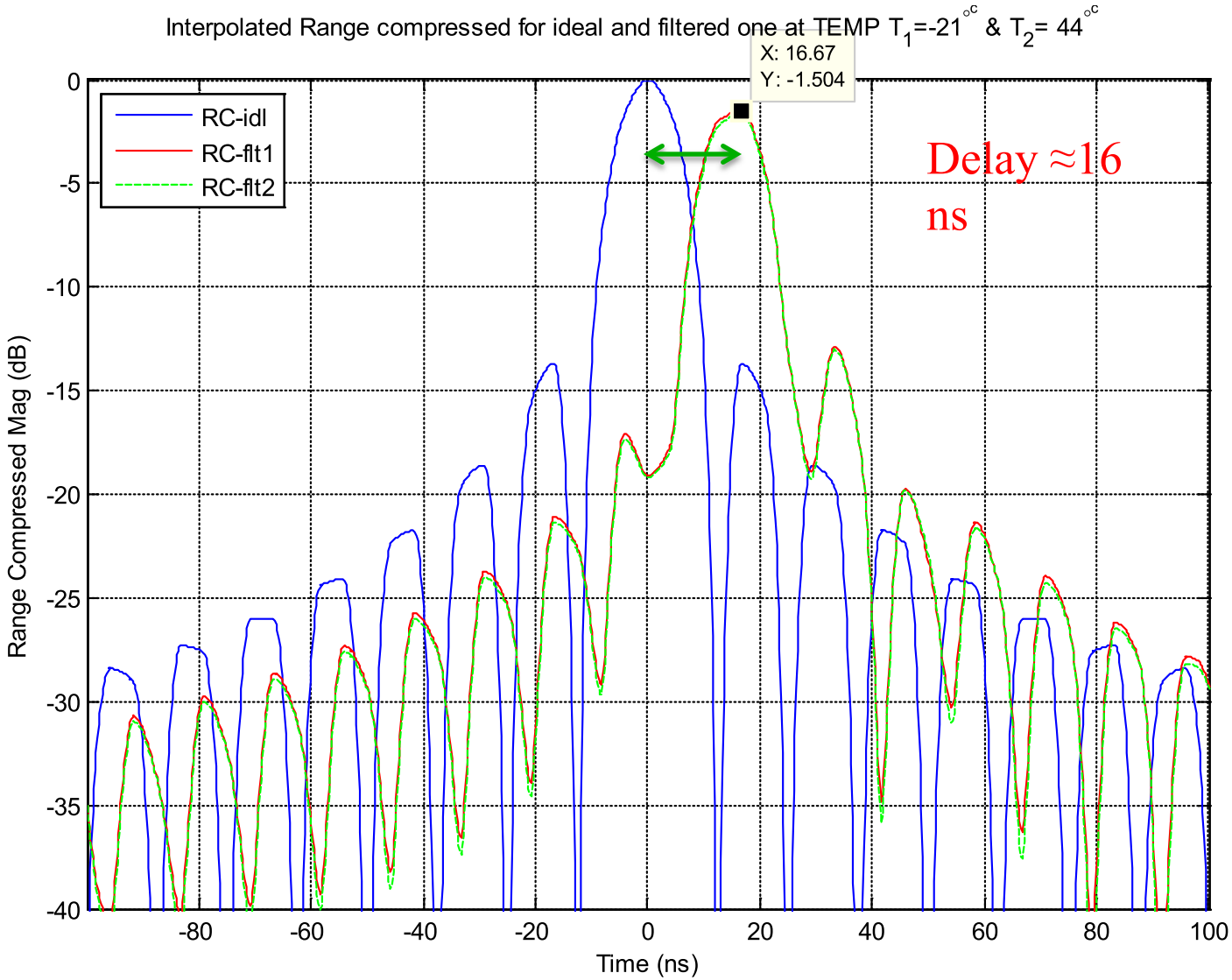

RANGE COMPRESSION (RC) ON BOTH IDEAL & FILTERED CASES AT THE OUTPUT OF FSP CORRELATOR (II)

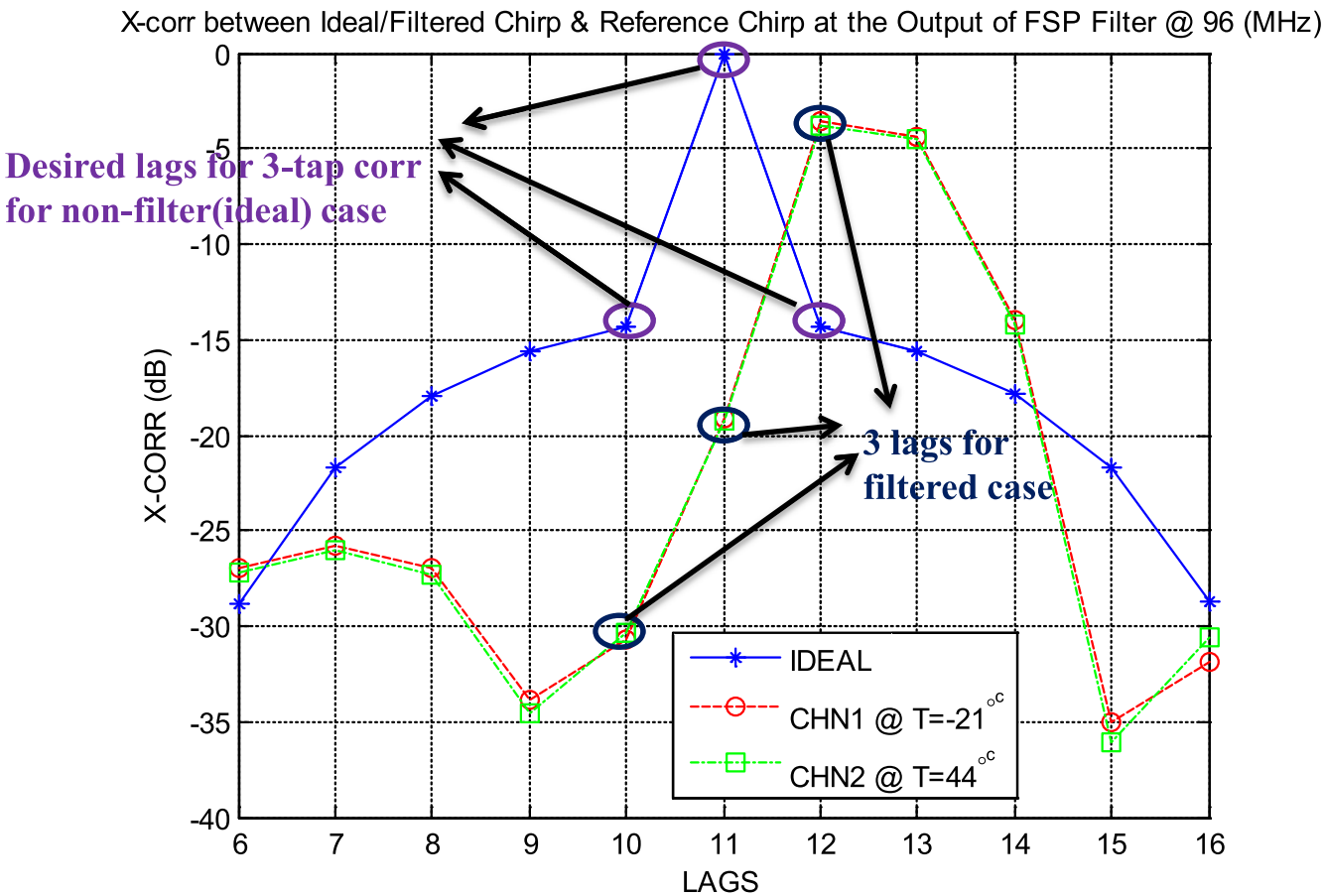

- The delay of 11 lags (at 96 MHz clock) for the ideal case is due to the FSP 80 MHz filter with 110 taps!
- The extra delay for filtered ones is due to the 16 ns delay introduced by the analogue BPFs.
- The extra delay goes beyond 96 MHz clock (<10 ns)!

Trade Study: Calibration Interference or Ghosting

- During calibration the phase and amplitude of the signals are estimated, and this estimate requires roughly 20-30 independent samples given the expected SNR of >20dB.
- The ghosting issue is due to the non-independent nature of the very low-level reflected signals that occur due to the natural imperfect impedance matching across connectors, cable bends, etc. These do NOT average down.

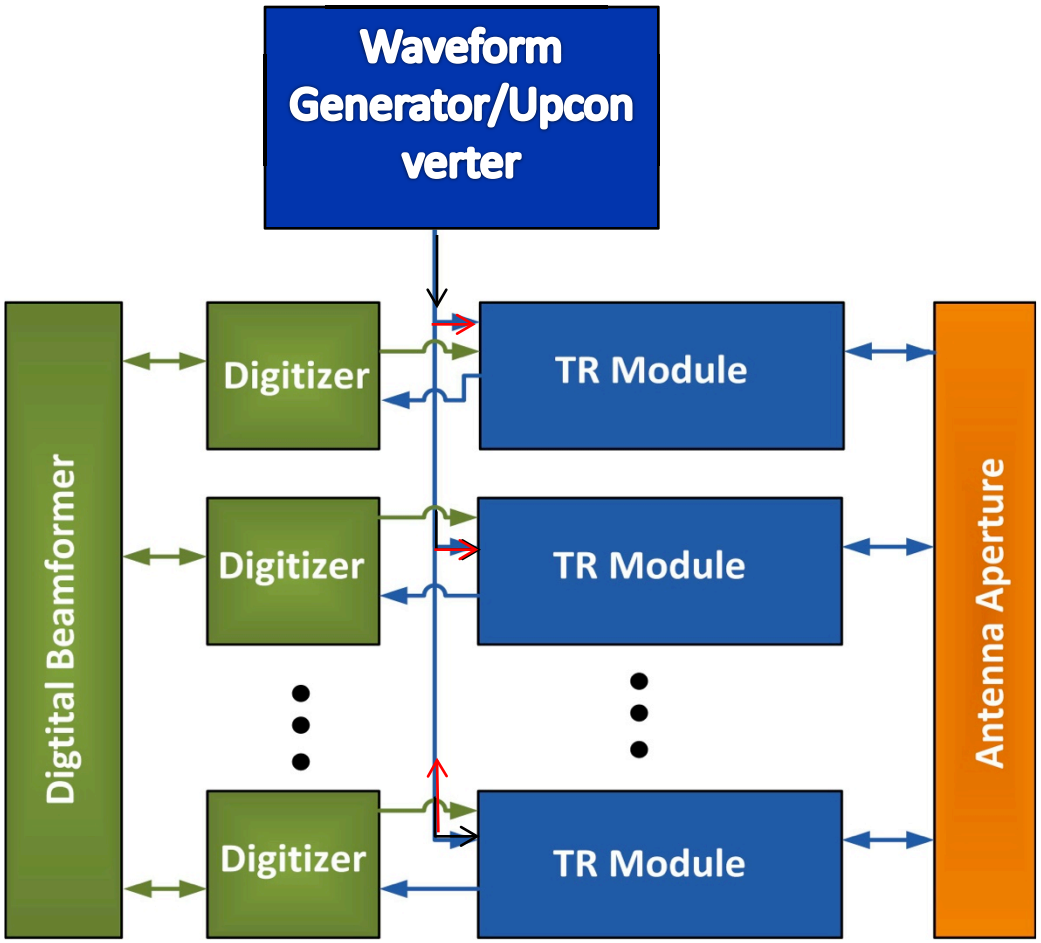

Impact of Ghosting

- **Interferometry requires phase stability rather than phase accuracy**
- **Slope of the phase error curve is important**
- **Signal is nearly sinusoidal so bounds are similar**
- **Results show that for an arbitrary length cable (modulo 180° being worst case) the return loss must be -55dBc or better**

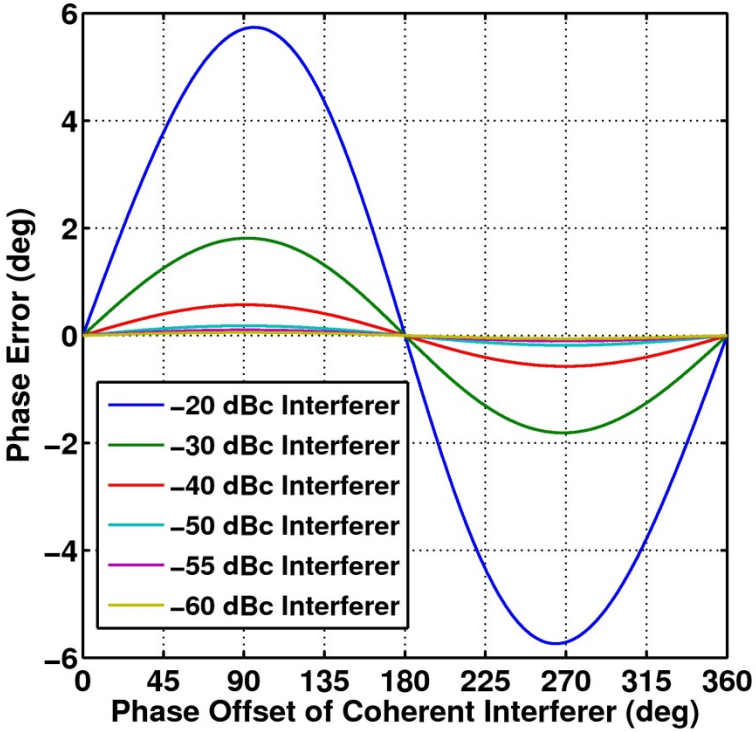

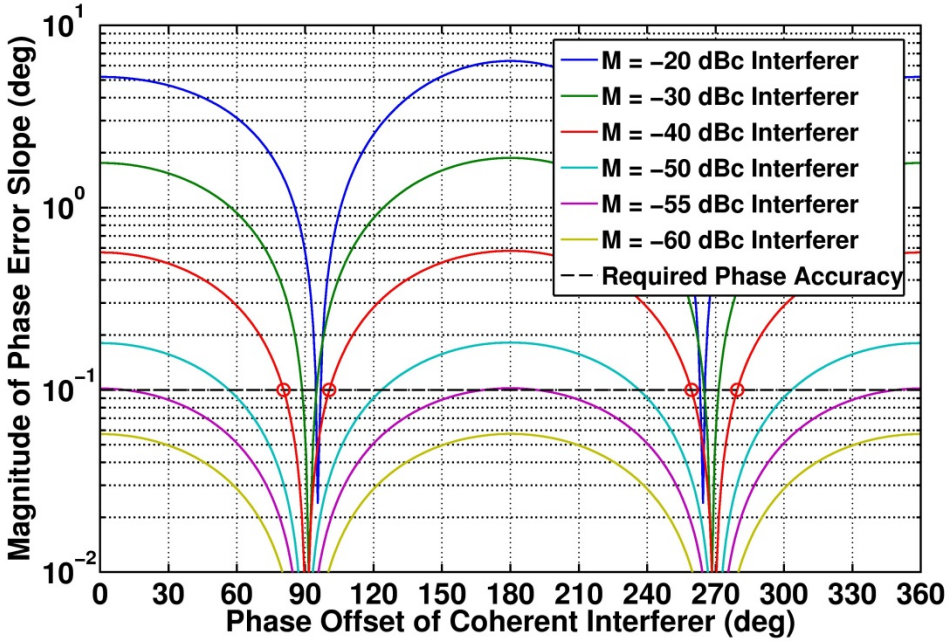

Ghost Image Interference

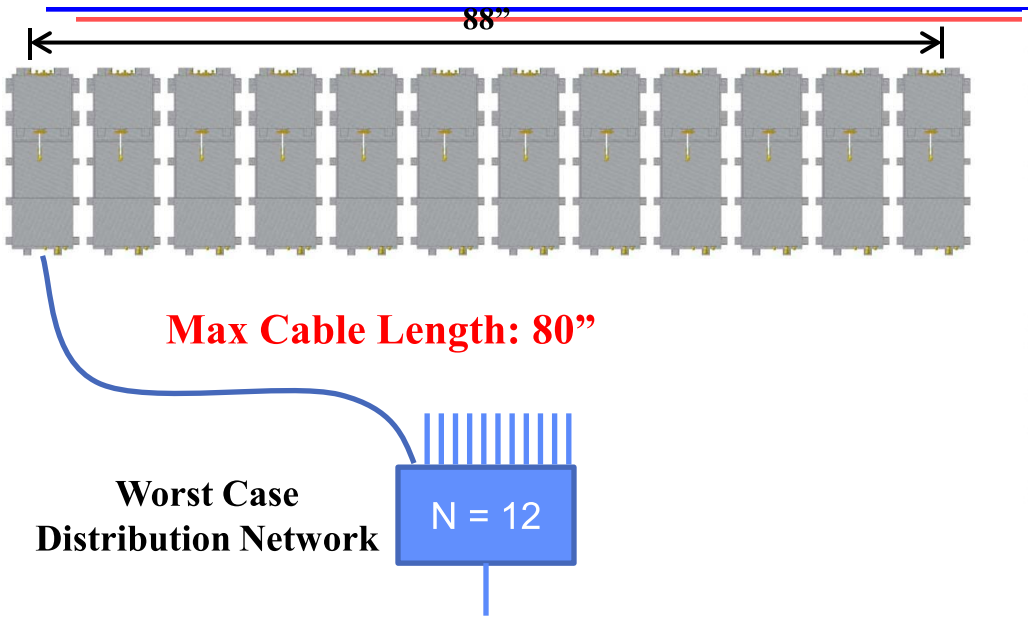

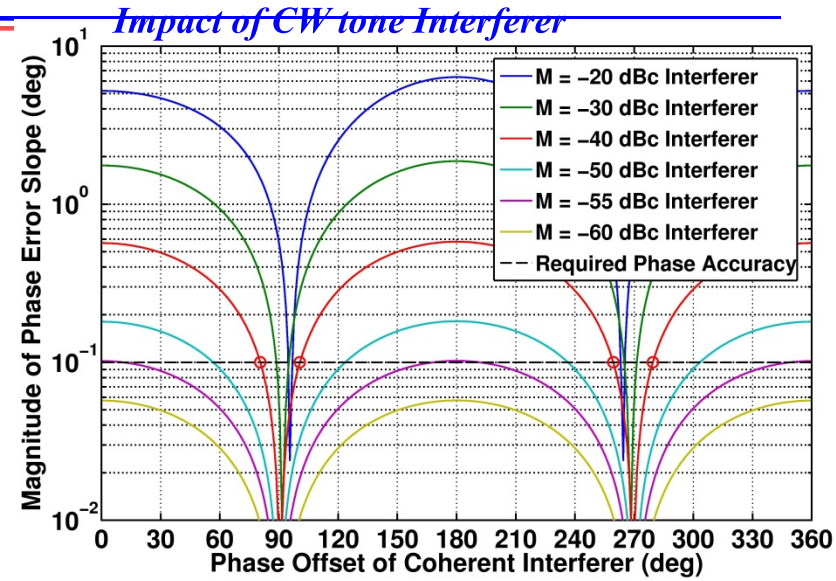

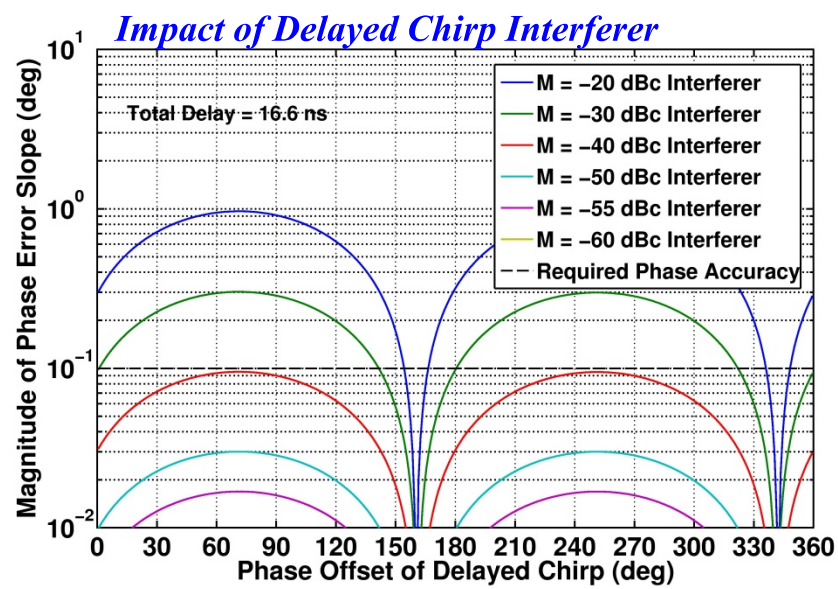

Reflection between T/R module and Distribution network introduce a true time-delay interferer at the T/R Module input:

- Signal is coherent and so will not average down
- Chirp is not as bad as CW because of matched filter

Ghosting Trade Study Findings

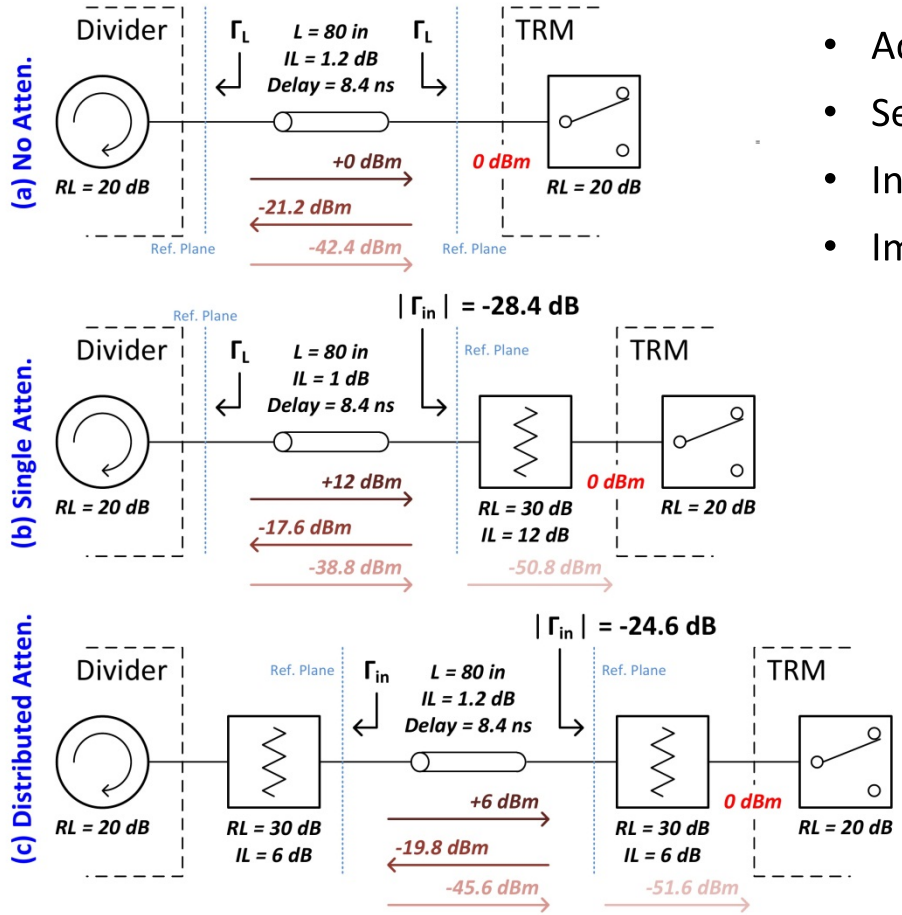

Mitigation Strategies:

- Add attenuation to increase rejection of reflected signal
- Set cable lengths to avoid regions of large phase change
- Increase UCA output to make up for increased loss
- Improve input return loss of TRM through matching

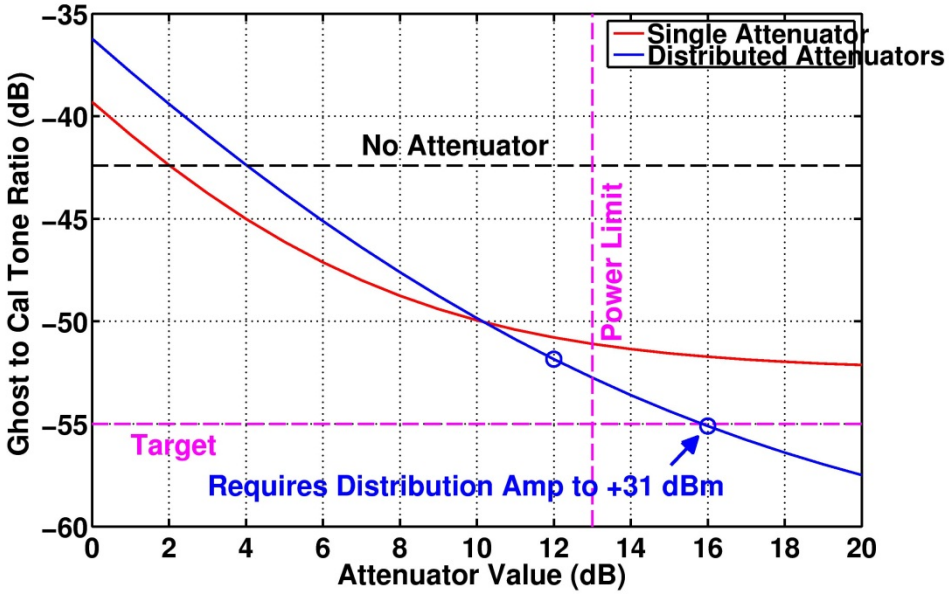

Trade Study: Switches vs Couplers

- There is a DSI desire to move the switches out of the primary transmit and receive paths to increase reliability
- To do so would violate the 55 dB isolation requirement!

Coupler Topology

Transmit chain needs dynamic range (DR) of 150 dB!

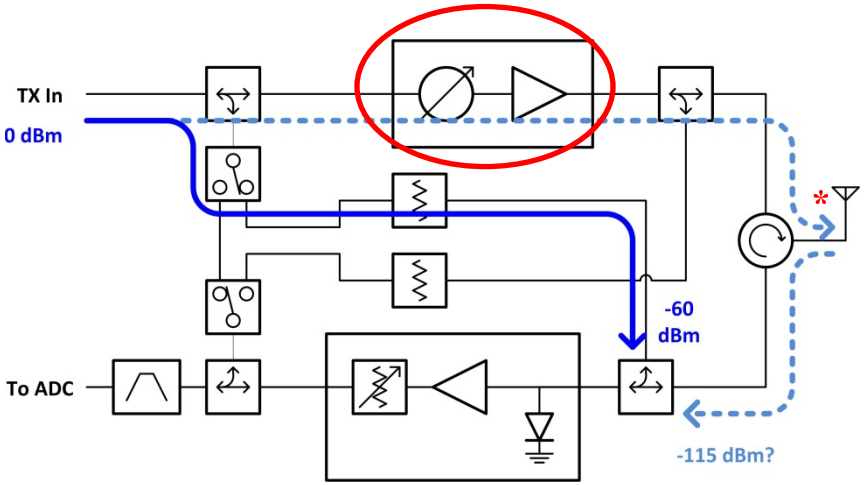

Switch Only Topology

In-path switch directly relieves dynamic range requirements on transmit chain

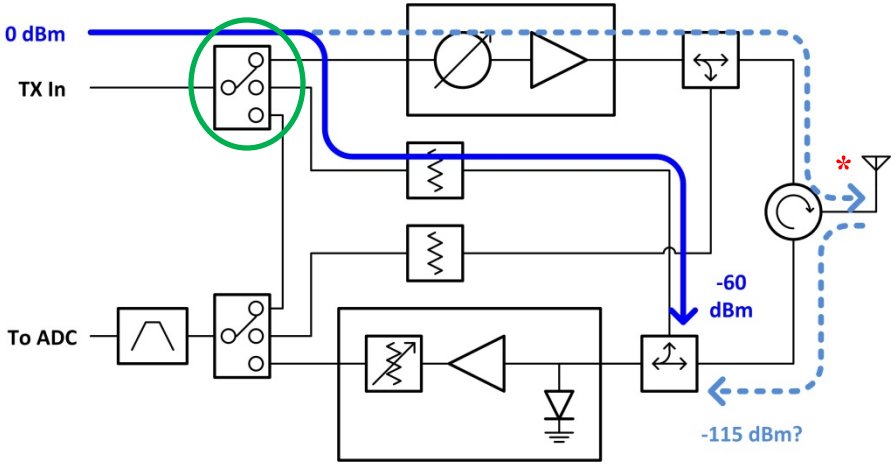

Conclusion: Switch needs enough isolation to keep TX chain DR requirement to 100 dB. (From 50 dB gain when enabled to 50 dB loss when disabled)

* Working assumption is 15 dB return loss on antenna

Trade Study: ADC Output – Switch vs Couplers deux

- Similar concerns during TX mode that in-path switch represents increased failure risk
- In-path switch architecture is also needed here to meet the 55 dB isolation requirement
- Furthermore, low noise linear amplifiers do not like to be DC switched…

Coupler Topology

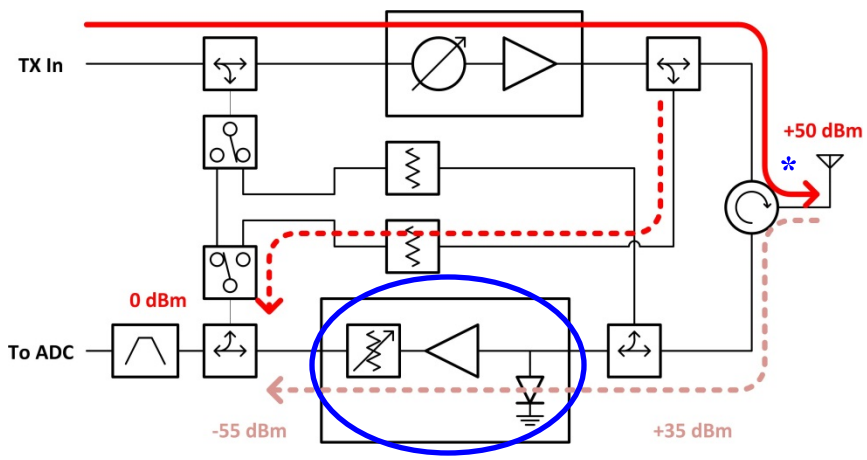

- **Receive chain needs dynamic range (DR) of 140 dB!**
- **Can't rely on amplifier power-down to achieve this**

Switch Only Topology

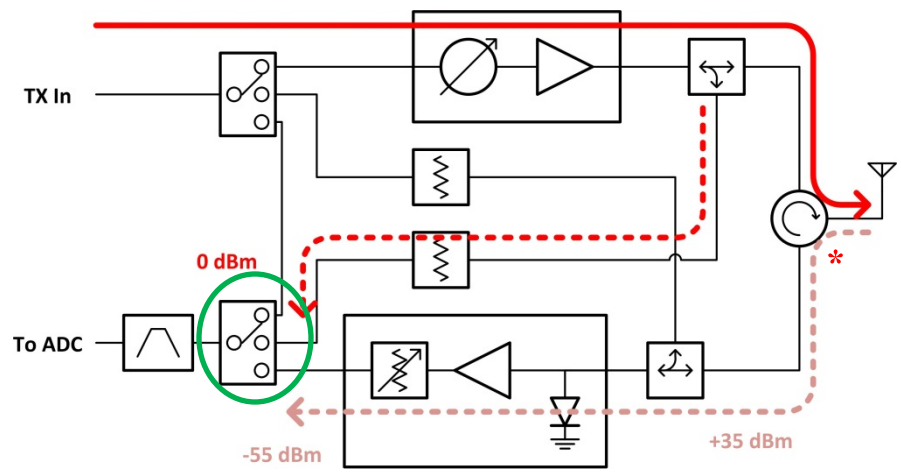

In-path switch directly relieves dynamic range requirements on receive chain

Conclusion: In-path switches need to be part of a multi-faceted solution to meeting the isolation requirement

* Working assumption is 15 dB return loss on antenna

Images of Testbed

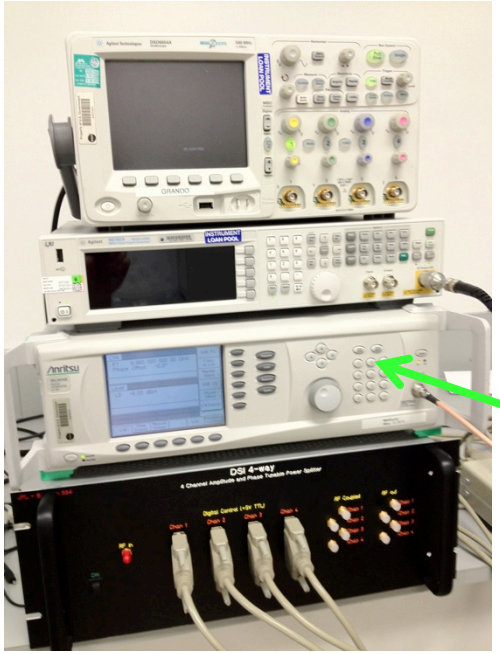

Multi-channel excitation: Single channel of CW or chirp, through an computer controlled 4-way splitter with independent control of phase and amplitude.

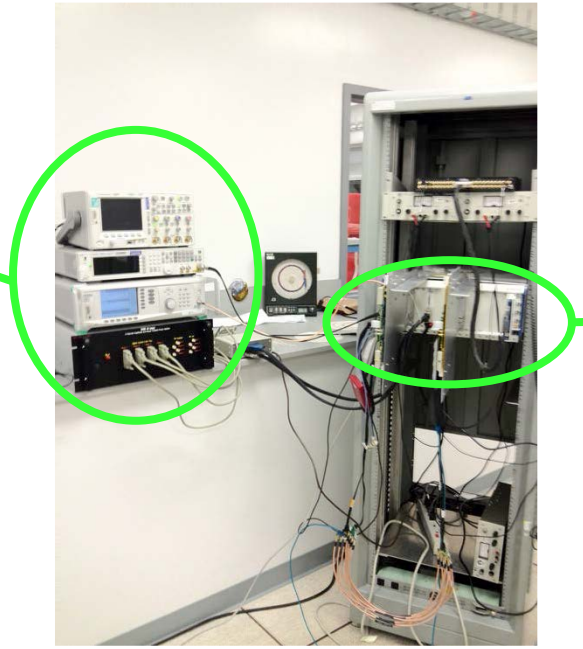

ACT: Digital Calibration Testbed

iFSP (First Stage Processor in iBoard4); iSSP (Second Stage Processor in iBoard4); and a National Instruments cPCI chassis acting as RIC (Radar Instrument Controller)