(Preprint) AAS 13-457

LESSONS LEARNED FROM THE DEVELOPMENT OF THE MSL DESCENT STAGE PROPULSION SYSTEM

Carl S. Guernsey[*] and Jeffrey M. Weiss[†]

Development of the MSL descent stage propulsion system required a number of new propulsion hardware developments incorporating technologies not normally found in spacecraft propulsion subsystems. These developments were driven by the relatively high (25,000 N) maximum thrust level and the requirement for precise throttling of the main engines. This paper presents lessons learned in the course of these developments, including surprises and anomalies discovered at both the component and subsystem levels.

INTRODUCTION

The Mars Science Laboratory (MSL) is the most recent mission to Mars carried out by the NASA Science Mission Directorate's Mars Exploration Program. The flight system was developed at the NASA Jet Propulsion Laboratory (JPL). The mission's objective is to examine the Martian environment in unprecedented detail to help determine whether conditions conducive to the emergence of life exist or may have existed in the past. In support of this goal it was necessary to develop an Entry, Descent, and Landing (EDL) system capable of delivering a one-ton rover gently to the surface. This required development of the unique Sky Crane EDL system that has been previously described[1]. This effort culminated in the successful landing of the Curiosity rover on Mars on the evening of August 5, 2012 (Pacific time).

The Descent Stage (DS) propulsion subsystem required for the MSL EDL system is the most sophisticated propulsion system ever developed at JPL. A block diagram is shown in Figure 1. It is a pressure regulated monopropellant hydrazine propulsion system that uses eight throttled 3300 N thrust Mars Lander Engines (MLEs) for terminal descent. Eight 250 N thrust Reaction Control System (RCS) thrusters are used to maintain attitude prior to atmospheric entry and to perform aero maneuvering during the entry. Three propellant tanks provide for a propellant load capacity of approximately 400 kg. Isolation of pressurant and propellant prior to system activation is accomplished by extensive use of pyrotechnically actuated valves (aka "pyro valves") that incorporate redundant parent metal seals to preclude leakage. The subsystem design and operation are described in detail in Reference 2.

---

[*] Principal Engineer, Propulsion, Thermal, and Materials Engineering, Jet Propulsion Laboratory, California Institute of Technology, Pasadena, CA
[†] Principal Engineer, Propulsion, Thermal, and Materials Engineering, Jet Propulsion Laboratory, California Institute of Technology, Pasadena, CA
[††]Copyright 2013, California Institute of Technology

Several new developments required for the MSL descent stage propulsion system were identified at an early stage and early funding was made available from the Mars technology program to allow an early start on these activities. These developments included: 1) the MLE, with a design based on the engine used on the Viking landers of the 1970s, but using a new caveating throttle valve, 2) a High Flow Pressure Regulator (HFPR) capable of supplying helium to the pressure regulated propellant tanks, and 3) lightweight high-capacity filters.

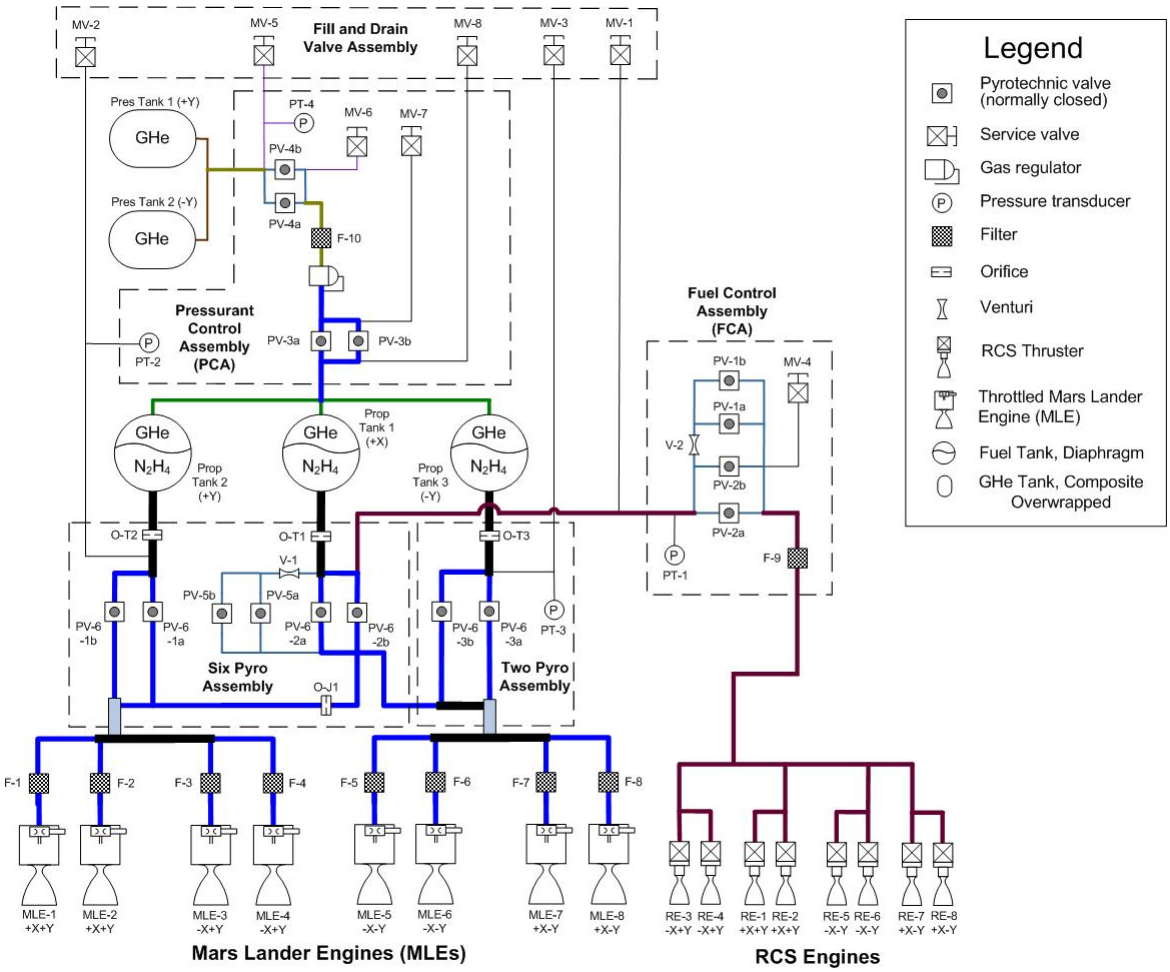

Figure 1. MSL Descent Stage Propulsion Block Diagram.

Lessons learned from the MLE and HFPR developments are described below. The lightweight filter development was one of the few areas where no particular issues were encountered.

Other developments were considered to be "work as usual" and were pursued on a typical development timeline. These developments included: 1) a new high flow normally closed pyro valve, 2) new propellant and pressurant tanks using conventional technologies, 3) a new valve for the descent Reaction Control System (RCS) thrusters, and 4) fabrication of bimetallic (titanium-to-stainless steel) transition tubes. All of these developments except the propellant and pressurant tanks experienced challenges that are described below. The only two components on the DS propulsion system that did not require development and qualification were the pressure transducers and service valves, making this a very ambitious program.

Other lessons learned arose in the integration of the propulsion hardware with the descent stage structure. In a typical spacecraft propulsion system the propellant lines connecting the various propulsion assemblies are relatively small and flexible, such that any flexibility in the spacecraft structure induces very little stress in those lines and fittings. The relatively high thrust requirement of the descent stage propulsion system mandated use of relatively large (up to 1 inch diameter) lines that were extraordinarily stiff. That necessitated using a fatigue approach to verify the integrity of the feed system, with new experimental methods required to validate the design.

MLE DEVELOPMENT ISSUES AND LESSONS LEARNED

The MLE development was actually two developments: 1) development of a new thrust chamber assembly based on the Viking engine developed in the 1970s[3] and 2) the development of a cavitating Throttle Valve Assembly (TVA). Principal challenges anticipated for the development of the thrust chamber were recovery of design and process data (done in the old "lead on vellum" days) and potential material obsolescence issues. The TVA was a new development intended to provide precise control of the flow rate to the MLEs independent of any increase in the catalyst bed pressure drop (provided the valve remained in the cavitating regime). The cavitating valve also precluded cross talk between MLEs since roughness and spiking in a MLE could not propagate upstream of its TVA.

MLE Thrust Chamber Assembly Issues and Lessons Learned

The MLE thrust chamber was developed by Aerojet in Redmond, WA, which was also responsible for integration, testing, and delivery of the integrated MLE[4]. As many features of the original Viking catalyst bed and injector design were retained as practical, but material selections were updated, bed retention was improved, and the combustion chamber was changed to a single nozzle design rather than the multiple nozzle design used on Viking. It was also necessary to use Aerojet S-405 catalyst for the inner catalyst bed since inadequate supplies of the heritage Shell 405 catalyst remained to support the MLE development and flight build. An outer bed was comprised of the same non-spontaneous LCH-101 catalyst used in the original Viking engine.[3]

The first development test unit (DEV 1) of the modified engine design performed very well, meeting all expected performance and life goals. The measured C^* was lower than expected, but this turned out to be an instrumentation artifact. The chamber pressure tap had been placed at a point where the gas Mach number was high enough to have a static pressure significantly lower than the actual stagnation pressure. This was corrected on subsequent development engines by using a pitot tube to measure stagnation pressure. Temperatures of the chamber were also slightly lower than would be expected based on Viking engine test data, but this did not appear to have any measurable impact on performance. The catalyst bed pressure drop was in family with the Viking thrusters, although at the high end of that family.

The second development test (DEV 2) showed much different behavior. After a few starts the catalyst bed pressure drop increased significantly above the family of Viking thrusters, suggesting fairly rapid degradation. This degradation is shown in Figure 2, which compares the catalyst bed pressure drop of the DEV 2 thruster compared to DEV 1 and three Viking units after five tests had been conducted.

Aerojet and JPL undertook a thorough anomaly investigation. Detailed data analysis showed that while the DEV 1 unit met all performance requirements its bed pressure drop had been at the high end of the Viking family. This led to a suspicion that the anomaly could, at least in part, be related to subtle differences between the heritage Shell 405 catalyst and the S-405 catalyst used for the MLE development. It was determined that the S-405 used in this 2005 test had a greater

packing density than the heritage Shell 405 due presumably to subtle differences in particle shape. This led to reduced bed void fraction and may have made the bed somewhat more subject to clogging by fines (i.e., fragments of catalyst shattered during engine assembly and operation). Aerojet subsequently made subtle changes to their process for manufacturing S-405 to minimize this difference and to better control other process parameters.

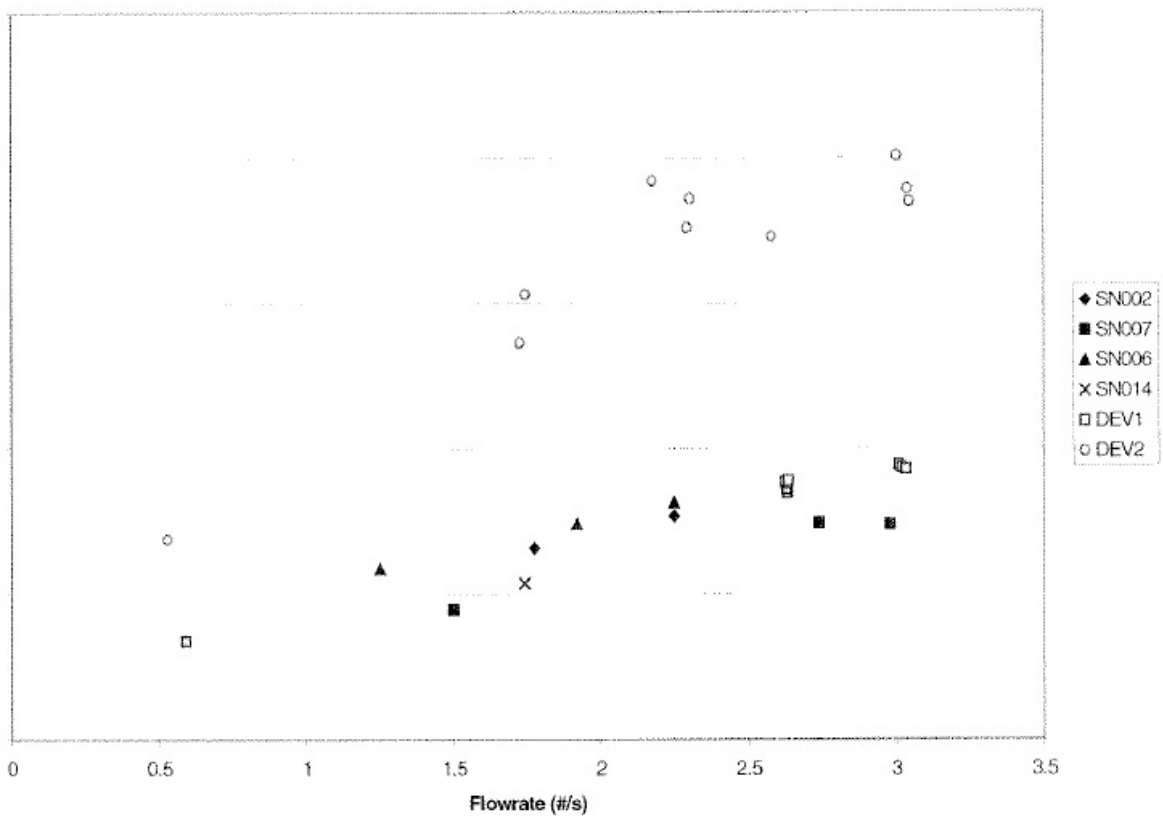

Figure 2. Bed Pressure Drop Increase in MLE DEV 2 Testing

Disassembly and inspection of DEV 2 and DEV 1 revealed that the catalyst bed of the DEV 2 unit has experienced much more catalyst breakage and fines generation than DEV 1. The fines from DEV 2 were skewed towards a much smaller size distribution than those found in DEV 1. However, there was less total loss of catalyst in DEV 2 than in DEV 1, which probably contributed to the plugging of the catalyst bed. The differences in catalyst void fraction between the S-405 catalyst and Shell 405 could explain a higher propensity for plugging, but did not explain the much greater degree of catalyst breakup seen in DEV 2.

The most probable cause of the increased catalyst breakup in the DEV 2 testing is believed to be related to the much lower propellant temperatures experienced in the DEV 2 testing (4 °C to 10 °C) versus temperatures from 18 °C to 22 °C during the testing of DEV 1. These reduced propellant temperatures can have a dramatic effect on catalyst breakup as reported in the literature[5]. The percent particle breakup varies dramatically between 10 °C and 20 °C. The phenomenology for this increase in particle breakup is discussed in some detail in Reference 6.

A third development test was performed in which the first three tests runs were performed using warm (> 20 °C) propellant, followed by a fourth test using cold (4 °C) propellant. The rate of

increase in catalyst bed pressure drop increased significantly when the propellant temperature was reduced. The conclusion of the failure investigation was that the accelerated bed degradation seen in DEV 2 was most probably caused by operation with very cold propellant, with the differences in packing density between S-405 and Shell 405 a potentially significant contributing factor. The corrective action for the MSL project was to require propellant temperatures in flight to be above 25 °C when the MLEs are fired. Engine qualification was performed down to a propellant temperature of 10 °C to provide margin. In addition, MSL used only S-405 catalyst with the improved process controls identified by Aerojet as part of this investigation, which subsequently came to be denoted as S-405 (2005). There were no further instances of rapid bed degradation during the additional development, qualification, or acceptance testing of the MSL flight engines.

Lessons to be drawn from this include:

- Propellant temperature can have a very pronounced impact on catalyst bed life. It is likely that this was more pronounced on the MLE because of its very high bed loading and movement of the decomposition front during throttling operation, but it is likely to be a factor in other thrusters as well. Unfortunately, recent qualification programs and qualification-by-similarity reports that the authors are aware of have largely ignored the potential influence of propellant temperature on catalyst bed life.
- Very subtle changes in catalyst shape and size distribution can have a major effect on packing and susceptibility to plugging with fines.

Throttle Valve Assembly Issues and Lessons Learned.

The TVA was developed by Moog in East Aurora, NY and is described in Reference 7. Its principle of operation is illustrated in Figure 3. Propellant flows past a movable pintle that forms a variable-area venturi. Cavitation occurs near the throat of the venturi with the result that the flow rate becomes a function of upstream pressure and valve position; there is negligible effect from varying the downstream pressure so long as cavitation is maintained. The contours of the valve body and pintle are critical to providing almost complete pressure recovery on the downstream side of the valve.

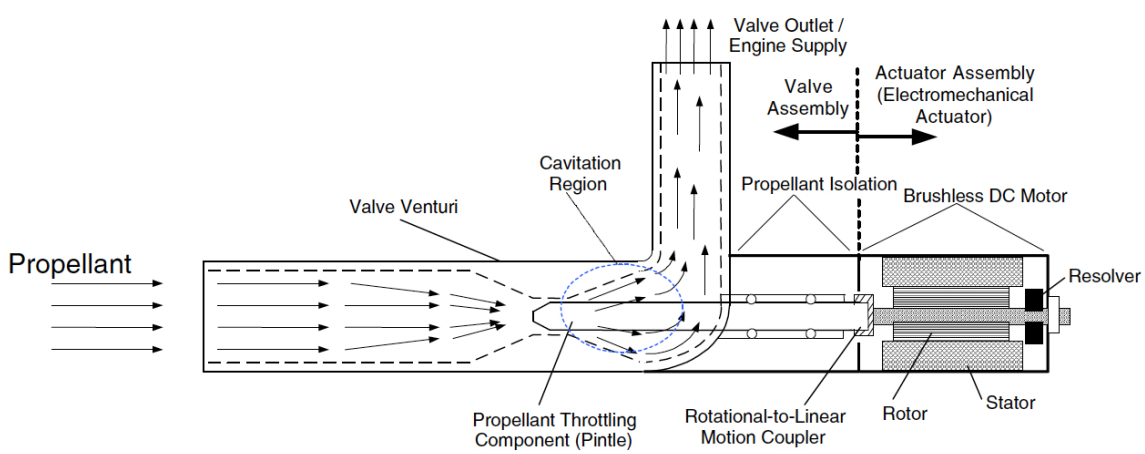

Figure 3. TVA Principle of Operation (from Reference 6)

Figure 3 also illustrates two other key requirements of the TVA: it must allow for a rotational actuator (in this case a DC brushless motor) to drive the pintle in a linear fashion and it must provide sealing to prevent propellant leakage into the vicinity of the motor. A vent port was provided to allow testing of the integrity of these seals.

Unfortunately the first attempt to qualify the TVA resulted in out-of-specification leakage past the propellant isolation seals. Investigation showed that a Teflon bushing used to guide the pintle had become distorted and worn, allowing the pintle to contact the valve body and causing damage to the primary seals. Seal damage was induced both by anomalous loading of the seals and particulate generated by the pintle scraping the valve body. It was determined that the Teflon bushing design had made inadequate allowance for the differential thermal expansion of the materials in this section of the valve, especially during the high (120 °C) bake out required for planetary protection. Further, it was found that the design and assembly procedure for the valve could allow for significant side forces to be applied to the pintle when the valve was actuated, leading to increased load on the bushing and seals. The design was modified with a revised bushing design using a better-suited material and improved motor assembly procedures and successfully completed the qualification program. The basic lessons to be learned from this experience are that complex mechanisms can be subject to serious wear issues due to differential thermal expansion and alignment issues. Perhaps more fundamentally, the early development effort may have focused too closely on the fluid dynamic performance of the component rather than detailed evaluation of the TVA as a mechanism.

Another issue with the TVA arose when the valves were first actuated using flight like motor control electronics. The TVA drive electronics drive the valve to a commanded position in a closed-loop fashion using a Liner Variable Differential Transformer (LVDT) incorporated into the TVA. Because of the schedule phasing of the flight electronics development and that of the TVA most of the TVA and MLE testing was performed using motor controllers previously developed by Moog for use on a launch vehicle application. It was believed that the current to the motor windings in the TVA was limited to a given value and that value was provided to the engineers developing the flight electronics. When the TVAs were first tested with the flight controllers it was found that the response of the combined driver and valve to commands was much more sluggish than had been previously observed. In addition, the controller could not hold the motor stable in positions other than natural "detents" formed by the magnetic design of the motor. This result was unacceptable response to throttle commands and unexpected "granularity" in the ability to command the pintle location.

Investigation showed that the Moog control electronics were limiting average power to the desired level, not the instantaneous current to the valve coils. Fortunately, the flight electronics current limit was adjustable and the design was found to be capable of providing the higher current levels required to drive the TVA in a more acceptable fashion. Other control parameters in the motor driver were also adjusted to provide acceptable response characteristics. Subtle differences in control electronics can significantly affect performance.

Lessons to be drawn from this effort include:

- The design of components like the TVA contained more complex mechanisms than are normally incorporated into propulsion flow control devices and care must be taken to insist on thorough design assessments of these aspects of the device. To make tthese reviews effective it is necessary to penetrate to the piece part level, not simply watch a PowerPoint presentation.
- Emphasis should be placed on ensuring that devices which require closed-loop control such as the TVA are tested with flight like control electronics as early as possible in the development.

HFPR DEVELOPMENT ISSUES AND LESSONS LEARNED

The MSL HFPR had unique requirements for a spacecraft pressure regulator due to its high flow rate (the entire 400 kg propellant load could be consumed in approximately 30 s during powered descent) and relatively high operating pressure. The design was based[8] on re-tuning the pressure regulator used in the Space Shuttle Main Propulsion System to meet MS's requirements. The design was modified to slightly reduce the regulated set point of the regulators and to provide for all-welded hermetic pressure containment.

Eaton Corporation had originally developed the regulator, but Vacco Industries now owned the design. Fortunately, Vacco had also hired some of the hands-on personnel who had originally built the regulators for the Shuttle fleet. However, no units had been fabricated or tested in over a decade, leading to concerns as to how reliably the design could be resurrected, let alone modified to meet MSL requirements. Vendors for some critical components had also ceased production. The regulator is a very complex pilot operated design that had previously experienced stability problems[9].

These concerns were greatly reduced by engaging United Space Alliance (USA) and Indyne, Inc. along with Vacco and JPL into an integrated product team. USA had current experience with testing of these regulators for the Space Shuttle program. Additionally, USA assisted JPL in requesting, and receiving, three existing units that could be modified to meet MSL requirements. Indyne, Inc. was added to the integrated product team to perform dynamic modeling of the regulator to guide Vacco in tuning out any stability issues that might arise. Indyne personnel had been involved in previous stability analysis of the regulator.

The effort to tune the regulators to MSL requirements proved to be highly iterative, requiring regulators to be assembled, tested, disassembled and retrofitted with other shims and Belleville springs. Often the replacements were barely dimensionally discernable from the items being replaced. The process was a technical success but significant cost and schedule growth occurred.

Two problems were encountered in providing the hermetic regulator body: 1) regulator leakage resulted from stingers in the stainless steel material used to fabricate the regulator cap and 2) leakage occurred due to a poorly conceived electron beam weld configuration. In both cases the problems might have been avoided if the design and materials had been reviewed earlier by an experienced propulsion materials and process specialist. The material problem was one in which the stainless steel material did meet all required specifications, but could have been expected to have significant stringer content because several trace elements were at the extreme limits of the specification. Early review and/or metallographic screening could have prevented an expensive and time-consuming rework.

Lessons that can be drawn from this effort include:

- Pilot-operated regulators are highly complex devices that must be tailored to each application. Significant resources should be planned in adapting them to new applications even when the changes seem minor.
- Early involvement of materials and process specialists should be encouraged to avoid problems with in-spec but abnormal material conditions and/or poorly conceived processes.

PYRO VALVE DEVELOPMENT ISSUES AND LESSONS LEARNED

The MSL Descent Stage Propulsion system required the use of a large number of pyro valves for isolation of pressurant and propellant until the system is activated. Eight of these valves (designated as PV-3 and PV-6 valves in Figure 1) had to be capable of accommodating very large flow rates with an acceptable pressure drop. Conax Florida Corporation was contracted to develop a valve meeting the MSL requirements. Conax is the dominant US supplier of pyro valves for conventional spacecraft applications.

The design that emerged had two unique features: 1) the inlet tubes were of a larger diameter than units typically used in spacecraft propulsion subsystems and 2) the valve was designed with a "flying ram" which was intended to shear the parent metal shear section of the valve with enough residual momentum to fly across the flow passage and wedge into a tapered cavity on the other side of the valve. As shown in Figure 4, the valve uses two redundant NASA Standard Initiators (NSIs) [located at the top of the valve] to ignite a booster charge internal to a Primer Chamber Assembly (PCA) which threads onto the top of the valve body. The resultant pressure causes a piston in the valve body to stoke and strike the "flying ram". The tapered section designed to trap the ram in at the base of the valve.

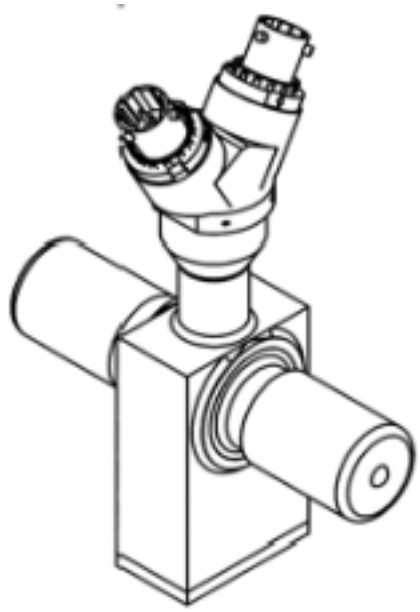

Figure 4. High Flow Pyro Valve Configuration.

The valve design claimed heritage for the PCA and piston design from Conax's highly successful line of spacecraft pyro valves. Heritage was also claimed for the "flying ram" design that had been used in valves designed by UPCO that Conax now owned the rights to. However the development and qualification testing was planned and conducted in a manner consistent with an all-new design, with a total of 9 development units and 27 qualification units.

The effort ran into schedule problems almost from the beginning. At the time this development was occurring Conax was undergoing significant management turnover and this effort was transferred to at least four different program managers, making it easy for things like the procurement of long-lead items to fall through the cracks, and indeed these types of things occurred. The workforce at Conax was highly attuned to production programs and the demands of a new

development were difficult to meet. However, the design and fabrication of the development lot of pyro valves did proceed.

In February of 2006 Conax notified JPL and its other customers of incidents that had occurred on other programs where the booster charge on one of their standard pyro valves had failed to fire, and the valves had failed to actuate, even though both of the NSIs had been fired. It quickly became clear that simultaneous firing of the redundant NSIs was at least a contributing factor to this failure, as four failures had occurred with simultaneous NSI firings in a short period of time while there had been over 620 successful firings where a single NSI was fired[10]. The MSL project immediately responded to these failures by enforcing a delay between the firing of the two NSIs on each valve on the design of the flight pyro firing system.

Examining historical data from other PCA firings and the high flow pyro valve development data collected in April 2006 JPL became concerned that even with staggered NSI firings the reliability of booster ignition using the existing PCA design might not be appropriate for the multi-billion dollar MSL project. There was evidence of long delays in booster firings, although no actual failures of the boosters to ignite were seen in the data. There was also a failure in which the heritage aluminum PCA design had experienced a burn through that could further reduce the robustness of booster ignition. JPL worked closely with Conax to develop an improved PCA[11] design that demonstrated reduced delays in booster ignition indicative of a more robust design and which also precluded burn through of the PCA. A subsequent investigation[12] by the NASA Engineering & Safety Center recommended that the new design be used on future NASA programs, particularly manned programs.

By the time the development testing was completed the schedule has slipped such that it was necessary to proceed with a parallel build of the flight and qualification valves, since there was no longer time to complete qualification before committing to the flight build. This is an undesirable but all-too-common occurrence in propulsion developments. Most of the qualification program proceeded well, including re-qualification of an existing valve design using the new PCA design developed for MSL.

Unfortunately, one qualification valve showed a failure to retain the "flying ram" following actuation and two additional units exhibited ram retention failure during post-actuation pyro shock testing. Specifically, the "flying ram" had come loose from the tapered section of the valve that was intended to hold it in place. Investigation showed that there was widespread evidence of the flying ram "over-stroking" and bouncing off of the base of the valve body. This left it in a state where it was poorly retained in the tapered region, allowing it to becoming completely free when exposed to pyro shock. Flow testing with an unrestrained ram showed that flow through the valve could be largely blocked, the equivalent of a failed-closed condition even though the valve had actuated. Re-inspection of the development valves showed evidence of imprints at the base of the valve body that should have provided a warning of the potential for such a failure. In fact, one development unit had experienced a ram retention failure in a special test using hydrazine that was conducted at JPL, but this occurred after the flight and qual units had been largely completed and was attributed to rough handling required to decontaminate the valve.

With just months left before the Descent Stage propulsion system needed to begin integration a Tiger Team was formed to resolve the ram retention failures. JPL and Conax very effectively collaborated to investigate the root cause and options for preventing loose rams in the flight valves. What was eventually implemented was a very innovative (if decidedly inelegant) solution referred to as the "magnetic latch". While the body of the pyro valve was constructed of a non-magnetic stainless steel, the "flying ram" was constructed of a magnetic alloy. The valves were

flown in the configuration shown in Figure 5, with two powerful magnets restrained on the sides of the valve with a highly permeable bracket that completed the magnetic circuit.

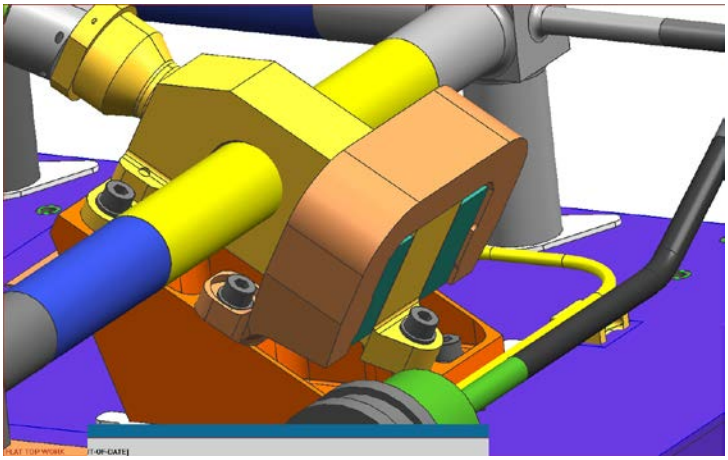

Figure 5. Magnetic Latch Assembled to High Flow Pyro Valve

Lessons that can be drawn from this effort include:

- Lack of management continuity in a development task can easily lead to errors and omissions that can significantly erode schedule. Corrective action should be insisted on as soon as such a pattern emerges.
- Heritage is an easily abused concept, and one must always be aware that small changes in design or application can have significant impacts.
- Development tests and qualification tests should not simply be evaluated with "pass/fail" criteria but thoroughly reviewed for marginal conditions or indications that could warn of low margin conditions and potential future failures. Long delay times and erosion of the conventional aluminum PCAs had been observed for a long time but not acted on as a sign of a marginal condition. Likewise, the witness marks in the based of the MSL high flow pyro valve bodies after development testing should have been a warning sign that the ram retention was suspect.

DESCENT RCS THRUSTER VALVE ISSUES AND LESSONS LEARNED

The MSL Descent RCS thruster/valve assembly was procured from Aerojet in Redmond, WA. It received a new designation, the MR-107U because of the higher operating pressures required for the MSL program compared to past applications and because it used a scarfed nozzle configuration unique to the MSL application. It also incorporated a new propellant valve, manufactured by ValveTech (VTI), that was also being incorporated into the MR-107S version of the thruster for another customer (Lockheed Martin). While the valve design was heavily based on designs previously developed by VTI, problems were encountered nonetheless.

The first attempt to qualify the valve encountered a failure due to a metal fragment that sheared off during valve assembly. The valve assembly process was revised to avoid this problem. The valve also experienced very slow closing response due to a Johansen block effect that required further design modifications to correct. The test unit also encountered leakage of the valve seals that was likely caused by the introduction of a one-piece plunger assembly that had inadequate venting of the space behind the elastomeric "puck" which provided the sealing surface. Venting was added and the design reverted to a two-piece plunger design used on previous

valves developed by VTI. VTI had moved to the one-piece plunger to improve manufacturability and this change had been inadequately vetted by Aerojet, JPL, and Lockheed, who collaborated on oversight of the valve development. Aerojet was the contractual customer who controlled any technical direction given to VTI.

Early testing of four valves prior to final closure welds indicated they had internal leakage (i.e., leakage through the valve seat) in excess of the specified value and out-of-family with VTI's historical experience with similar valves. VTI and Aerojet concluded that the leakage was in part due to stiffening of the seal caused by excessive puck "squeeze" introduced to try to improve retention of the seal following the earlier leakage incidents. The amount of puck "squeeze" was reduced and improved dimensional controls were put in place to make the squeeze more consistent. The support area behind the seal was also reduced to allow more seal deflection. This required rework of all of the poppet assemblies.

At the start of acceptance testing of the flight valves, 8 out of 13 units exhibited out-of-specification external leakage though the outlet fittings of the valve bodies. These were stainless steel piece parts and testing showed the leakage was through the parent metal rather than where they were welded to the rest of the valve body. As in the previously described HFPR issue, the root cause was traced to stringers in the bar stock from which the parts had been fabricated. This required remanufacture of the piece parts and rework of all of the valves. At this point the schedule was becoming critical and it was necessary to proceed to deliver the flight valves for integration into the thruster / valve assemblies before the valve qualification was completed.

When thruster / valve assembly hot fire acceptance testing was conducted the fifth unit tested experienced a "fail closed" failure when tested at high inlet pressure and temperature. It could be ascertained that the poppet of the valve was stroking to the open position, but no propellant flow occurred. The root cause is believed to be a combination of the large pressure differential across the valve seal at opening, softening and swelling of the seal material due to elevated temperature (and perhaps due to exposure to hydrazine) and inadequate seal retention, although VTI disputes the later. The fact that the MSL thruster was required to operate at a higher inlet pressure that the heritage designs was definitely a contributing factor. A joint VTI / Aerojet / JPL / Lockheed Martin Tiger Team met face-to-face at the VTI facility and formulated a series of valve design changes and screening procedures that were put in place. The valve design changes reduced the seal area across which differential pressure acts at valve opening and improved the retention of the seal puck. Additional screening testing was performed at the valve level as well as at the thruster / valve assembly level.

Following rework of the valves an expedited acceptance test was conducted in which some environmental testing originally planned was eliminated in order to make the schedule. Through a concerted effort at both VTI and Aerojet the DS RCS thrusters were delivered just in time to be integrated into the DS propulsion system, one of the last assemblies to be installed.

Lessons that can be drawn from this effort include:

- Valve design changes intended to improve manufacturability can have surprising unintended consequences and need to the thoroughly vetted by the customer.
- Early involvement of materials and process specialists should be encouraged to avoid problems with in-spec but abnormal material conditions and/or poorly conceived processes. Use of vacuum arc remelt material is encouraged.
- The ability of a valve design to perform under unique conditions imposed by a new application should be verified early in development. Very early in the valve devel-

opment JPL had recommended a test of the valve seal under conditions of high pressure differential and high temperature while exposed to hydrazine because of issues encountered on past programs. This was not done for budget and schedule reasons, although some testing of seal swell due to temperature was performed. A more complete developmental test might have avoided the valve failure at the thruster assembly level.

- Face-to-face meetings can be invaluable when collaborating on failure investigations and corrective actions.
- Valve designs (even heritage designs) should be rigorously evaluated as mechanical mechanisms. These reviews must drill down to the piece part level and not be limited to "viewgraph engineering" in order to be effective.

BIMETALLIC TRANSITION TUBE ISSUES AND LESSONS LEARNED

The DS propulsion system propellant tanks and lightweight filters were manufactured out of a titanium alloy to minimize mass. However, the remaining components and the system tubing were made from a stainless steel alloy that is not weld-able to titanium. It was therefore necessary to use bimetallic transition tubes to provide weld-able stainless steel tube stubs on the filters and propellant tanks. Such transitions tubes are commonly used in spacecraft propulsion systems. MSL required transition tubes in a variety of sizes larger than are normally used in spacecraft propulsion systems, but JPL did not perceive them to be a risk item and simply specified the stainless steel alloy required on the tube stubs and left it to the tank and filter manufacturers to provide the specified tube stubs rather than specifying how that was to be accomplished.

Dissimilar metal transition tubes for propulsion systems are primarily manufactured today by a process referred to as inertial welding, although it is more correctly referred to as a friction forging process since it is necessary that no melting occurs at the joint location to form a suitable joint. In the inertial welding processes used for the MSL transition tubes bars of the stainless steel alloy and the titanium alloy are pressed together while one side (and an attendant flywheel mass) is spinning. By controlling the speed, pressure with which the bars are pressed together, the flywheel inertia, and the shape of the interface a solid state joint is formed between the dissimilar metals. The resulting weldment is then machined into a hollow tube for welding onto the propulsion component.

The first indication of a problem with any of the MSL inertial welds came when one of the units being qualified for use on a filter failed to meet the tensile strength requirements specified by the filter manufacturer (Vacco Industries). Vacco demonstrated to JPL that even this failed unit met the strength requirements in our application with large margins. JPL engineering agreed with this assessment and in the process failed to make note of two critical facts: 1) the failed unit was well out of family, and no root cause for the failure had been determined, and 2) the failure had occurred precisely at the solid state joint, while a properly formed joint should have failed in the stainless steel tube stub.

Considerable time passed before another "opportunity" to question the integrity of the transition tubes arose. As described below, it was necessary to validate the flightworthiness of the DS tubing and fittings using a fatigue approach rather than the more customary approach of having healthy margins on yield. JPL was unable to locate any information on fatigue life of stainless steel-to-titanium inertial welds and so embarked on a test program to characterize the fatigue life. For a variety of reasons, this effort slipped significantly. Nearly coincident with the completion of the DS propulsion system assembly and test, two of the transition tubes undergoing fatigue

testing experienced failures on the first cycle at relatively low stress levels. Both failures appeared to have occurred right at the solid state joint rather than in the parent metal. A picture of one of the failed fatigue samples is shown in Figure 6.

These failures led to a detailed investigation into the integrity of all of the sizes of transition tubes used on the DS propulsion system. In all cases examples were found where failures from the lot acceptance tests had occurred right at the solid state joint rather than in the parent metal. Scanning Electron Microscope (SEM) examination of the failed joints revealed the formation of brittle intermetallic alloys, indicating that local melting had occurred during the forging process. This melting and formation of intermetallic alloys lead to an unsound joint. A SEM image of one such melt zone is shown in Figure 7.

Perhaps most disturbing, it was found that while at least one vendor of inertial weld joints routinely tested 10% of each lot for ultimate tensile strength, they did not reject the lot when units failed the tensile strength requirements. Instead, their practice was to test another unit from the lot as a stand-in for the failed unit. During JPL's investigation examples of these failures were found for all of the weldment lots used to fabricate the DS transition tubes. In all of those cases the failures had been at the solid-state joint and showed evidence of brittle intermetallic alloys under SEM examination. The tank and filter vendors received Certificates of Conformance (C of C) for these weldment lots indicating they met all requirements. However, the supporting data accompanying the C of C's reported the tensile test failures. It is clear that neither the vendors nor JPL penetrated beyond the C of C cover sheet.

Figure 6. Fatigue Test Sample Exhibiting Failure at Joint.

.

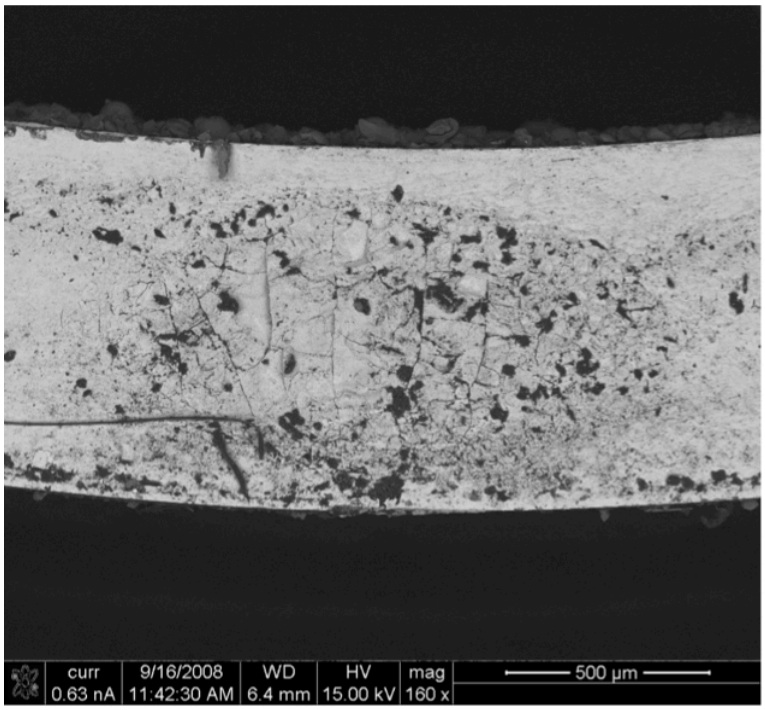

Figure 7. SEM Showing Melt Zone in Inertial Weld Joint

Another disturbing finding was that the staff at the interface welding vendor had been aware that the particular titanium alloy specified for the MSL weldments was not as suitable for forming robust weldments as a slightly different alloy that might have been used had the tank vendor, filter vendor, or JPL been aware of this fact. Unfortunately, it is likely that much of the information supporting this conclusion is held proprietary by one of their customers.

Ultimately, it was necessary to remove all of the bimetallic transition tubes from the DS propulsion system and by either replacing components (i.e., filters) with units using stainless steel bodies or using brazed dissimilar metal joints in place of the inertial welded units. This was an extremely expensive rework necessitated by inadequate penetration into what had been viewed as a commercial piece part.

Lessons that can be drawn from this effort include:

- Bimetallic transition tubes between dissimilar metals should be recognized as a significant risk item and their manufacturing and test should be closely monitored. Their procurement should not be deferred to components vendors unless it is verified that those vendors have the knowledge and tools required to do this monitoring.
- Any failures of weldment or transition tubes that occur at the solid state joint should be cause for rejection of the whole lot. Root cause should be determined and the process controls modified accordingly.
- Early involvement of materials and process specialists should be encouraged to avoid problems with in-spec but abnormal material conditions and/or poorly conceived processes. [This should sound very familiar by now!]

ISSUES AND LESSONS LEARNED RELATED TO SYSTEM CONFIGURATION AND TUBING SIZE

In conventional propulsion system designs internal pressure loads are the primary driver of the stresses in lines and fittings. Simple hand calculations suffice to show that loads induced by flight environments such as vibration and quasi-static accelerations are negligible. Propellant and pressurant lines in such systems are typically small enough to be significantly deflected by hand, so stresses caused be relative motions of propulsion assemblies at different parts of the structure do not induce significant stress levels.

The use of relatively large diameter lines in the DS propulsion system design resulted in the need to model the lines as part of the system structural model. The complexity of this task is illustrated in Figure 8, which shows the propulsion line routing over, around, and through the DS structure. The purple lines in Figure 8 are routed to the MLEs, the green lines are routed to the RCS thrusters, the blue lines are between the propellant tanks and the pyro valve assemblies, and the yellow lines are for pressurant.

The line stress analysis showed that there were numerous locations within the feed system where the conventional factors-of-safety on yield could not be met, and it was necessary to resort to fatigue life assessments. Experimental testing was done to confirm the material fatigue life predictions in the complex stress state typical of bent tubing under cyclical loading. The setup for one such test is shown in Figure 9. More detail on the line layout and stress analysis is provided in References 13 and 14.

In addition to the complexity of the stress analysis, the nature and scope of the work required was not fully appreciated until very late (essentially coincident with the propulsion subsystem Critical Design Review). The analysis led to many changes to line routing and the location and strength requirements for line supports. Design changes were in fact being defined even as the DS propulsion assembly was underway. In many cases it was necessary to assemble the system with non-flight line supports while the design and fabrication of the flight parts was completed.

Another issue introduced by the scale of the MSL DS system was the potential for significant water hammer when the RCS thrusters were operated during entry. Extensive testing was done to evaluate this and a mitigation technique was developed[15] to avoid large water hammer excursions. Effects of water hammer on line mount loads were fed back into the structural analysis as well.

Lessons that can be drawn from this effort include:

- When propulsion lines are large enough to have stiffness comparable to that of the structure it is possible to induce very large stresses that are difficult to model.
- If possible, either the structure should be stiffened or compliant elements should be introduced to the feed system to minimize stress levels.

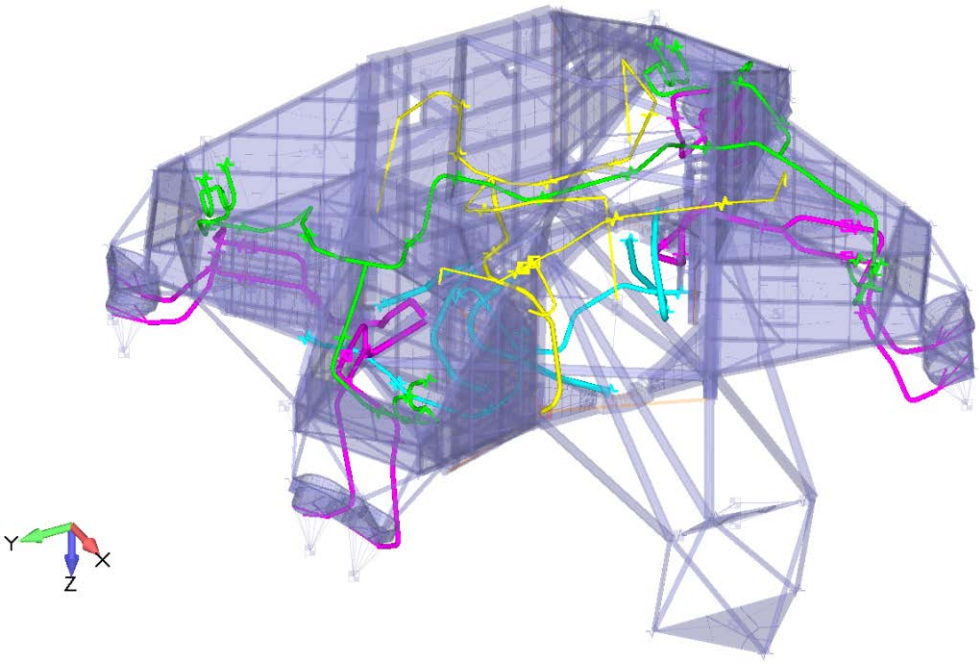

Figure 8. MSL DS Propulsion Lines.

Figure 8. Propulsion Line Fatigue Testing.

CONCLUSION

The development of the MSL Descent Stage Propulsion system was an exceedingly complex task requiring numerous new developments. Various challenges that arose and were overcome at the component and system level were a fertile source of lessons learned for future developments. It is hoped that the descriptions in this paper and the associated references will be of use to the community at large.

ACKNOWLEDGMENTS

The research described in this paper was carried out at the Jet Propulsion Laboratory, California Institute of Technology, under a contract with the National Aeronautics and Space Administration.

The authors would like to acknowledge the following members of the MSL DS propulsion team for their leadership in the development efforts described in this paper: Ray Baker and Ron Carlson for leading the MLE and TVA developments; Masashi Mizukami for leading the HFPR and pyro valve efforts (with outstanding support from Adam Pender of Lockheed Martin); Frank Picha for leading the RCS development; Tom Rust for invaluable materials and process guidance, and Art Casillas for cross-cutting analysis and test activities We would also like to thank the many, many employees of our component suppliers without which this effort would not have been possible.

REFERENCES

[1] Prakash, R.; Burkhart, P.D.; Chen, A.; Comeaux, K.A.; Guernsey, C.S.; Kipp, D.M.; Lorenzoni, L.V.; Mendeck, G.F.; Powell, R.W.; Rivellini, T.P.; San Martin, A.M.; Sell, S.W.; Steltzner, A.D.; Way, D.W "Mars Science Laboratory Entry, Descent, and Landing System Overview," 2008 IEEE Aerospace Conference, Paper No. 1095-323X, March 2008.

[2] Weiss, Jeffrey and Carl Guernsey, "Design and Development of the MSL Descent Stage Propulsion System," AAS Paper No. 13-458, 23rd AAS/AIAA Space Flight Mechanics Meeting, February 2013

[3] Morrisey, D. C., "Historical Perspective: Viking Mars Lander Propulsion," J. Propulsion and Power, Vol 8, No 2, April 1992

[4] Dawson, M., G. Brewster, et al, "Monopropellant Hydrazine 700 lbf Throttling Terminal Descent Engine for Mars Science Laboratory," AIAA Paper 2007-5481, July 2007.

[5] Kesten, A. S., and P. J. Marteney, "Internal Catalyst Breakup Phenomena," AFRPL-TR-75-68, Dec 1975.

[6] Kesten, A. S., "Theory and Intuition in Hydrazine Reactor Technology," AIAA paper 77-845, July 1977.

[7] Luce, K. and P. Kerl, "Mars Science Laboratory Descent Engine Throttle Valve Assembly for Propellant Supply," 54th JANNAF Propulsion Conference, May 14-17, 2007

[8] Mizukami, et al, "Shuttle 750 psi Helium Regulator Application on Mars Science Laboratory Propulsion," AIAA Paper 2009-5489, August 2009.

[9] Hurlbert, E. and Abe, J. T., "Methods Used to Investigate and Resolve the Space Shuttle Helium Pressure Regulator Instability," AIAA-90-2749, 1990.

[10] Hagopian, M., S. McDougle, and R. Saulsberry, "NESC Independent Assessment of Pyrovalve Ground Test Anomalies," AIAA paper 2008-4798, July 2008.

[11] Zenz, Z. D., S. W. Schummer, A. Pender and M. Mizukami, "Stainless Steel Primer Assemblies for Dual Initiated Pyrovalves," JANNAF Joint Subcommittee Meeting, December 2008.

[12] R. L. Saulsberry, et al, "Innovative Comparison of Transient Ignition Temperature at the Booster Interface, New Stainless Steel Pyrovalve Primer Chamber Assembly "V" (PCA) Design versus the Current Aluminum "Y" PCA Design," AIAA Paper 2011-5732, August 2011.

[13] Etters, A, M. Rober, D. Lee, C. Guernsey, M. Long, and M. Knopp, "Mars Science Laboratory Descent Stage Propulsion Tubing Configuration and Design," 2009 IEEE Aerospace Conference, March 2009.

[14] Lee, D. S., G. Wang, and L. Long, "Design Loads Analyses and Structural Analyses of MSL Propulsion Lines," Spacecraft and Launch Vehicle Dynamic Environments Workshop," June 2008.

[15] Casillas, A. R. and C. Guernsey, "MSL Water-Hammer Mitigation Strategy," JANNAF Joint Subcommittee Meeting, December 2008.