Automatic Focusing for a 675 GHz Imaging Radar with Target Standoff Distances from 14 to 34 Meters

Adrian Tang[1], Ken B. Cooper[1], Robert J. Dengler[1], Nuria Llombart[2], and Peter H. Siegel[1]

[1]*Jet Propulsion Laboratory, California Institute of Technology*

[2]*Universidad Complutense de Madrid, Madrid, Spain.*

***Abstract* — This paper discusses the issue of limited focal depth for high-resolution imaging radar operating over a wide range of standoff distances. We describe a technique for automatically focusing a THz imaging radar system using translational optics combined with range estimation based on a reduced chirp bandwidth setting. The demonstrated focusing algorithm estimates the correct focal depth for desired targets in the field of view at unknown standoffs and in the presence of clutter to provide good imagery at 14 to 30 meters of standoff.**

Index Terms — Automatic Focus, THz Imaging Radar

I. Introduction

Stand-off concealed weapons detection through clothing from 25 m range using a 675 GHz frequency modulated continuous wave (FMCW) imaging radar has previously been demonstrated at the Jet Propulsion Laboratory [1,2]. While both the cm-scale cross resolution (attained using a 675 GHz carrier) and the cm-scale depth resolution (provided by the high 28.8 GHz chirp bandwidth) are sufficient for detection of concealed objects under clothing, operating over a range of target standoff distances has remained challenging. As a focused radiation beam will diverge beyond its focal point, the radar's optics are limited to providing high cross resolution for only a small span of standoff ranges, or focal depth. This is illustrated in Fig. 1, where a ray diagram is shown for two different focal points, and their corresponding focal depths with a given cross-resolution requirement.

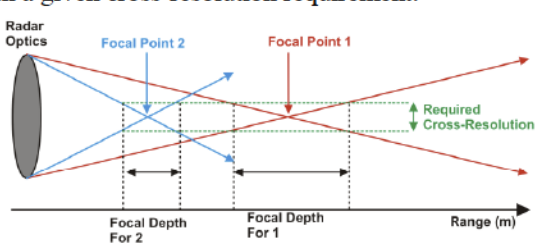

Fig. 1. Focal depths of optics for two different focal points.

Previously it was demonstrated that translation of the 675 GHz radar's front-end beam horns relative to its focusing optics is able to move the position of the focal point over a wide range of stand-off distances from 12.5-37.5 meters [3]. However the practical problem remains of determining which focal distance is correct for a given target in the field of view whose range from the radar is not known a priori. Choosing the incorrect focal point has a major impact on the overall performance of an imaging radar system. For example, in Fig. 2 we focus the imaging radar system for a 25 meter standoff and then introduce a mannequin with several PVC pipes (representing an improvised explosive device) concealed under a light jacket. When the mannequin is placed at 25 meters the pipes are clearly visible, but when moved to 28 meters (beyond the focal depth) without translating the front-end beam horns to compensate, the image quality degrades substantially.

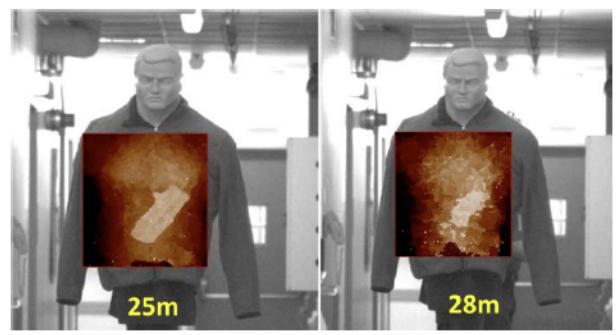

Fig. 2. Image captures of a mannequin with PVC pipes concealed under a light jacket positioned at both 25 meters and 28 meters when the radar itself is focused at 25 meters.

II. SNR Based Focusing Estimation

The most obvious approach to focus on the target would be to optimize the received SNR. Conceptually as the radar beam

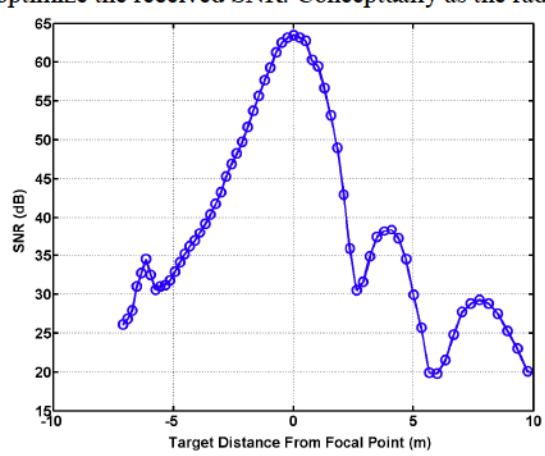

Fig. 3.Signal to noise ratio returned from a metallic sphere as the distance from the radar's focal point is varied.

becomes more focused onto the target, the surface roughness will have less of an effect on the specular direction, returning a larger SNR. Figure 3 plots the SNR (excluding transmitted

carrier noises) returned from a small metallic sphere positioned in a long hallway as the distance from the focal point is varied over several meters. While it is true the SNR does peak once the radar is focused on the target, several other maximums exist due to clutter in the foreground and background, making optimization difficult. In the case of dimmer targets with less reflectivity, these alternative SNR maximums from clutter may be higher than the SNR of the desired target, limiting the success of this approach.

III. LOW BANDWIDTH CHIRP RADAR FOCUSING ESTIMATION

Shown in the block diagram of the radar system (Fig. 4), the radar chirp source sweeps from 1.8-3.4 GHz and is first mixed with both a 35 GHz transmitter LO and 34.8 GHz receiver LO. The cross-mixer at point "A" is used to derive the down-conversion LO used at the receiver by extracting the 200 MHz difference and applying a frequency multiplication factor of 18. Generating the down-conversion LO in this fashion allows for some phase noise cancellation advantages which are described in reference [1].

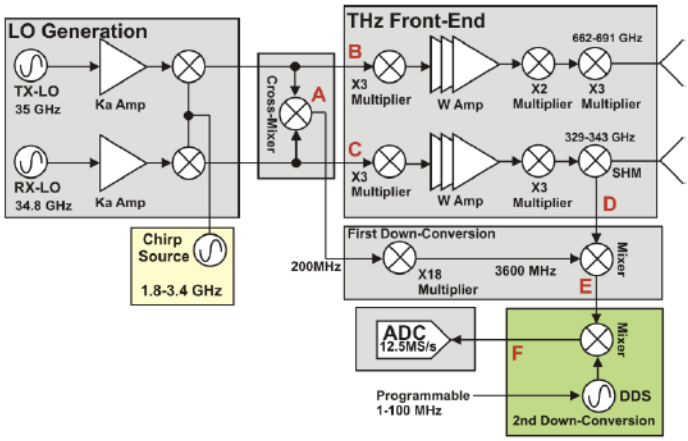

Fig. 4. Block Diagram of existing 680 GHz Imaging Radar.

Both the 35 and 34.8 GHz carriers enter the THz front-end at points B & C respectively and are frequency-multiplied to provide a 662-691 GHz transmit sweep, and a 329-343 GHz receiver LO sweep. The receiver is implemented as a THz sub-harmonic mixer and is sensitive to the second harmonic of its LO (658-688 GHz). As the transmit sweep and receive sweep have a fixed frequency difference of 200 MHz and this difference will also be multiplied by 18, a 3.6 GHz offset is produced at the SH-mixer output (point "D"). This offset is then removed by the first down-conversion mixer with the LO derived from the cross-mixer at point "A" as mentioned above. The 18X multiplication factor leads to an overall radar bandwidth of 28.8 GHz with a designed chirp time of 80 us, providing a range-to-IF frequency scaling β, of approximately 2.4 MHz per meter of target distance. While suitable for detecting objects hidden under clothing where the entire scene's range diversity is well under 1 meter, the absolute frequency offset from several meters standoff still lies well beyond the effective 6.25 MHz signal bandwidth of our ADC (note: this effective bandwidth includes baseband decimation). For example a target at 10 meters will produce a signal at 24 MHz after the first down-conversion (point "E"). For this reason it is necessary to remove a large portion offset by a second down-conversion LO with an adjustable frequency that can be set to match the range of the target. If the 2nd LO frequency is not correctly set, the returned signal from the target will land outside the ADC detection bandwidth, causing no image to be captured. The radar uses a DDS-based LO for this second down-conversion, with a frequency which was set manually prior the work discussed in this paper.

An alternative to using SNR based focusing, is to use the radar's ranging capabilities to provide the range estimate of the target for focusing the front-end optics and setting the second down-conversion's LO frequency. In order to accomplish this we must first modify the radar system so that targets placed anywhere within the desired 14-24 m depth of focus will return signals within the ADC bandwidth. To do this we first reduce the chirp bandwidth by a factor of 15, reducing β to 160 KHz per meter. Considering the endpoints of the standoff ranges and a 2 meter added offset due to the path length of the optics themselves, a 14 meter range corresponds to an IF frequency shift of 2.56 MHz, while a 34 meter range yields an IF frequency shift of 5.76 MHz. These parameters offer a total IF signal span that fits within our available 6.25 MHz processing bandwidth, B_p. As the 2nd down-conversion LO is still in the signal path and cannot be set to DC, we instead set it to 7.8 MHz and consider the lower sideband mixing product which will be from 2.04 MHz to 5.24 MHz. Under this operating condition we can now directly estimate the range to the target R_e,using the radar system and then set the 2nd down-conversion LO frequency f_{DDS} to

$$\mathbf{f_{DDS} = \beta R_e - B_p/2.}$$

This places the returned signal directly in the center of the ADC bandwidth. Note the β used is the 2.4 MHz/m value during regular imaging operation. Secondly, by using a pre-measured lookup table or polynomial fitting for the optimum position of the translational optics at each target range, the focus can be set directly once the range estimate is obtained.

As the correct focus is undetermined during this initial ranging estimation and the returned SNR may be too low for a reliable range estimation in the unfocused condition, we also command the translational optics to continuously cycle between end-points while searching for a returned signal. As the chirp time is only 80 μs this 2 second cycle allows many samples to be taken at each focal depth the target's signal is searched for. Note that the movement of the optics has limited impact on the ranging estimate as the translation distance (approximately 20 cm) is much smaller than standoff distance to the target of at least 14 meters.

IV. FOCUSING ESTIMATION IN CLUTTERED ENVIRONMENTS

While the solution for estimating the standoff range using the radar system is robust and often operates well in practice, one problem which still exists is ensuring the radar is pointed at the correct target to be imaged when estimating the standoff range. In a highly cluttered environment (indoors for example) the radar receives many return signals from other objects in the scene, especially when the beam is unfocused, making it difficult to know exactly what target is being detected. These other objects may be brighter, larger, or more specular than the desired target, making the SNR an unreliable selection criteria. For example Fig 5. shows the IF spectrum when the radar is in the low-bandwidth configuration and is pointed directly at our mannequin target positioned 25 meters down a hallway. When the radar is not focused, clutter signals appear from surrounding foreground and background objects, some which may be stronger than the return from the desired target, making it unclear which signal should be used for the range estimate. Signals from objects far beyond the target may also alias back into the detection bandwidth on the alternate or image sideband of the second down-conversion LO.

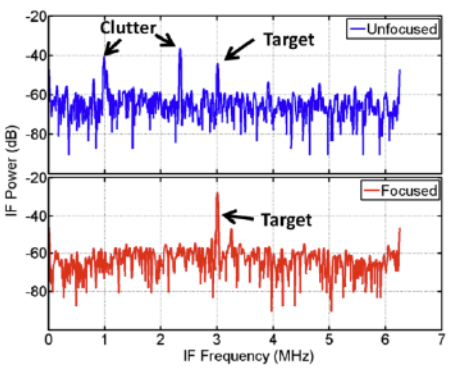

Fig. 5. Radar IF spectrum for the focused and unfocused condition when ranging a suspect in a hallway from 25 meters away.

One way to overcome this difficulty is to first consider the situation when the radar is correctly focused on the target. Under this condition all of the beam power will strike the target and be reflected from the same range. The focused condition spectrum shown in Fig. 5 agrees with this observation. Note the energy at the endpoints is a result of a DC offset and is ignored by the radar system. As the position of the translational optics is already cycled during the standoff range estimate to ensure enough target SNR exists, the radar will be correctly focused on the target for some unknown portion of the cycle time. This knowledge can be exploited by continuously looking for a spectral condition where only 1 bright return signal exists as the translation optics are cycled between endpoints. Once this condition is met the lone bright signal can be used to estimate the range to the target, the translational optics can be moved into the correct position, and the correct second down-conversion LO frequency can be set. To demonstrate the capability of the described radar focusing algorithm we again placed our mannequin at distances of 14 m, 25 m, and 30 m from the radar system. We then ran the described focusing algorithm and once complete, restored regular radar settings with 28.8 GHz chirp bandwidth. Finally we captured through-clothes images with the focus and LO settings chosen by the algorithm. Fig. 6 shows the resulting image captures for the 3 standoff ranges. As seen the cross-resolution and depth contrast of the imagery remains good at all 3 ranges. Note that due to the fixed aperture size, optical diffraction of the radar beam will lower the cross-range resolution as the standoff distance is increased.

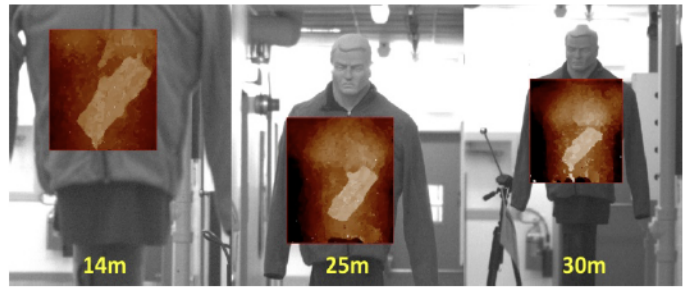

Fig. 6. Image captures of an mannequin with concealed PVC pipes with focus and LO settings chosen by the focusing algorithm for targets at 14 meters, 25 meters, and 30 meters.

V. SUMMARY

We have described the effects of limited focal depth on the operation of a 675 GHz imaging radar system for concealed weapons detection and discussed why SNR alone is not a suitable indicator for detecting focused conditions. We have described an algorithm to optimize LO and translational optics settings to achieve good imagery across a wide range of standoff distances. The algorithm uses a reduced radar chirp bandwidth combined with detection of spectral conditions to estimate the standoff range of a target within the field of view.

ACKNOWLEDGEMENT

Part of this work was carried out at the Jet Propulsion Laboratory, California Institute of Technology, under a contract with the National Aeronautics and Space Administration.

REFERENCES

[1] K. B. Cooper, R. J. Dengler, N. Llombart, B. Tomas, G. Chattopadhyay, and P. H. Siegel "THz Imaging Radar for Standoff Personnel Screening" IEEE Trans. Terahertz Sci. and Tech, Vol. 1, No. 1, Sept 2011, pp 169-182.

[2] K. B. Cooper, J. Trabert, R. J. Dengler, "Carrier noise-limited penetration in THz radar imaging"" IEEE IMS, 2012, Montreal, June 2012.

[3] N. Llombart,K. Cooper, R. Dengler, T. Bryllert, P.H. Siegel," Confocal Ellipsoidal Reflector System for a Mechanically Scanned Active Terahertz Imager", IEEE Trans. Antennas and Propagation, Vol 58, No 6, June 2010.