A Dual-Chamber Hybrid Inflatable Suitlock (DCIS) for Planetary Surfaces or Deep Space

A. Scott Howe, PhD[1]
Jet Propulsion Laboratory, California Institute of Technology, 4800 Oak Grove Drive, Pasadena, CA 91109

Kriss Kennedy[2], Peggy Guirgis[3], Robert Boyle[4]
NASA Johnson Space Center, 2101 Nasa Parkway, Houston, TX 77058

NASA HDU Project Management Team[5]

The Habitat Demonstration Unit (HDU) Project in conjunction with the NASA Extravehicular Activity (EVA) team has identified a need for a hybrid inflatable and hard shell suitlock that can be used for planetary surface and deep space human exploration missions. Through ongoing analog studies at NASA Desert Research and Technologies Studies (D-RATS) and in NASA's Prototyping Testbed Facility, it has been determined that a compactly stowed, deployable suitlock unit is needed to accommodate advanced EVA egress and ingress operations for various environments with only minor modifications.

The Dual-Chamber Inflatable Suitlock (DCIS) consists of three hard in-line bulkheads, separating two cylindrical membrane-walled compartments. A dual-compartment suitlock will allow for dust and contaminant control, suit maintenance, and efficient egress / ingress; and the inflatable aspect of the design will allow the unit to stow in a compact package for transport. This paper describes the DCIS functionality, subsystems, and operational scenarios.

The novel concepts included in the DCIS are the triple bulkhead, dual-chamber that has one compartment that is continuously pressurized (either at cabin pressure, or may be used for transitional pressure from high-pressure habitats), and a nominal unpressurized second compartment where the suits will be kept for normal operations. The advantages include quicker egress / ingress, capacity for 'shirt sleeve' suit maintenance, and portability of the entire unit.

Nomenclature

D-RATS	=	NASA Desert Research and Technology Studies analog field tests
DCIS	=	Dual-Chamber Inflatable Suitlock
DSH	=	Deep Space Habitat
ECLSS	=	Environmental Control Life Support System
EVA	=	Extra-Vehicular Activity: crew activity occurring outside pressurized living environment
HDU	=	Habitat Demonstration Unit project
ISS	=	International Space Station
MMSEV	=	Multi-Mission Space Exploration Vehicle
NEEMO	=	NASA Extreme Environment Mission Operations analog field tests

[1] Senior Systems Engineer, Space Architect, a.scott.howe@jpl.nasa.gov, AIAA Senior Member.
[2] Space Architect, kriss.j.kennedy@nasa.gov
[3] Aerospace Engineer, peggy.l.guirgis@nasa.gov
[4] Aerospace Engineer, robert.m.boyle@nasa.gov
[5] NASA Habitat Demonstration Unit (HDU) Project Management Team consists of Kriss Kennedy (Project Manager, JSC), Amanda Lynch (Project Integration, JSC), Larry Toups (Mission Architecture Manager, JSC), Tracy Gill (Systems Integration Manager, KSC), Terry Tri (Demo Unit Integration Manager, JSC), Ed Walsh (Assembly Integration Manager, JSC), David Smitherman (2nd Gen Definition Manager, MSFC), Sotirios Liolios (Test Operations Manager, JSC), and Scott Howe (Design Integration Manager, JPL)

I. Introduction

EXPLORATION habitats to support crew on long human explorations into space will require more capability than the current state-of-the art on the International Space Station (ISS). These long exploration missions need capabilities to ensure the physiological and psychological well-being of the crew and highly reliable, robust, and autonomous operating systems. All aspects of a deep space habitat need technological and innovative solutions to enable lighter, less power-hungry, and higher performing components. As part of the efforts to create a development process that eventually can more cheaply result in robust flight-like equipment, NASA has established a rapid prototyping work environment where functional hardware is quickly designed, built, and put through simulated missions in earth analog environments. The hardware is tested in locations as diverse as the Arizona desert at the NASA Desert Research and Technology Studies (D-RATS) field tests, and in Florida at the NASA Extreme Environment Mission Operations (NEEMO) test locations.

Figure 1: HDU module (photograph) during mission analog at NASA D-RATS 2010 field tests

The HDU project consists of a multi-center team brought together in this rapid prototyping tiger-team approach to quickly build, test, and validate hardware and operations in the analog environments. The project integrates operational hardware and software to assess habitat and laboratory functions in an operational prototype unit. The HDU project began in 2009, resulting in an analog of a Pressurized Excursion Module (PEM) laboratory for simulating a lunar habitat for the 2010 NASA D-RATS field analog (Figure 1). The initial elements included a 5-meter diameter hard shell vertically oriented one-story cylindrical module with four side hatches as docking ports for support modules, analog rovers, spacecraft, and other mission elements. With a portable base configuration compatible with multi-mission architecture, various teams from all over NASA have brought their technologies into the HDU shell to participate in a functionally integrated environment. Extra-Vehicular Activity (EVA), power, communications, Environmental Control and Life Support Systems (ECLSS), dust management, avionics, human factors, and many other teams have contributed technologies that have been maturing in laboratories around NASA,

but have heretofore not had a common portable platform that would allow them to come together in an integrated manner. For 2011 NASA is building and testing a Habitat Demonstration Unit Deep Space Habitat (HDU-DSH) habitat/laboratory, using the 2010 configuration and technologies as a foundation, that will be utilized to advance NASA's understanding of alternative mission architectures, requirements definition and validation, and operations concepts definition and validation (Figure 2). The HDU-DSH will support a crew of 3-4 for a minimum of 14 days and up to 30 days.

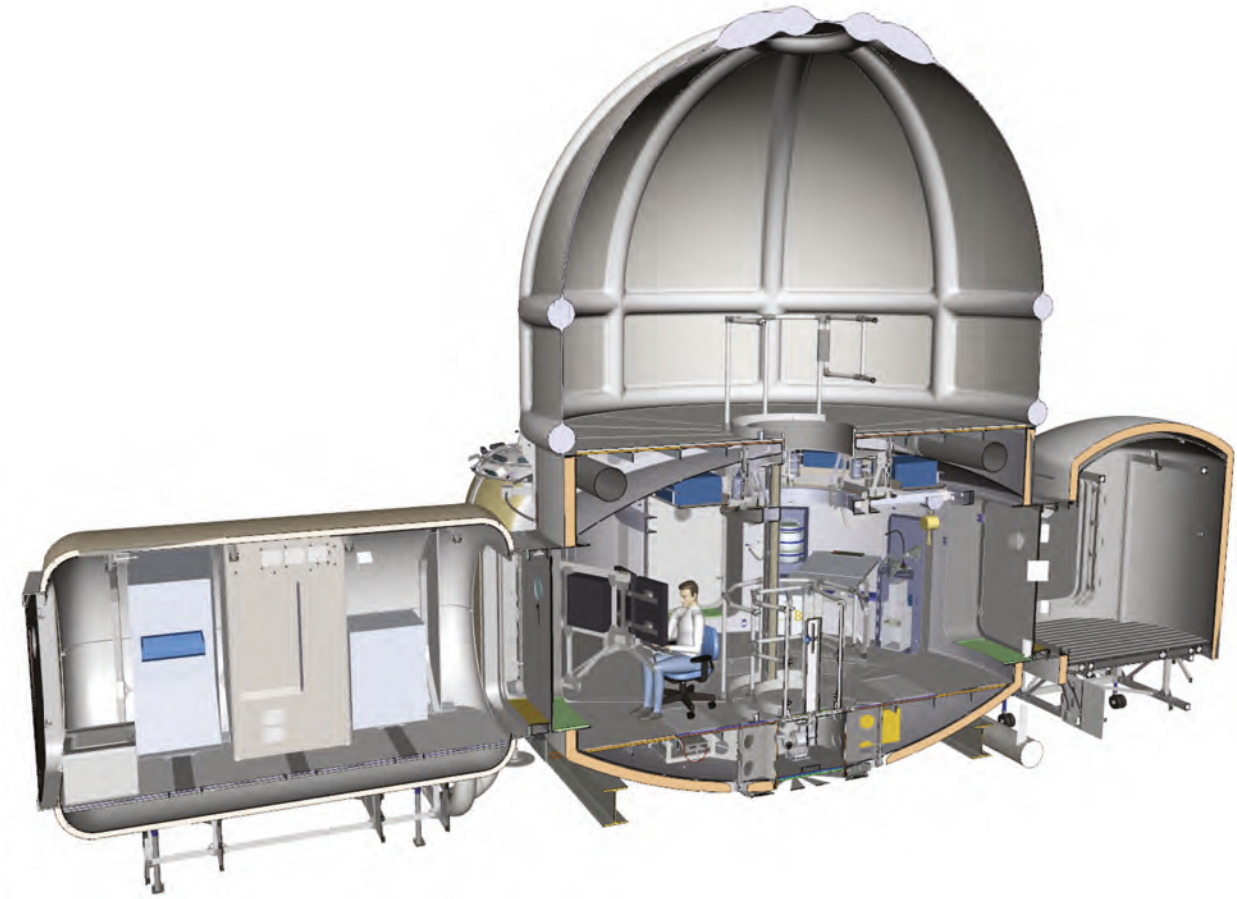

Figure 2: HDU Deep Space Habitat (DSH) configuration for NASA D-RATS 2011 field tests

II. Suitlock Concept

The HDU project and NASA EVA team has determined there is a need for an improvement over current NASA EVA technology, such as that used in the International Space Station (ISS) Joint Airlock 'Quest' module. Griffin (2009) performed a detailed study on various forms of airlocks, giving advantages and disadvantages based on Concept of Operations ("conops") scenarios. Cohen (2001) also discusses airlocks for pressurized rovers, and engaged in some of the original research and patents for suitport technology (Cohen 1989; Cohen 1995), which allows for egress and ingress with very little loss of air during the egress unpressurization stage. The NASA EVA team has built upon these concepts, incorporating suitport technology into small pressurized rovers, however, the need for an airlock function for maintenance and logistics reasons has remained. The combined HDU project and EVA team has determined that the technology must allow the capacity for quicker, more efficient egress / ingress, allow for 'shirt sleeve' suit maintenance, be compact in transport, and be applicable to both planetary surface partial-g and orbital or deep space zero-g environments. The technology must also be resistant to dust and other foreign contaminants that may be present on or around a planetary surface or NEO bodies. The technology should be portable, and be capable of docking with a variety of habitats, ports, stations, vehicles, and other pressurized modules. A Dual-Compartment Inflatable Suitlock (DCIS) design will allow for dust control, suit maintenance, and efficient egress / ingress, and the inflatable aspect of the design will allow the unit to stow in a compact package for transport (Figure 3).

A. Architecture Design Approach

This concept for a DCIS first came about during Lunar Surface System outpost design studies, where the team realized the need for a collapsible, portable airlock that could be relocated to various hatches on demand. Pressure suits docked externally, directly to the rear bulkhead of the Lunar Electric Rovers would have been exposed to lunar dust. An unpressurized "dust cabana" was developed that would protect the suits from dust exposure, but it was thought that a pressurized chamber with maximal dust control might also allow for shirtsleeves maintenance of the suits. During design exercises for an ISS-based inflatable habitat flagship project, the first dual-chamber inflatable suitlock was proposed that was flexible enough to be used on both planetary surfaces and deep space.

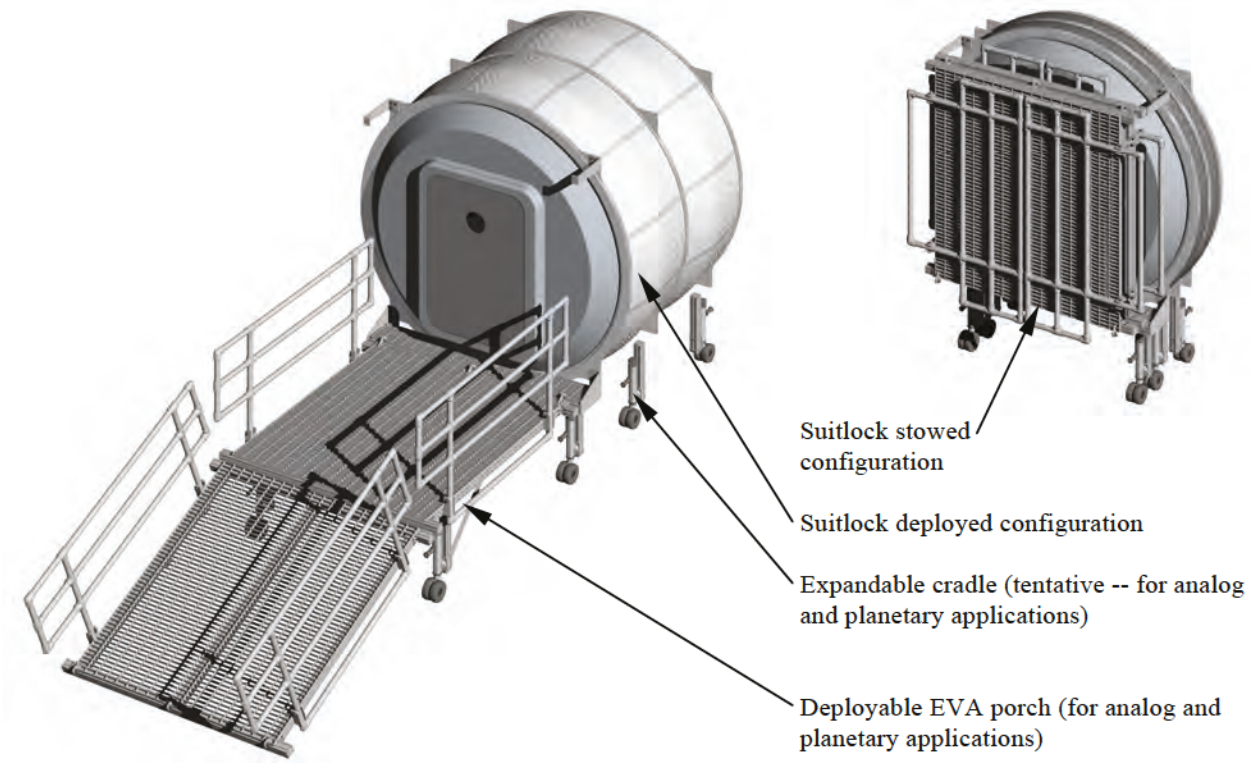

Figure 3: Suitlock in deployed configuration (left), and stowed configuration (right)

B. Top-level Assumptions

It is assumed that the DCIS will provide EVA capability for the immediate vicinity of the habitat, mothership, or deep space exploration vehicle stack. The DCIS would provide EVA functionality in situations where other EVA elements, including Multi-Mission Space Exploration Vehicle (MMSEV) are not present or available. The DCIS can also function as a 'shirt sleeve' garage or maintenance shed even when other EVA elements are available.

C. Concept of Operations (Con Ops)

The DCIS can be converted between two modes of operations: as a dual-compartment EVA work platform "Suitport Mode"; or reconfigured into a "Large Volume Airlock Mode" as required (Figure 5).

Suitport Mode: During nominal use, the Inner Chamber will remain pressurized at cabin pressure, or at a reduced pressure as a transition from cabin to environmental suit pressure (Figure 8). EVA egress / ingress will occur through the suitlocks, while the Outer Chamber remains in vacuum. For occasional shirtsleeves maintenance capacity, the Outer Chamber will also be pressurized, allowing the environmental suits to remain in their mounted states while being worked on.

Large Volume Airlock Mode: In cases where large equipment must be disassembled and repaired, the Middle Bulkhead can be removed off to the side to open up and combine both chambers into a single chamber (Figure 9). The current design still requires a mullion in the middle to fully engage the middle bulkhead halves as large pressure hatches, but the larger volume would then be available as a maintenance airlock.

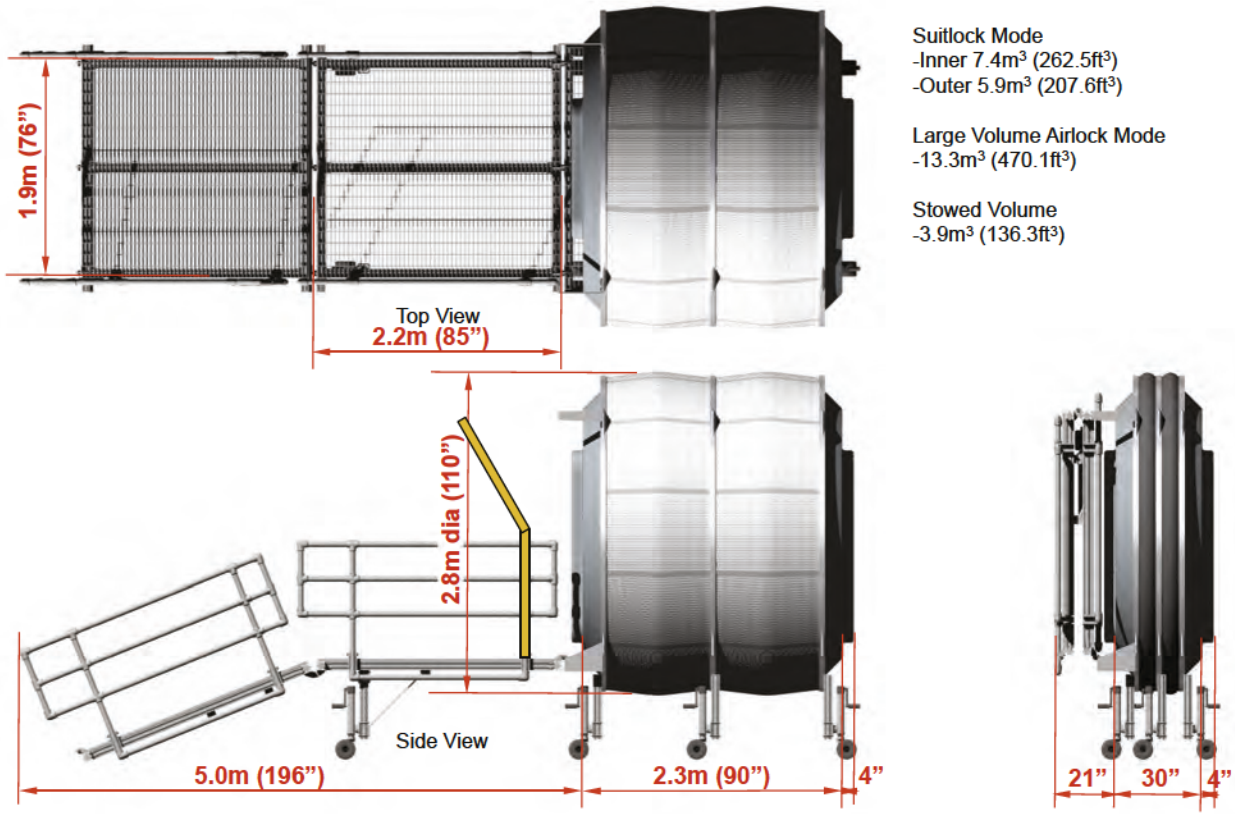

Figure 4: DCIS rough element sizing (approximate)

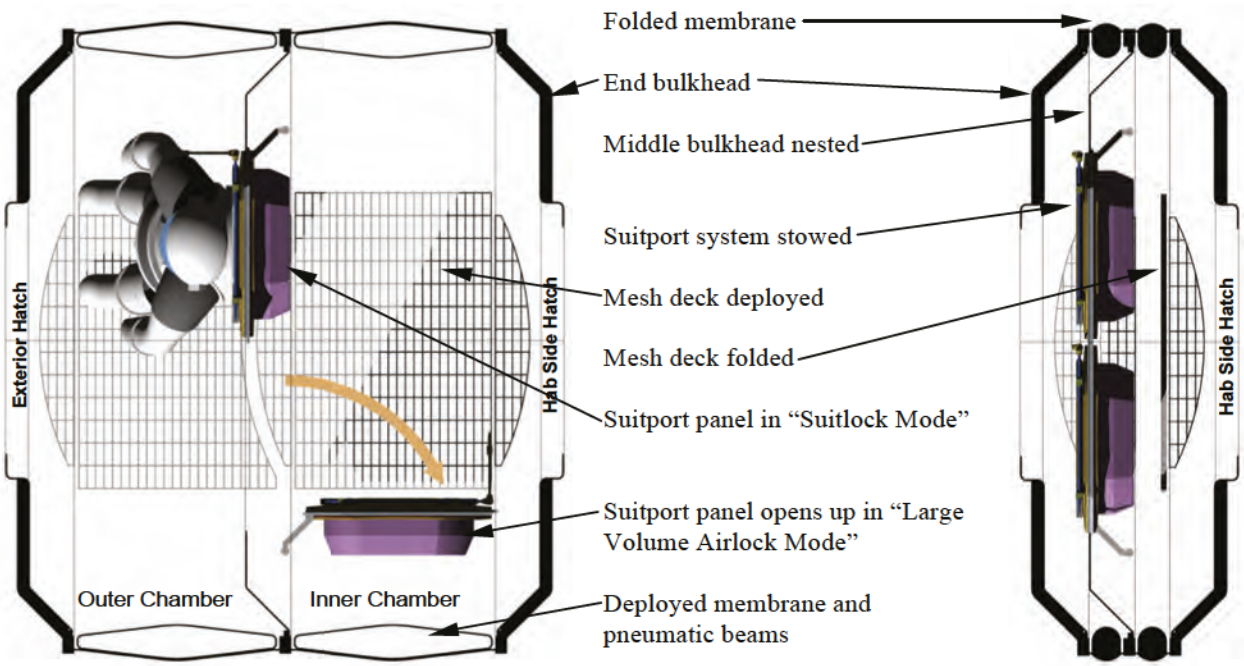

Figure 5: Top view showing DCIS internal reconfigurability (left), and in stowed configuration (right)

III. Design and Configuration

The DCIS consists of three hard in-line bulkheads, separating two cylindrical membrane-walled compartments (Figure 4). The Inner Bulkhead can be fitted with a variety of hatch types, docking flanges, and mating hardware, such as the Common Berthing Mechanism (CBM), for the purpose of mating with vehicles, habitats, and other pressurized modules.

A. Dual Chamber Concept

The Inner Bulkhead and Center Bulkhead function as the end walls of the Inner Compartment, which during operations would stay pressurized, either matching the pressure of the habitat or acting as a lower pressure transitional volume. The Inner Compartment contains donning / doffing fixtures and inner suitport hatches. The Center Bulkhead has suitports mounted to it, and has a maintenance hatch. The Center Bulkhead and Outer Bulkhead function as the end walls of the Outer Compartment, which stays at vacuum during normal operations. This allows the suited crew member to quickly donn a suit, and egress the suitlock without waiting for the compartment to depressurize. The Outer Compartment can be pressurized infrequently during off-nominal suit maintenance tasks, allowing 'shirt sleeve' inspections and maintenance of the environmental suits. The Outer Bulkhead has a pressure-assisted hatch door that stays open and stowed during normal operations, but can be closed for suit maintenance and pressurization.

B. Hybrid Structure

The three bulkheads, Inner, Middle, and Outer are designed to be hard bulkheads mounted to interface compression rings that clamp the pressure barrier and have mounting hardware for the inflatable restraint layer and pneumatic beams. In the "Suitport Mode", the pressurized Inner Compartment will maintain its shape due to the cabin pressure, while the Outer Compartment being in vacuum or native low-pressure atmosphere (as in the case of Mars) would maintain its volume using self-supporting pneumatic beams. In the "Large Volume Airlock Mode", both Inner and Outer Compartments are merged into one larger compartment and thus will alternatively be fully pressurized or will need pneumatic beams for the Inner Compartment as well. At this stage in the DCIS development, it is not known whether the Pneumatic Beam or Stacked Tube approaches hold an advantage over one another.

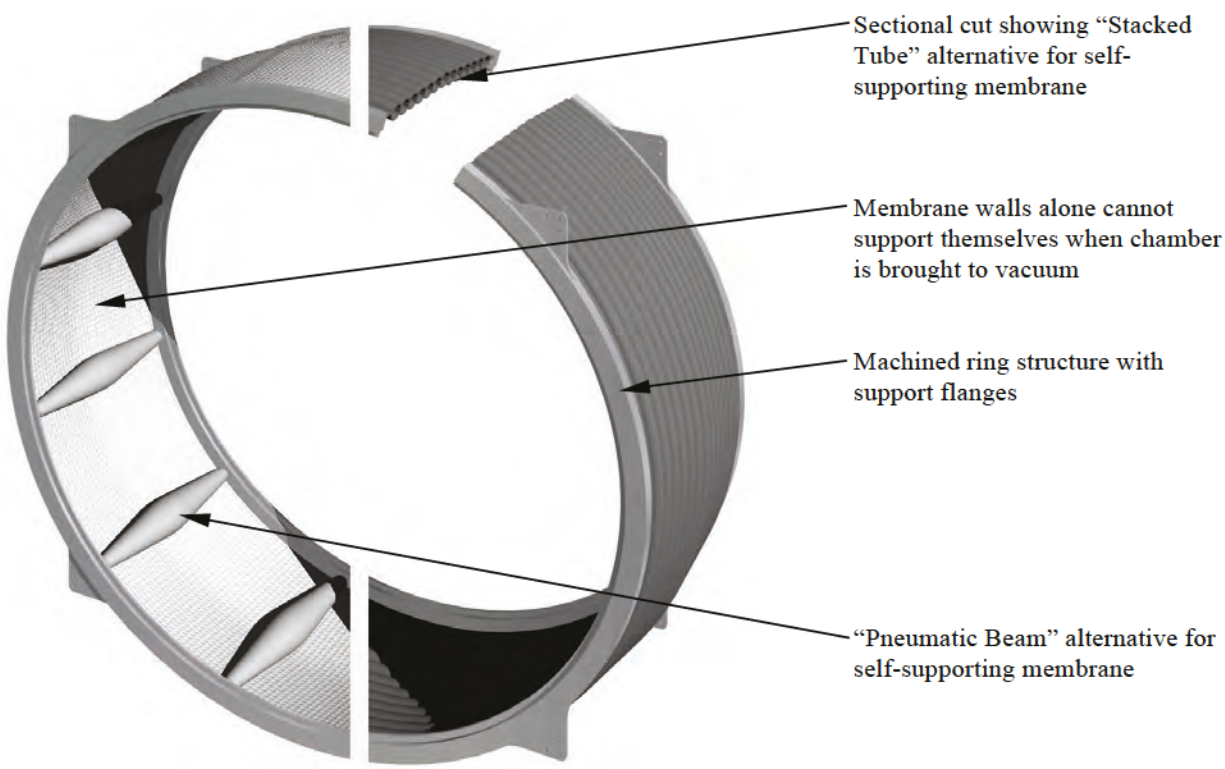

Figure 6: Two alternatives for self-supporting membranes: Pneumatic Beams (left), or Stacked Tubes (right)

C. Suitport Integration

The suitport uses a rear-entry environmental suit, where the Primary Life Support System (PLSS) backpack becomes a hatch to enter the suit. For the suitport, the PLSS backpack, combined with an inner hatch cover, also functions as a hatch through an external bulkhead into the pressurized cabin interior. When the suit is detached, the inner hatch cover seals against the bulkhead to maintain the pressurized environment inside the cabin. In this way, the volume of air that is lost during unpressuirization in egress is minimized, consisting only of the small amount of air that is trapped in the interstitial space between the PLSS backpack and inner hatch cover.

The suitport allows environmental suits to be kept outside the cabin, both to protect the cabin from getting dirty or dusty due to bringing the suit inside, and to allow for quick egress. However, leaving the suit outside will allow it to collect more dust and be exposed to ultraviolet lighting and other degrading environmental factors.

In the DCIS two suitports penetrate the middle bulkhead between the two chambers. This allows the suits to have the advantage of being outside, yet enclosed in a nominally unpressurized volume, while at the same time providing a mechanism to seal the space, pressurize it, and use the volume as a "shirt-sleeves" workspace for suit maintenance without bringing all the dust inside the habitat.

D. EVA Technologies

A variety of suit servicing and EVA tools are provided in the Outer Compartment, including umbilical, battery charging, communications panel, and automated / manual operation of hatches, pumps, and controls. Translational aides, including frames, handholds, and foot restraints are provided in both chambers, and in the Inner Compartment are various aids for assisting a crew member to enter and exit the suit by themselves. External to the egress hatch, deployable frames (deep space configuration) or EVA porch (planetary surface configuration) provide handholds and locations to mount EVA tool lockers, cranes, robotics arms, and other EVA tools. Though not as critical for suitport EVAs, the dual chamber also allows crew the option of "camping out", or staying overnight in a reduced pressure inner chamber before the EVA begins.

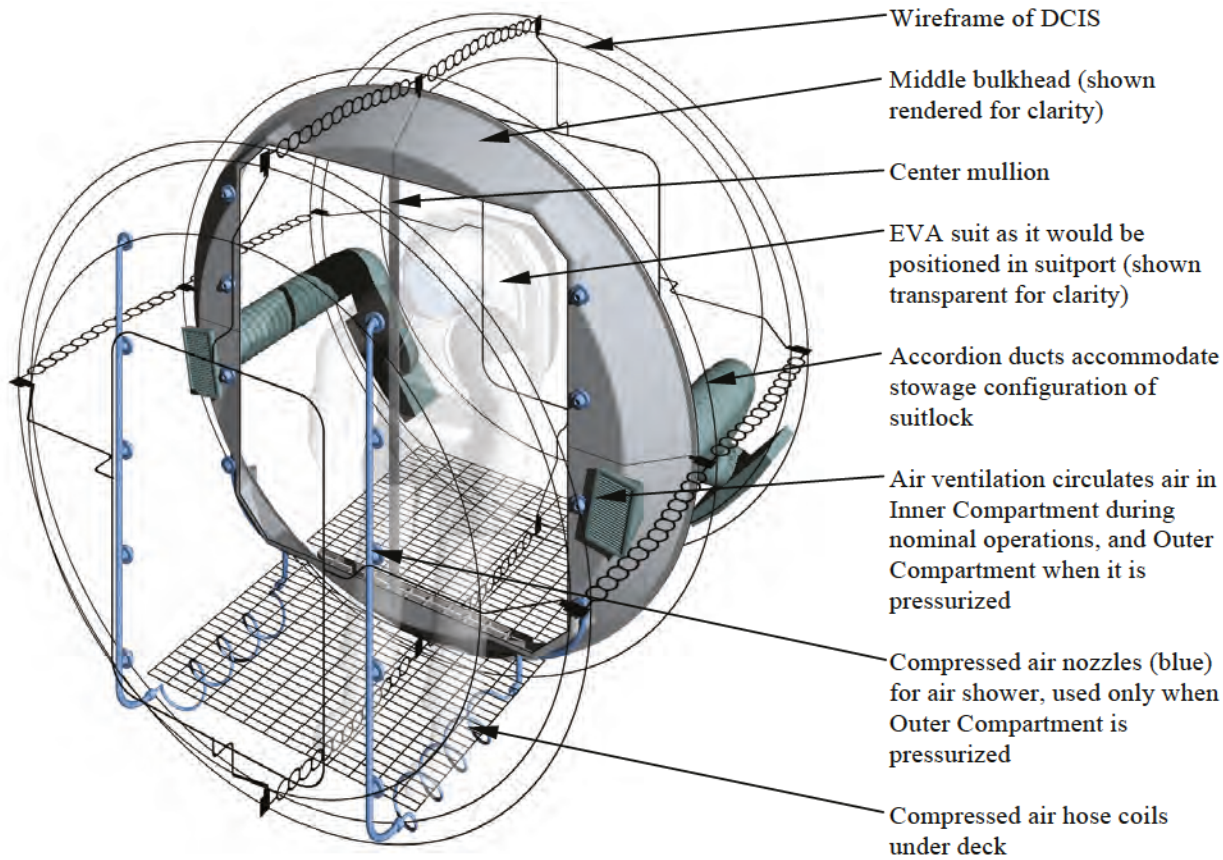

Figure 7: Ventilation and air shower concepts

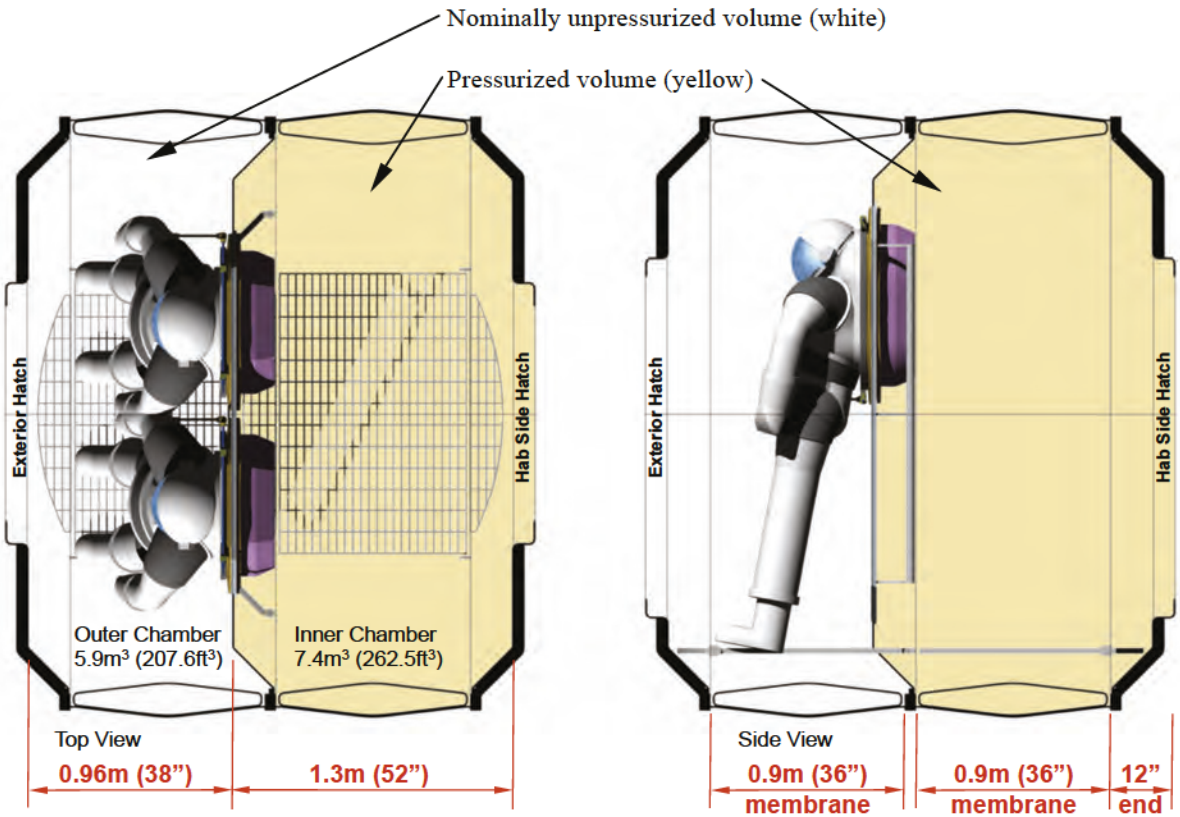

Figure 8: DCIS in "Suitport Mode" top section (left), side section (right)

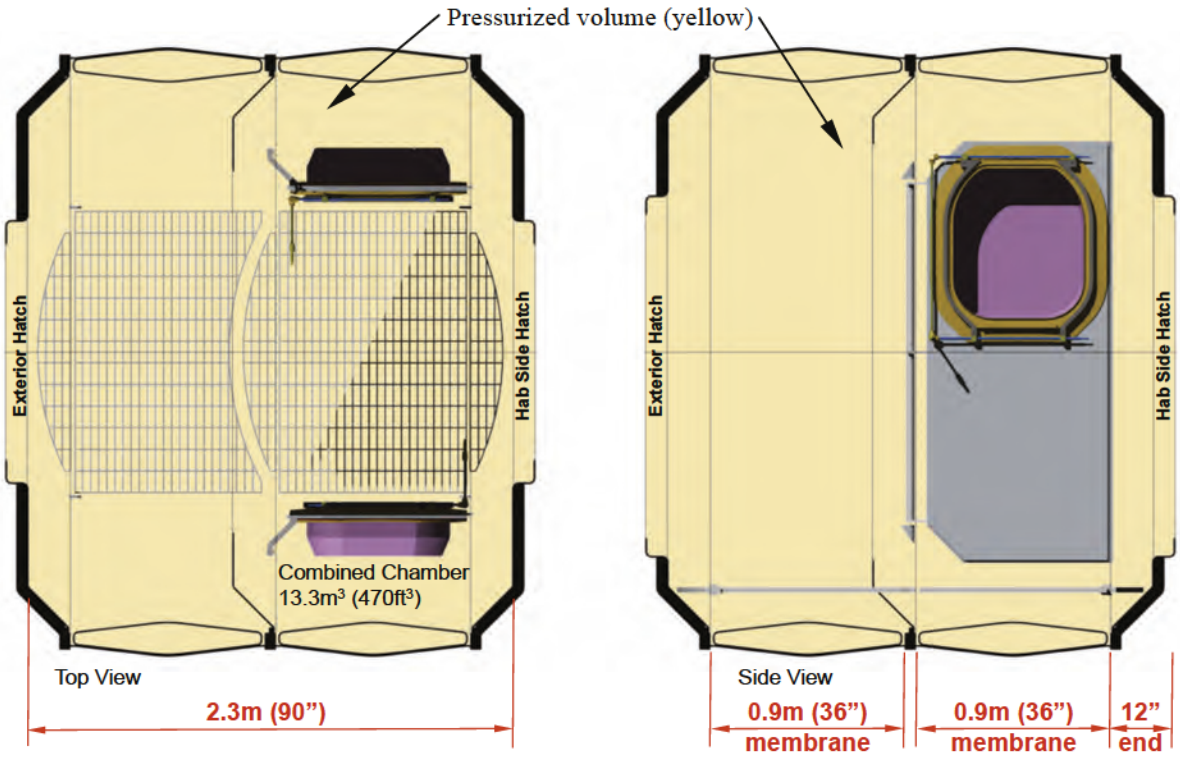

Figure 9: DCIS in "Large Volume Airlock Mode" top section (left), side section (right)

E. Environmental Protection

The DCIS will not have a separate Environmental Control and Life Support System (ECLSS), but will have ventilation fans that keep the air in the Inner Compartment circulating during nominal operations. A multi-zone scheme for dust control has been established that will be tested during various analog studies. First, the bulk of EVA activities will use suitports located elsewhere, where the pressure suits will be kept outside during normal operations. The suitlock will be used only occasionally, if the suits or other external element or subassembly needs maintenance in a shirt-sleeve environment. The second zone of dust control is the EVA porch, where crew will be able to stomp of some of the dust before entering the suitlock. The third zone of control will be the outer chamber during "Suitport Mode" and the combined chamber during "Large Volume Airlock Mode". In Suitport Mode, the pressure suits will remain outside the pressurized environment except when the outer chamber is pressurized for suit mainenance. When the outer chamber (or combined chamber during Large Volume Airlock Mode) is pressurized, air showers and vacuum cleaners will be used to clean off the suits or equipment. The fourth zone of control will then be bagging the suits or equipment, to be moved into a cordoned off section of the lab module that includes the General Maintenance Work Station. The cordoned off area will be ventilated and dusty equipment will not be taken outside the barrier. Finally, the fifth zone of protection is the laboratory itself, which will function as a work area separate from living areas.

At times when the Outer Compartment is pressurized, the ventilation system will circulate the air in that chamber as well (Figure 7). Return air ventilation (not shown in figure) will be under the perforated floor deck in planetary surface configuration, and will filter dust-laden air from the air shower that will be used to clean dust off of the EVA suits while suits are mounted for maintenance.

Part of the activities to be performed at D-RATS and other field analogs will be to explore whether the various levels and zones for dust protection will work with earth dust during the simulated missions.

F. Autonomous Operation

The DCIS will follow a similar approach as that of the HDU habitat prototype in regards to digital monitoring, actuation, and control. The control system follows a direct digital control scheme using the CAD system as a virtual environment interface (Howe 1998). In the HDU habitat prototype, the same engineering CAD model that was used to design and manufacture the module components was used to derive an accurate user interface called a Digital Double for monitoring and control of the various sensors and actuators in the habitat. The Digital Double user interface runs on smart phones and touch pad computers to allow a crew person to freely control any part of the habitat from a local intuitive control interface. The HDU project team is working on docking interfaces that will allow the DCIS and other modules to automatically populate a master model with its own CAD data whenever it is docked to the habitat. When the CAD model populates itself, the monitoring and control aspects of the newly docked physical module will autonomously insert themselves into the control features of the parent model, leaving an integrated control environment for the entire module stack.

IV. Mission Applicability

The development of the DCIS will initially utilize field analogs to technically and operationally test its functionality. The field prototype will gradually be improved, ultimately informing the design and technology that will go into flight units for both planetary surface and deep space.

A. Earth Analog Missions

The first DCIS prototype is proposed to be deployed at NASA D-RATS field tests as part of the HDU-DSH field analog (Figure 10). The suitlock will be deployed near the HDU General Maintenance Work Station so that dust containment and environmental suit maintenance functions will be close at hand (Figure 12). Subsequent mockups and prototypes may be developed for other field analogs, such as a Wet-DCIS for NASA NEEMO neutral buoyancy mission analogs in Florida. A simple pipe-frame volumetric Wet-DCIS is shown in Figure 13, but more elaborate, higher fidelity units may be manufactured to meet future test objectives for neutral buoyancy inflation, deployment, egress / ingress, suitport use, and EVA operations.

For the D-RATS earth analog shown in Figure 10, the DCIS prototype will be constructed of inexpensive materials that can stand up to earth gravity and handling, focusing on the proposed functionality of the unit rather than accurate mass and materials. This runs parallel to other element prototypes constructed for the HDU project, such as the EVA porch shown to the left in Figure 10, manufactured for the D-RATS 2011 field tests (Figure 11).

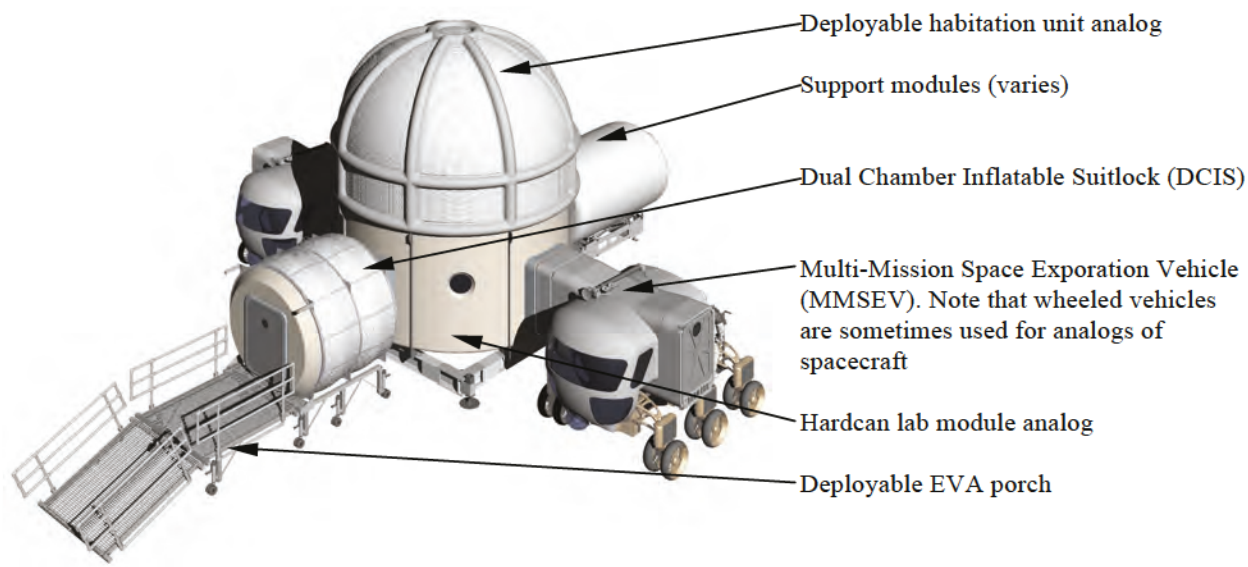

Figure 10: HDU-DSH NASA D-RATS analog with suitlock attached

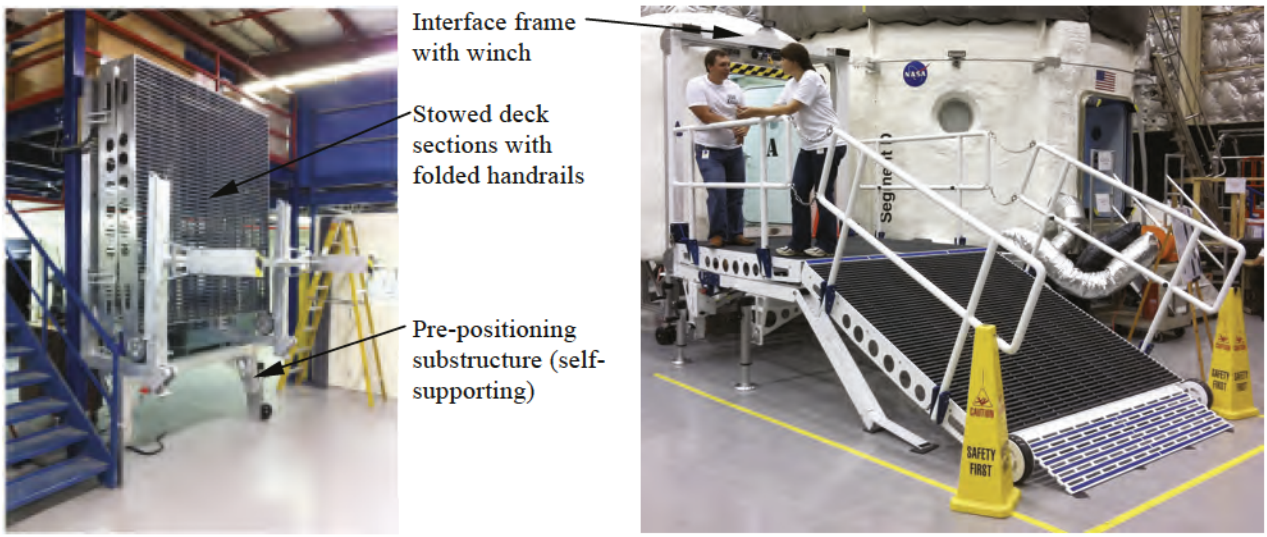

Figure 11: EVA porch in stowed configuration (left), and deployed configuration (right)

B. International Space Station

In the near term, the initial flight versions of DCIS would be deployed and tested on the International Space Station (ISS). The ISS analog units could then be improved, or used directly for a deep space mission (Figure 14). The flight version of the DCIS will be significantly less mass and less expensive than the ISS Quest airlock, and will allow for the testing of suitport technologies that are not possible with the Quest airlock. At 13.3m^3, the DCIS will be significantly smaller and less complex than the 34m^3 Quest airlock.

C. Deep Space Missions

The deep space version of the DCIS would be outfitted for microgravity, with hand and foot restraints as needed (Figure 14). The zero-g configuration of the DCIS would have deployable EVA frames and tool lockers, with handholds and foot restraints prepared for EVA crew.

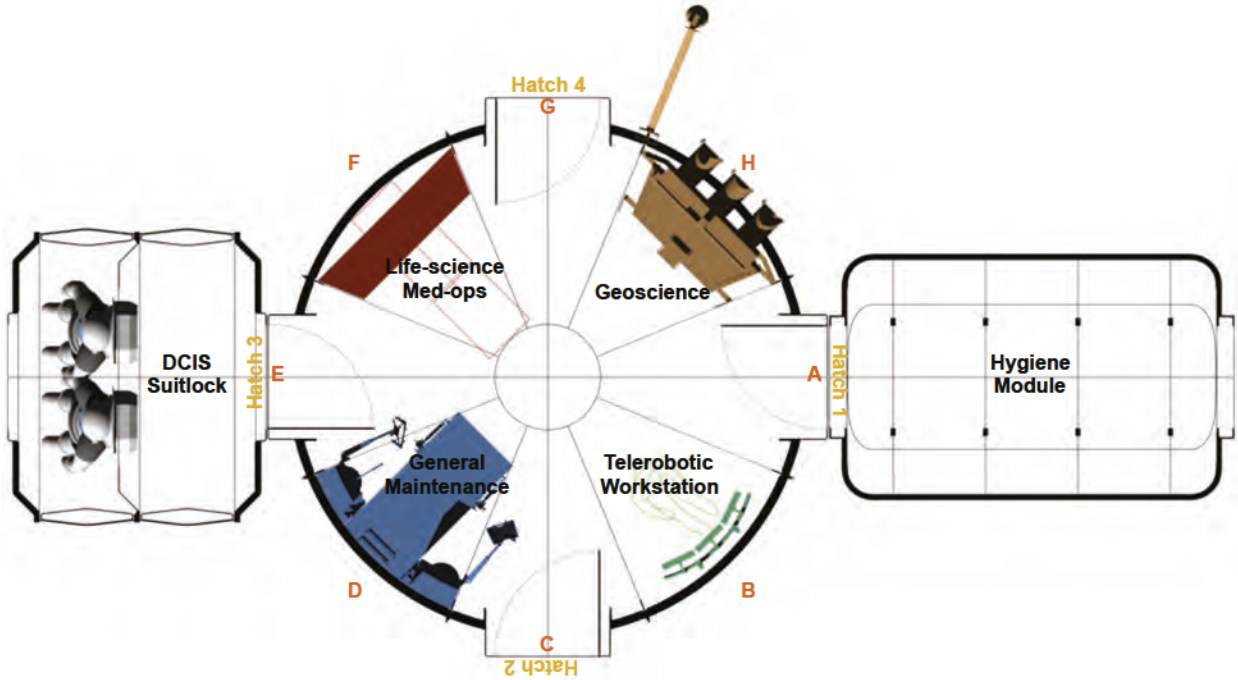

Figure 12: HDU-DSH D-RATS field analog floor plan with DCIS attached at left

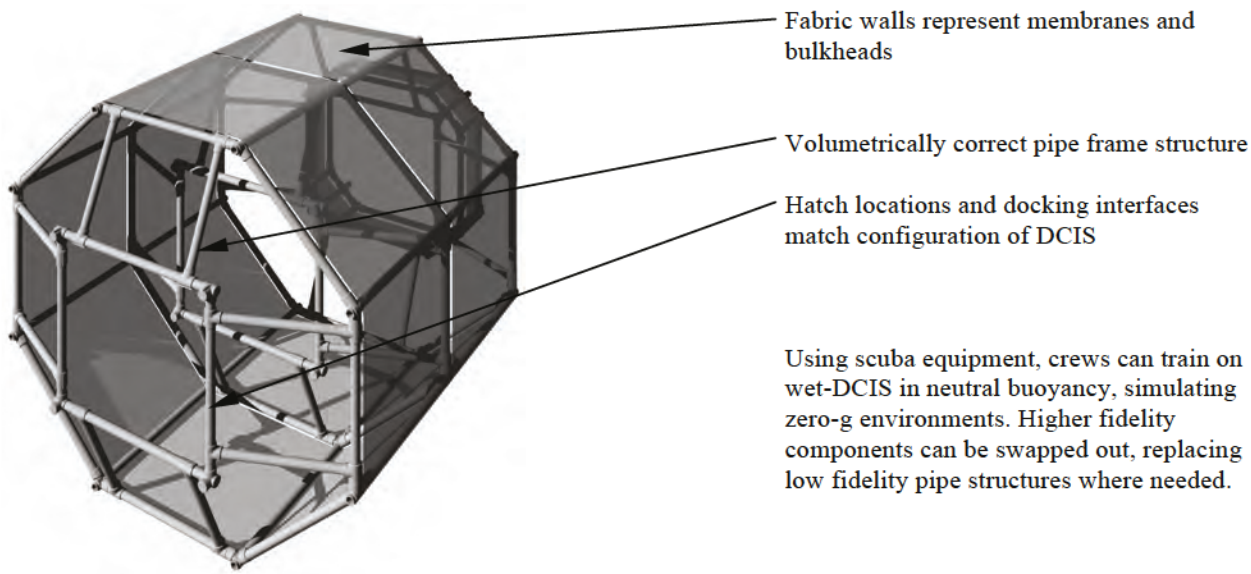

Figure 13: Notional design for a Wet-DCIS that can be used at NEEMO or neutral buoyancy facilities

D. Planetary Surface Missions

For planetary surface missions, such as moon or Mars, DCIS orientation would be fixed to allow suited crew to easily egress and ingress to and from the surface. A planetary surface version of the DCIS would be similar in configuration to the field test Earth analog design, with deployable interior deck and portable exterior EVA porch (Figure 3).

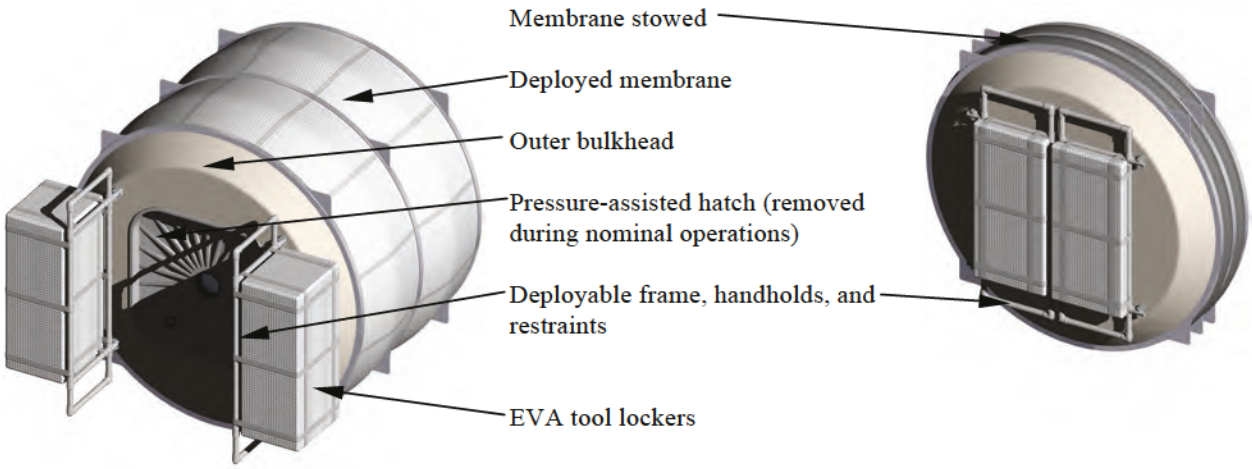

Figure 14: DCIS ISS and deep space configuration, deployed (left), and stowed (right)

V. Conclusion

The DCIS represents a more flexible EVA module than the ISS Quest Airlock, and incorporates the most advanced EVA technologies, including suitports, hybrid inflatable structures, and autonomous monitoring and control.

Acknowledgments

The research described in this paper was carried out at the National Aeronautics and Space Administration (NASA), and the Jet Propulsion Laboratory, California Institute of Technology, under a contract with NASA. Copyright 2011. All rights reserved.

References

Cohen, Marc M. (1989 June 27). Suitport Extra-vehicular Access Facility (US patent no. 4,842,224).

Cohen, Marc M. (1995 April). The Suitport's Progress (AIAA 95-1062). Life Sciences and Space Medicine Conference, Houston, Texas, USA, 3-5 April 1995. Reston, Virginia, USA: American Institute of Aeronautics and Astronautics.

Cohen, Marc M. (2001). Airlocks for Pressurized Rovers (NASA TSP-ARC-14557). Moffett Field, California, USA: Ames Research Center, National Aeronautics and Space Administration.

Griffin, Brand Norman (2009). Lunar Surface Airlocks. In A. S. Howe, B. Sherwood (Eds.), Out of This World: The New Field of Space Architecture (Chapter 17, p. 229-240). Reston, Virginia, USA: American Institute of Aeronautics and Astronautics.

Howe, A.S. (1998). A new paradigm for life-cycle management of kitof-parts building systems. (Doctoral Dissertation, University of Michigan, 1998). University Microfilms International, No. 9909905.