(Preprint) AAS 11-530

# FLIGHT PATH CONTROL DESIGN FOR THE CASSINI SOLSTICE MISSION

**Christopher G. Ballard**[*], **Rodica Ionasescu**[†]

The Cassini spacecraft has been in orbit around Saturn for just over 7 years, with a planned 7-year extension, called the Solstice Mission, which started on September 27, 2010. The Solstice Mission includes 205 maneuvers and 70 flybys which consist of the moons Titan, Enceladus, Dione, and Rhea. This mission is designed to use all available propellant with a statistical margin averaging 0.6 m/s per encounter, and the work done to prove and ensure the viability of this margin is highlighted in this paper.

## INTRODUCTION

Cassini has flown its four-year Prime Mission,[1–4] has completed its two-year Equinox Mission[5,6] and the first year of the Solstice Mission.[7] Cassini is in a unique position to observe the Saturnian system over a much longer temporal baseline. It is with this scientific opportunity in mind that the Solstice Mission was designed to go past the Saturn northern summer solstice to September 15, 2017. To ensure the spacecraft would have adequate propellant margin, the Solstice Mission was designed with less frequent flybys than the Prime and Equinox Missions.

To keep the Cassini spacecraft on the planned sequence of encounters, orbit trim maneuvers (OTMs) are executed. These maneuvers typically target B-plane components and time-of-periapsis to keep the spacecraft close to the reference trajectory. The maneuvers presented here encompass OTMs 256–469, targeted to the Titan-71 through Titan-126 flybys.

The characteristics of the Solstice Mission as they relate to maneuver design and analysis are explained. There is a portion of the Saturn tour between the original end of the Equinox Mission and the official beginning of the Solstice Mission, called the "Bridge Sequence". There is one double flyby, which is a flyby of Dione followed by Titan, with no OTMs in between the two encounters. There are also maneuvers that occur about a day after a flyby, such that there is not sufficient time to incorporate post-flyby tracking data into an updated maneuver design. Another feature is a non-traditional number of maneuvers in between flybys. For example, to reduce statistical $\Delta$V cost, extra approach maneuvers were added to some encounter legs. Also, there are a number of special cases with less than three maneuvers per encounter, each with its own reason for having only one or two maneuvers targeting the subsequent flyby.

[*]Corresponding Author; *Mailing Address*: Jet Propulsion Laboratory, Mail Stop 230-205, 4800 Oak Grove Drive, Pasadena, CA 91109-8099, *Tel*: (818) 354-5643; *Fax*: (818) 393-4495; *E-mail address*: Christopher.G.Ballard@jpl.nasa.gov

[†]Authors are members of the Cassini Navigation Team, Jet Propulsion Laboratory, California Institute of Technology, Pasadena, CA 91109.

A summary of the $\Delta$V statistics and the cumulative $\Delta$V are given. The total deterministic $\Delta$V is 119 m/s and the 90th percentile $\Delta$V is 163 m/s, which is a difference of 44 m/s. The mean statistical $\Delta$V cost per encounter is 0.60 m/s over 70 encounters, which is reduced from the 0.80 m/s cost predicted for the Equinox Mission.[8]

## MANEUVER

The goal of the orbit trim maneuvers is to keep the spacecraft as close as possible to the reference trajectory. The reference trajectory provides predetermined maneuver locations and flyby targets according to science sequence planning and objectives. The Solstice Mission contains 205 maneuvers, OTM-263 to OTM-469, spans across 70 encounters, Titan-73 to Titan-126, and covers seven years, from 27-Sep-2010 to 15-Sep-2017. The scheduled flybys include the moons Titan (54), Enceladus (11), Dione (3), and Rhea (2), and all will be specifically targeted with the exception of a double flyby of Dione and Titan. Because there is not sufficient time in between the double flyby for any maneuvers, only one of the two bodies will be targeted beforehand. The maneuver execution and strategy, along with characteristics of the Solstice Mission tour, and a statistical analysis of the maneuvers are presented in the next sections. It is important to note that while the full tour results are presented here, only the first two years of the tour have been finalized, the remainder serving as a preview, where the maneuver times and flyby targets may be refined.

### Maneuver Execution

The Cassini tour of the Saturnian system was designed to take advantage of the substantial gravity assist provided by each Titan flyby, with closer flybys imparting larger $\Delta$Vs to the spacecraft. For instance, a Titan flyby at an altitude of 950 km and a $V_\infty$ of 6 km/s supplies an equivalent $\Delta$V of about 800 m/s to Cassini. During the tour, propulsive maneuvers are necessary not only to correct the spacecraft's trajectory due to flyby dispersions, but also to shape the trajectory or modify the encounter geometry so as to take better advantage of gravity assist. Maneuvers are accomplished through the use of two independent propulsion systems. The bi-propellant Main Engine Assembly (MEA), with two main engines MEA-A and MEA-B, performs large maneuvers, while the Reaction Control System (RCS) thrusters handle small trajectory corrections. In general, all maneuvers $>$ 0.3 m/s (engine "cut-off" boundary) are performed on MEA and all maneuvers $\leq$ 0.3 m/s are performed on RCS. Main engine MEA-A has been used for every main engine burn since launch.

The coordinate system for the spacecraft is presented in Figure 1: $X_{\mathrm{S/C}}$, $Y_{\mathrm{S/C}}$, and $Z_{\mathrm{S/C}}$. The $Z_{\mathrm{S/C}}$ axis points from the high gain antenna to the MEA, the $X_{\mathrm{S/C}}$ axis points away from where Huygens probe was attached, and the $Y_{\mathrm{S/C}}$ axis completes the right-handed system. A limitation for using MEA during the roll/yaw turn sequence is that the engine is 6° offset from the $Z_{\mathrm{S/C}}$ axis. Therefore, there is an unreachable area or cone at which the nominal roll/yaw turn combination cannot access.[9] Because the RCS system's nominal thrust direction lines up with the $Z_{\mathrm{S/C}}$ axis, there is no

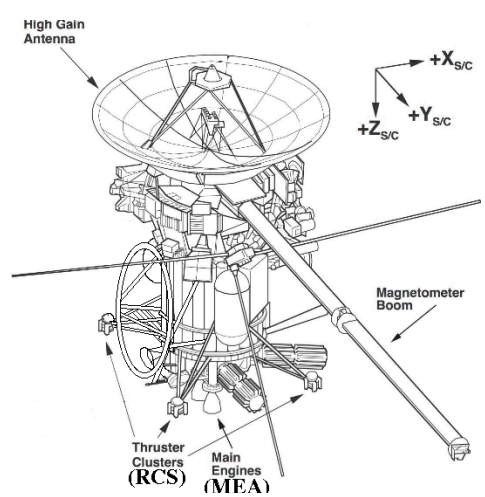


**Figure 1. Cassini Spacecraft**

unreachable cone associated with RCS.

Several activities associated with a maneuver contribute to the total $\Delta$V imparted to the spacecraft. These include, but are not limited to, dead-band tightening and limit cycling, roll and yaw turns, pointing-bias-fix turns, the burn itself, and Reaction Wheel Assembly (RWA) rotation rate changes (or biases). Generally, only the RWA bias $\Delta$Vs are not considered in the total $\Delta$V, with other $\Delta$V events added when analyzing execution errors (except for RCS burns, where dead-band tightening and limit cycling are also considered in the total $\Delta$V).

The 2008-01 execution-error model,[10] as shown in Table 1, was first used in April 2009 for MEA and RCS maneuvers starting with the OTM-192 maneuver design to the time of writing this document. This is the model used in the analysis of the Solstice Mission. For comparison, the slightly more conservative 2006-01 execution-error model produces a total mean $\Delta$V for the Solstice Mission which is about 15 m/s more than the mean with the 2008-01 model. This roughly shows the effect of what would happen if engine performance degraded and led to less accurate maneuvers.

**Table 1. 2008-01 Maneuver Execution-Error Model (1-$\sigma$)**

| | | MEA | RCS |
|---|---|---|---|
| Magnitude | Proportional (%) | 0.0 | 0.4 |
| | Fixed (mm/s) | 4.5 | 1.0 |
| Pointing | Proportional (mrad) | 1.1 | 9.0 |
| (per axis) | Fixed (mm/s) | 3.0 | 0.0 |

## Maneuver Strategy

The navigation strategy since launch has been to target the spacecraft to encounter conditions specified in the reference trajectory. In particular, the navigation strategy during the Saturn tour has been to target to three B-plane parameters of an upcoming encounter; the spatial components $\mathbf{B} \cdot \mathbf{R}$ and $\mathbf{B} \cdot \mathbf{T}$, and time-of-periapsis (see Appendix: B-Plane Description). Generally, three maneuvers are planned to control the spacecraft trajectory between each targeted Titan or icy satellite encounter: a flyby cleanup maneuver, an apocrone (Saturn-relative apoapsis) targeting maneuver, and an approach targeting maneuver. Past studies have shown that any additional maneuvers between encounters do not significantly lower the $\Delta$V requirements.[12] Figure 2 illustrates these maneuver locations for an outbound-to-inbound* Titan transfer.

The apocrone maneuver is normally performed within a few days of apocrone to shape the trajectory in order to achieve the flyby conditions. However, during the first two years of the Solstice Mission, a few of these trajectory shaping maneuvers are near periapsis due to multi-revs between targeted encounters (see *Maneuvers Near Periapses* section for more information.) The approach maneuver, the last targeting maneuver, is usually executed three days before an encounter to clean up errors from the apocrone maneuver and to achieve accurate flyby conditions. The approach maneuver location avoids interference with science measurements during the encounter period and allows enough time to perform a backup maneuver if necessary. Usually performed three days after an encounter, the cleanup maneuver is used to correct trajectory errors from the previous flyby. The

*An outbound flyby occurs after pericrone (Saturn-relative periapsis). Conversely, an inbound encounter occurs before pericrone.

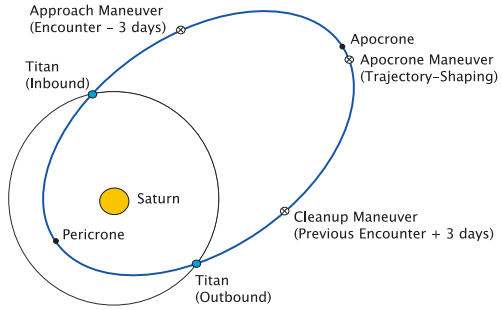


**Figure 2. Maneuver Strategy for Saturn Tour**

cleanup maneuver location is determined by the time required to reliably converge the orbit determination (OD) solution after an encounter, and the time required for maneuver designing, sequencing, and uplinking.

The targeting maneuvers in each encounter leg (generally, the apocrone and approach maneuvers) are computed by the K-inverse strategy which entails correcting three components of the B-plane miss: $\mathbf{B} \cdot \mathbf{R}$, $\mathbf{B} \cdot \mathbf{T}$, and TF. Specifically, the $\Delta$Vs are calculated by the following:

$$\mathbf{\Delta V} = -\mathbf{K^{-1}}\mathbf{\Delta B} \tag{1}$$

where $\mathbf{K}$ is a $3 \times 3$ matrix of partial derivatives of the B-plane miss parameters with respect to the spacecraft velocity

$$\mathbf{K} = \begin{bmatrix} \frac{\delta \mathbf{B}\cdot\mathbf{R}}{\delta V_x} & \frac{\delta \mathbf{B}\cdot\mathbf{R}}{\delta V_y} & \frac{\delta \mathbf{B}\cdot\mathbf{R}}{\delta V_z} \\ \frac{\delta \mathbf{B}\cdot\mathbf{T}}{\delta V_x} & \frac{\delta \mathbf{B}\cdot\mathbf{T}}{\delta V_y} & \frac{\delta \mathbf{B}\cdot\mathbf{T}}{\delta V_z} \\ \frac{\delta TF}{\delta V_x} & \frac{\delta TF}{\delta V_y} & \frac{\delta TF}{\delta V_z} \end{bmatrix} \tag{2}$$

and $\mathbf{\Delta B}$ is the B-plane error ($\Delta\mathbf{B} \cdot \mathbf{R}$, $\Delta\mathbf{B} \cdot \mathbf{T}$, and $\Delta$TF).

The flyby cleanup maneuvers are typically designed with a chained two-impulse optimization (CTWIMP) strategy, which minimizes the sum of the first two deterministic maneuvers in a leg (in this case, the cleanup and apocrone maneuvers) across several encounters. The first maneuver in each encounter leg (the cleanup maneuver) is computed by minimizing the following cost function:

$$J_i = \underbrace{||\Delta\mathbf{V}_{i,1}|| + ||\Delta\mathbf{V}_{i,2}||}_{leg\ i} + \underbrace{||\Delta\mathbf{V}_{i+1,1}|| + ||\Delta\mathbf{V}_{i+1,2}||}_{leg\ i+1} + ... \tag{3}$$

$$= \sum_{m=0}^{n} ||\Delta\mathbf{V}_{i+m,1}|| + ||\Delta\mathbf{V}_{i+m,2}|| \tag{4}$$

subject to the constraints

$$\Delta(\mathbf{B}\cdot\mathbf{R})_{i+1} = 0,\ \Delta(\mathbf{B}\cdot\mathbf{T})_{i+1} = 0,\ \Delta TF_{i+1} = 0,$$

$$\Delta(\mathbf{B}\cdot\mathbf{R})_{i+2} = 0,\ \Delta(\mathbf{B}\cdot\mathbf{T})_{i+2} = 0,\ \Delta TF_{i+2} = 0,\quad etc.\ up\ to\ (i+m) \tag{5}$$

where $m$ is the number of downstream encounters being optimized in the chain.

It follows that for $n$ downstream encounters (beyond the current encounter), $2(n+1)$ maneuvers are being optimized ($6(n+1)$ parameters) and $3(n+1)$ constraints are imposed ($\mathbf{B}\cdot\mathbf{R}$, $\mathbf{B}\cdot\mathbf{T}$, and TF). Besides providing an optimal distribution of the $\Delta$Vs over multiple legs, this optimization strategy helps control asymptote errors without actively altering downstream flyby aimpoints after each encounter. Figure 3 shows the nominal trajectory for the Saturn tour where $r_0 = (x_0, y_0, z_0)$ represents the nominal state location for the apocrone maneuver. Controlling the asymptote errors is accomplished by allowing the cleanup maneuver to optimize the Cartesian state of the apocrone maneuver by $\Delta r = (\Delta x, \Delta y, \Delta z)$. Another benefit of this strategy is that the designed cleanup maneuver $\Delta$V is less sensitive to maneuver time shifts.[?]

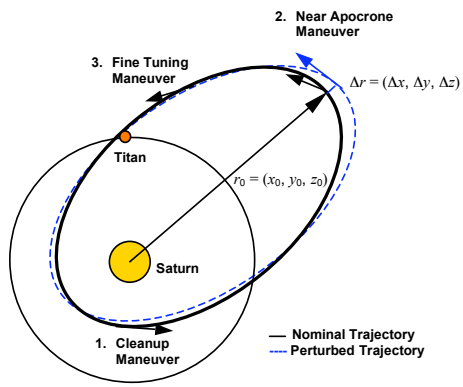


**Figure 3. Nominal and Perturbed Trajectory**

As an alternative, the cleanup maneuver can be targeted to the reference Cartesian state of the apocrone maneuver rather than be part of a chained two-maneuver optimization. This strategy is called "X, Y, Z targeting." In Figure 3, the perturbed state location for the apocrone maneuver $\Delta$r is constrained and chosen when there is little to no impact on science observations. Conversely, this strategy can be utilized to target a specific location for science (e.g. Enceladus occultation, OTM-131).[4] We usually choose the "X, Y, Z targeting" strategy to achieve better accuracy for a science observation.

**Table 2. Comparison of Total $\Delta$V with Varying Flybys in Optimization Chain**

| *Total Flybys in Optimization Chain* | *Downstream Flybys (n)* | *Total $\Delta$V (m/s)* Mean | 1-$\sigma$ | 90% |
|---|---|---|---|---|
| 1 | 0 | 213.15 | 17.34 | 236.01 |
| 2 | 1 | 185.13 | 6.45 | 193.49 |
| 3 | 2 | 178.83 | 4.91 | 185.42 |
| 4 | 3 | 177.95 | 4.51 | 183.95 |
| 5 | 4 | 177.43 | 4.36 | 183.1 |

Table 2 shows statistical predictions for varying the number of flybys in the optimization chain. Total $\Delta$V statistics include overlap with the Equinox Mission, T69 to T71, which can account for about 20 m/s in the $\Delta$V total. Note there is a decrease in $\Delta$V as the number of flybys increase. First, a single flyby ($n$ = 0) represents a case where each flyby is treated as an independent mission. The large $\Delta$V cost verifies the need for asymptote control via chaining downstream flybys. The Prime Mission taught the Cassini Navigation Team that 3 or 4 flyby chains ($n$ = 2 or 3) suffice in flight

operations to control the downstream cost. We have found that using 5 flybys in the linear analysis optimization chain produces results that are attainable in flight.

### Characteristics of the Solstice Mission Tour

*Bridge Sequence* The Bridge Sequence is the time period between the original end of the Equinox Mission, and the official start of the Solstice Mission. It spans from OTM-256 to OTM-262, which targets Titan-72. The last flyby of the Equinox Mission (Titan-70) was also lowered in altitude to 880 km, so the full length of trajectory analyzed starts at OTM-249 in order to capture the changes in the deterministic and statistical maneuvers at the end of the Equinox Mission.

*Double Flyby* As previously mentioned, one of the Solstice Mission encounters is a double flyby of Dione and Titan without any OTMs in between the two flybys as shown in Figure 4. Because this is a double flyby and only one of the two satellites can be targeted, the actual trajectory Cassini is on at the time of maneuver design for that encounter will determine which satellite we target. Also there will be some asymptote error in the trajectory, and whichever satellite is not targeted will have some difference in the flyby altitude compared to the reference trajectory value. The details of these flybys can be found in Table 4.

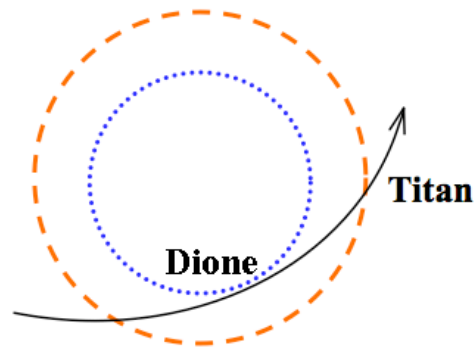


**Figure 4. D3/T79 Double Flyby**

*Non-Traditional Number of Maneuvers Between Encounters* Since Titan-c (15-Jan-2005), the standard maneuver strategy has been to have three maneuvers (two deterministic and one statistical) per encounter. The encounters below are all the exceptions to the standard strategy.

- Extra Approach Maneuvers – In order to keep the downstream statistical $\Delta$V costs low, and to reduce the mean size of the approach manevuer, an extra approach maneuver was added between the targeting maneuver and nominal approach maneuver for the following encounters: T72 – OTM-261a, T78 – OTM-288a, D3/T79 – OTM-300a, and E17 – OTM-312a.

- High Titan Flybys - The T80 and T81 legs are deterministically nearly ballistic, but adding maneuvers in between was necessary to keep the statistical $\Delta$V costs down for the maneuvers targeting the subsequent T82 and E17 flybys. OTM-304 was added as an approach maneuver to T80, and OTM-306 was added as the sole maneuver targeting to T81.

- Solar Conjunction – One of the mission requirements is to not send any commands to the spacecraft when the Sun-Earth-Probe (SEP) angle is within +/- 3 degrees. The Enceladus-14 (E14) to E15 leg of the tour only has two maneuvers, one deterministic and one statistical, because placing an approach maneuver near our standard of three days before an encounter would have put it right at the end of a period where the SEP angle was too low, so there would have been no way to command a maneuver. The tracking data for an approach here would have also been insufficient to design a maneuver.

- 14-day Transfer – Further along in the mission, at the E20 to E21 leg, there are only 14 days

in between the flybys, which was not enough time to place three maneuvers. Instead there are just two maneuvers in this leg to achieve the E21 target.

*OTM Naming Convention* For the Solstice Mission, a standardization of the OTM identification will be explicitly defined for the different situations that arise, both expected and unexpected. The maneuvers will be numbered to maintain a modulus 3 pattern, where the deterministic "targeting" maneuver is divisible by 3. This "targeting" maneuver is the first OTM in an encounter planned to be targeted directly to the desired flyby conditions. OTMs prior to this one may be targeted to intermediate aimpoints. In order to conform to this convention, encounters with less than 3 planned maneuvers will have skipped OTM numbers and encounters with more than 3 will have an alphanumeric character appended to it, based on the preceeding OTM number. As a result of these guidelines, the following OTM numbers do not exist in the mission: OTMs 293, 302, 305, 307, and 425. Lower case characters will be used to denote the different categories of added OTMs:

1. Supplemental OTMs (a, b) – Transfers that require four or more OTMs.
2. Contingency OTMs (c, d, e) – OTMs that are part of a contingency plan and are only executed if the contingency event has occurred. An example would be the Enceladus leaking thruster contingency OTMs.
3. Recovery OTMs (x, y, z) – Unplanned OTMs that are implemented to recover the trajectory from an unsatisfactory condition. An example of this would be OTM-183x.[5]

**Table 3. Scenarios and ΔV Costs for Select Backup Maneuvers**

| Scenario | Mvr. Time (ET) | Mvr. Size (m/s) | Total ΔV (m/s)* | Cost Over Ref. Traj. (m/s) |
|---|---|---|---|---|
| OTM-261 | 03-Sep-2010 03:34 | 2.30 | *7.53* | *0* |
| OTM-261 BU | 04-Sep-2010 03:34 | 12.05 | 19.36 | 11.83 |
| 261 BU and 261a | 04-Sep-2010 03:34<br>16-Sep-2010 02:48 | 6.97† | 12.50 | **4.97** |
| OTM-300 | 24-Nov-2011 05:19 | 2.95 | *34.46* | *0* |
| OTM-300 BU | 25-Nov-2011 09:34 | 31.84 | 92.60 | 58.14 |
| 300 BU and 300a | 25-Nov-2011 09:34<br>01-Dec-2011 23:05 | 12.57† | 42.04 | **7.58** |
| OTM-312 | 10-Mar-2012 03:02 | 3.5 | *36.94* | *0* |
| OTM-312 BU | 11-Mar-2012 03:02 | 9.98 | 44.02 | 7.08 |
| 312 BU and 312a | 11-Mar-2012 03:02<br>16-Mar-2012 02:47 | 9.98† | 44.11 | 7.17 |

* The sum of the deterministic ΔV from OTMs 261–297, 300–345, and 312–345, respectively.

† The sum of the two maneuvers.

*Maneuvers Near Periapsis* Due to the design of the trajectory, three maneuvers in the first two years after the Equinox Mission are within ∼+/-30° in true anomaly travel from periapsis, or 1 day from it, and have a significant (>1 m/s) deterministic component. These are OTMs 261, 300, and 312. If any of these maneuvers are not executed at their prime location, the backup maneuver

size could become unacceptably large, and the downstream maneuvers will also grow.[13] For the OTM-261 and OTM-300 backup maneuvers, we found that the strategy of chaining the backup maneuver with the following approach maneuver would reduce the $\Delta$V cost while requiring the least amount of trajectory changes. Because OTM-312 is right before three consecutive Enceladus flybys, the likelihood of being able to manipulate those flybys to save $\Delta$V was not very high because they don't offer a large gravity assist like Titan. Also, chaining OTM-312 backup with OTM-312a did not prove to be as effective, but this case has a penalty of about 7 m/s, which is not as costly as the other two nominal backup cases. Table 3 shows how effective the chaining strategy worked for OTM-261 and OTM-300. There is a possibility that reoptimizing the flyby targets of up to the four subsequent downstream flybys will further reduce the $\Delta$V cost, but only by perhaps 2–3 m/s.

**Maneuver Analysis**

The statistical predictions for maneuver size are presented here for the entire Solstice Mission. The results for the deterministic (cleanup and targeting) and statistical (approach) maneuvers are given in Tables 4 through 8. The table contains the maneuver name, orbit location, control law/target, maneuver time, deterministic $\Delta$V, and the $\Delta$V statistics of the mean, 1-$\sigma$, and 90% values. The predicted engine type for each maneuver is shown in the far right column, and is based on the 90% $\Delta$V level being above (MEA) or below (RCS) the 0.3 m/s threshhold. The table also shows the encounters where they occur, with corresponding altitudes, whether they are out/inbound, time to the next flyby, and resonance with Titan. The resonance is the ratio of the number of orbits of Titan to the number of orbits of the spacecraft. With Titan's orbital period of 16 days, the Titan resonance is always in multiples of 16 days, so for example a Titan-to-Titan transfer with a 32-day spacecraft orbit period has a resonance of 2:1. The following aspects contributed to the analysis and formation of the table of maneuver statistics:

1. Accounting for the end of Equinox Mission flyby changes and Bridge Sequence before the official start of the Solstice Mission.

2. Almost every OTM, and its backup, was made to be on a tracking pass that is at least 9 hours long. Starting in 1-Nov-2013 in Madrid and 1-Nov-2014 in Goldstone, the length of the tracking passes falls below 9 hours, so after those times at those locations, no maneuvers are placed on their respective passes. There are also two maneuvers, OTMs 300 and 467 which, due to sensitive orbit locations, had to be scheduled over two successive tracking passes.

3. All maneuvers were placed so that there was at least 5 days time since the last maneuver, with the exception of two maneuvers, OTMs 269 and 428, which are cleanup maneuvers about a day after their flybys and 4 days from the last approach maneuvers. They are sensitive maneuvers which had to have that placement and will be uplinked to the spacecraft before a post-flyby tracking pass. This means there is a potential for considerable error to be folded into the design of the subsequent maneuver.

4. Analysis utilizes OD covariances with no optical navigation in the schedule.[14]

5. The results listed in the tables have a 3 km floor for the OD, and the total mean $\Delta$V is 158 m/s with the 90% level at 163 m/s (see Figure 5). For comparison, with a 1 km floor for the OD, the total mean $\Delta$V for the mission would be about 152 m/s and the 90% level would be 157 m/s. We use 3 km to be conservative in our statistical analysis.

**Table 4. OTM Strategy, ΔV Statistics: OTM-249 through OTM-289**

| OTM No. | Description/ Orbit Location | Control Law/ Targets | Maneuver Time (ET/SCET) | Determ. ΔV (m/s) | Mean (m/s) | 1-$\sigma$ (m/s) | 90% (m/s) | Engine Type |
|---|---|---|---|---|---|---|---|---|
| 249 | ∼apoapsis | **B·R**, **B·T**, TF | 28-May-2010 09:45:05 | 11.049 | 10.408 | 0.474 | 10.968 | MEA |
| 250 | T69-3d | **B·R**, **B·T**, TF | 01-Jun-2010 19:45:05 | | 0.065 | 0.047 | 0.132 | RCS |
| Titan 69 (T69) | *Alt.= 2044.1 km, 05-Jun-2010, Outbound, 16 days (1:1 resonant transfer) to Titan 70* | | | | | | | |
| 251 | T69+3d | CTWIMP | 08-Jun-2010 02:44:05 | 0.004 | 0.548 | 0.471 | 1.200 | MEA |
| 252 | ∼apoapsis | **B·R**, **B·T**, TF | 13-Jun-2010 08:43:05 | 1.244 | 1.066 | 0.224 | 1.276 | MEA |
| 253 | T70-3d | **B·R**, **B·T**, TF | 18-Jun-2010 02:12:05 | | 0.040 | 0.026 | 0.077 | RCS |
| Titan 70 (T70) | *Alt.= 880.0 km, 21-Jun-2010, Outbound, 16 days (1:1 resonant transfer) to Titan 71* | | | | | | | |
| 254 | T70+3d | CTWIMP | 24-Jun-2010 07:57:05 | 0.005 | 0.874 | 0.715 | 1.849 | MEA |
| 255 | ∼apoapsis | **B·R**, **B·T**, TF | 30-Jun-2010 07:41:05 | 6.696 | 6.426 | 0.310 | 6.683 | MEA |
| **– Bridge Sequence –** | | | | | | | | |
| 256 | T71-3d | **B·R**, **B·T**, TF | 04-Jul-2010 01:10:05 | | 0.046 | 0.031 | 0.091 | RCS |
| Titan 71 (T71) | *Alt.= 1005.0 km, 7-Jul-2010, Outbound, 40 days (5:4 Titan resonance) to Enceladus 11* | | | | | | | |
| 257 | T71+3d | CTWIMP | 10-Jul-2010 06:54:05 | 0.012 | 0.958 | 0.712 | 2.009 | MEA |
| 258 | ∼apoapsis | **B·R**, **B·T**, TF | 18-Jul-2010 06:38:05 | 6.932 | 6.764 | 0.123 | 6.903 | MEA |
| 259 | E11-3d | **B·R**, **B·T**, TF | 10-Aug-2010 22:36:05 | | 0.136 | 0.101 | 0.276 | RCS |
| Enceladus 11 (E11) | *Alt.= 2551.6 km, 13-Aug-2010, Inbound, 40 days to Titan 72* | | | | | | | |
| 260 | E11+3d | CTWIMP | 17-Aug-2010 04:50:05 | 0.009 | 0.115 | 0.094 | 0.241 | RCS |
| 261 | ∼periapsis | **B·R**, **B·T**, TF | 03-Sep-2010 03:34:05 | 2.301 | 2.341 | 0.077 | 2.435 | MEA |
| 261a | ∼apoapsis | **B·R**, **B·T**, TF | 16-Sep-2010 02:48:05 | | 0.088 | 0.064 | 0.173 | RCS |
| 262 | T72-3d | **B·R**, **B·T**, TF | 21-Sep-2010 12:48:05 | | 0.025 | 0.014 | 0.045 | RCS |
| Titan 72 (T72) | *Alt.= 8174.9 km, 24-Sep-2010, Outbound, 48 days (3:2 resonant transfer) to Titan 73* | | | | | | | |
| **– Solstice Mission –** | | | | | | | | |
| 263 | T72+3d | CTWIMP | 28-Sep-2010 02:03:05 | 0.01 | 0.131 | 0.103 | 0.274 | RCS |
| 264 | ∼periapsis | **B·R**, **B·T**, TF | 15-Oct-2010 01:03:05 | 0.005 | 0.040 | 0.029 | 0.078 | RCS |
| 265 | T73-3d | **B·R**, **B·T**, TF | 08-Nov-2010 09:50:05 | | 0.077 | 0.055 | 0.152 | RCS |
| Titan 73 (T73) | *Alt.= 7920.7 km, 11-Nov-2010, Outbound, 21 days to Enceladus 12* | | | | | | | |
| 266 | T73+3d | CTWIMP | 14-Nov-2010 23:20:05 | 0.01 | 0.300 | 0.320 | 0.725 | MEA |
| 267 | ∼apoapsis | **B·R**, **B·T**, TF | 21-Nov-2010 23:06:05 | 2.317 | 1.996 | 0.324 | 2.295 | MEA |
| 268 | E12-3d | **B·R**, **B·T**, TF | 27-Nov-2010 16:21:05 | | 0.068 | 0.036 | 0.117 | RCS |
| Enceladus 12 (E12) | *Alt.= 50.0 km, 30-Nov-2010, Outbound, 21 days to Enceladus 13* | | | | | | | |
| 269 | E12+1d | CTWIMP | 01-Dec-2010 08:37:05 | 0.001 | 0.071 | 0.052 | 0.145 | RCS |
| 270 | ∼apoapsis | **B·R**, **B·T**, TF | 08-Dec-2010 22:08:05 | 0.036 | 0.155 | 0.097 | 0.293 | RCS |
| 271 | E13-3d | **B·R**, **B·T**, TF | 17-Dec-2010 21:24:05 | | 0.032 | 0.020 | 0.056 | RCS |
| Enceladus 13 (E13) | *Alt.= 50.0 km, 21-Dec-2010, Outbound, 21 days to Rhea 3* | | | | | | | |
| 272 | E13+3d | CTWIMP | 24-Dec-2010 07:10:05 | 0.001 | 0.204 | 0.158 | 0.435 | MEA |
| 273 | ∼apoapsis | **B·R**, **B·T**, TF | 01-Jan-2011 06:41:05 | 0.005 | 0.227 | 0.246 | 0.575 | MEA |
| 274 | R3-3d | **B·R**, **B·T**, TF | 08-Jan-2011 06:27:05 | | 0.044 | 0.031 | 0.087 | RCS |
| Rhea 3 (R3) | *Alt.= 75.0 km, 11-Jan-2011, Outbound, 38 days to Titan 74* | | | | | | | |
| 275 | R3+3d | CTWIMP | 14-Jan-2011 13:28:05 | 2.639 | 2.603 | 0.164 | 2.765 | MEA |
| 276 | ∼periapsis | **B·R**, **B·T**, TF | 01-Feb-2011 04:45:05 | 0.008 | 0.473 | 0.624 | 1.327 | MEA |
| 277 | T74-3d | **B·R**, **B·T**, TF | 15-Feb-2011 17:47:05 | | 0.076 | 0.053 | 0.152 | RCS |
| Titan 74 (T74) | *Alt.= 3650.7 km, 18-Feb-2011, Inbound, 60 days to Titan 75* | | | | | | | |
| 278 | T74+3d | CTWIMP | 22-Feb-2011 03:32:05 | 0.007 | 0.738 | 0.440 | 1.332 | MEA |
| 279 | ∼apoapsis | **B·R**, **B·T**, TF | 02-Mar-2011 10:18:05 | 0.014 | 0.357 | 0.193 | 0.612 | MEA |
| 280 | T75-3d | **B·R**, **B·T**, TF | 15-Apr-2011 23:49:05 | | 0.119 | 0.089 | 0.246 | RCS |
| Titan 75 (T75) | *Alt.= 10052.8 km, 19-Apr-2011, Outbound, 19 days to Titan 76* | | | | | | | |
| 281 | T75+3d | CTWIMP | 22-Apr-2011 06:49:05 | 0.002 | 0.265 | 0.191 | 0.525 | MEA |
| 282 | ∼apoapsis | **B·R**, **B·T**, TF | 29-Apr-2011 06:19:05 | 0.004 | 0.049 | 0.044 | 0.111 | RCS |
| 283 | T76-3d | **B·R**, **B·T**, TF | 05-May-2011 22:18:05 | | 0.023 | 0.015 | 0.044 | RCS |
| Titan 76 (T76) | *Alt.= 1873.2 km, 08-May-2011, Inbound, 43 days to Titan 77* | | | | | | | |
| 284 | T76+3d | CTWIMP | 12-May-2011 05:33:05 | 0.01 | 0.718 | 0.556 | 1.509 | MEA |
| 285 | ∼apoapsis | **B·R**, **B·T**, TF | 24-May-2011 04:46:05 | 0.011 | 0.356 | 0.250 | 0.703 | MEA |
| 286 | T77-3d | **B·R**, **B·T**, TF | 17-Jun-2011 02:58:05 | | 0.061 | 0.049 | 0.130 | RCS |
| Titan 77 (T77) | *Alt.= 1358.7 km, 20-Jun-2011, Outbound, 84 days to Titan 78* | | | | | | | |
| 287 | T77+3d | CTWIMP | 24-Jun-2011 08:43:05 | 0.005 | 1.289 | 0.887 | 2.577 | MEA |
| 288 | ∼periapsis | **B·R**, **B·T**, TF | 22-Aug-2011 15:05:05 | 0.022 | 0.201 | 0.111 | 0.352 | MEA |
| 288a | ∼apoapsis | **B·R**, **B·T**, TF | 01-Sep-2011 22:04:05 | | 0.024 | 0.013 | 0.041 | RCS |
| 289 | T78-3d | **B·R**, **B·T**, TF | 09-Sep-2011 03:49:05 | | 0.036 | 0.024 | 0.073 | RCS |
| Titan 78 (T78) | *Alt.= 5821.4 km, 12-Sep-2011, Inbound, 19 days to Enceladus 14* | | | | | | | |

**Table 5. OTM Strategy, ΔV Statistics: OTM-290 through OTM-334**

| OTM No. | Description/ Orbit Location | Control Law/ Targets | Maneuver Time (ET/SCET) | Determ. ΔV (m/s) | Mean (m/s) | 1-$\sigma$ (m/s) | 90% (m/s) | Engine Type |
|---|---|---|---|---|---|---|---|---|
| 290 | T78+3d | CTWIMP | 15-Sep-2011 13:48:05 | 0.004 | 0.001 | 0.005 | 0.002 | RCS |
| 291 | ∼apoapsis | **B·R**, **B·T**, TF | 20-Sep-2011 03:18:05 | 4.969 | 4.922 | 0.220 | 5.206 | MEA |
| 292 | E14-3d | **B·R**, **B·T**, TF | 28-Sep-2011 13:03:05 | | 0.053 | 0.037 | 0.108 | RCS |
| Enceladus 14 (E14) | *Alt.= 100.0 km, 01-Oct-2011, Inbound, 18 days to Enceladus 15* | | | | | | | |
| 294 | E14+3d | **B·R**, **B·T**, TF | 05-Oct-2011 02:17:05 | 0.016 | 0.149 | 0.109 | 0.303 | MEA |
| 295 | ∼apoapsis | **B·R**, **B·T**, TF | 10-Oct-2011 02:02:05 | | 0.007 | 0.004 | 0.012 | RCS |
| Enceladus 15 (E15) | *Alt.= 1236.1 km, 19-Oct-2011, Inbound, 18 days to Enceladus 16* | | | | | | | |
| 296 | E15+3d | CTWIMP | 21-Oct-2011 01:32:05 | 0.017 | 0.011 | 0.008 | 0.023 | RCS |
| 297 | ∼apoapsis | **B·R**, **B·T**, TF | 28-Oct-2011 11:18:05 | 0.003 | 0.012 | 0.005 | 0.019 | RCS |
| 298 | E16-3d | **B·R**, **B·T**, TF | 03-Nov-2011 00:48:05 | | 0.012 | 0.006 | 0.020 | RCS |
| Enceladus 16 (E16) | *Alt.= 500.0 km, 06-Nov-2011, Inbound, 36 days to Titan 79* | | | | | | | |
| 299 | E16+3d | CTWIMP | 09-Nov-2011 00:18:05 | 2.192 | 2.261 | 0.261 | 2.614 | MEA |
| 300 | ∼periapsis | **B·R**, **B·T**, TF | 24-Nov-2011 05:19:05 | 2.949 | 3.205 | 0.253 | 3.551 | MEA |
| 300a | ∼apoapsis | **B·R**, **B·T**, TF | 01-Dec-2011 23:05:05 | | 0.047 | 0.032 | 0.095 | RCS |
| 301 | T79-4d | **B·R**, **B·T**, TF | 09-Dec-2011 08:50:05 | | 0.021 | 0.012 | 0.037 | RCS |
| Dione 3 (D3) | *Alt.= 99.7 km, 12-Dec-2011, Outbound, 1 day to Titan 79* | | | | | | | |
| Titan 79 (T79) | *Alt.= 3585.8 km, 13-Dec-2011, Outbound, 20 days to Titan 80* | | | | | | | |
| 303 | T79+4d | **B·R**, **B·T**, TF | 17-Dec-2011 08:21:05 | 0.031 | 1.871 | 1.349 | 3.756 | MEA |
| 304 | ∼apoapsis | **B·R**, **B·T**, TF | 22-Dec-2011 21:52:05 | | 0.015 | 0.008 | 0.026 | RCS |
| Titan 80 (T80) | *Alt.= 29415.3 km, 02-Jan-2012, Inbound, 28 days to Titan 81* | | | | | | | |
| 306 | ∼apoapsis | **B·R**, **B·T**, TF | 16-Jan-2012 06:40:05 | 0.007 | 0.369 | 0.250 | 0.681 | MEA |
| Titan 81 (T81) | *Alt.= 31130.6 km, 30-Jan-2012, Outbound, 20 days to Titan 82* | | | | | | | |
| 308 | T81+4d | CTWIMP | 03-Feb-2012 05:28:05 | 0.02 | 0.366 | 0.316 | 0.686 | MEA |
| 309 | ∼apoapsis | **B·R**, **B·T**, TF | 10-Feb-2012 12:29:05 | 0.01 | 0.041 | 0.121 | 0.070 | RCS |
| 310 | T82-3d | **B·R**, **B·T**, TF | 16-Feb-2012 04:44:05 | | 0.021 | 0.011 | 0.035 | RCS |
| Titan 82 (T82) | *Alt.= 3803.3 km, 19-Feb-2012, Inbound, 38 days to Enceladus 17* | | | | | | | |
| 311 | T82+4d | CTWIMP | 23-Feb-2012 04:15:05 | 0.015 | 0.214 | 0.186 | 0.432 | MEA |
| 312 | ∼periapsis | **B·R**, **B·T**, TF | 10-Mar-2012 03:02:05 | 3.5 | 3.634 | 0.154 | 3.847 | MEA |
| 312a | ∼apoapsis | **B·R**, **B·T**, TF | 16-Mar-2012 02:47:05 | | 0.035 | 0.026 | 0.073 | RCS |
| 313 | E17-3d | **B·R**, **B·T**, TF | 24-Mar-2012 16:03:05 | | 0.013 | 0.008 | 0.024 | RCS |
| Enceladus 17 (E17) | *Alt.= 75.0 km, 27-Mar-2012, Inbound, 18 days to Enceladus 18* | | | | | | | |
| 314 | E17+4d | CTWIMP | 31-Mar-2012 01:33:05 | 0.091 | 0.159 | 0.120 | 0.323 | MEA |
| 315 | ∼apoapsis | **B·R**, **B·T**, TF | 05-Apr-2012 08:48:05 | 0.073 | 0.040 | 0.032 | 0.093 | RCS |
| 316 | E18-3d | **B·R**, **B·T**, TF | 11-Apr-2012 14:49:05 | | 0.017 | 0.012 | 0.034 | RCS |
| Enceladus 18 (E18) | *Alt.= 75.0 km, 14-Apr-2012, Inbound, 18 days to Enceladus 19* | | | | | | | |
| 317 | E18+3d | CTWIMP | 18-Apr-2012 00:19:05 | 0.28 | 0.289 | 0.167 | 0.513 | MEA |
| 318 | ∼apoapsis | **B·R**, **B·T**, TF | 24-Apr-2012 07:33:05 | 0.103 | 0.118 | 0.062 | 0.209 | RCS |
| 319 | E19-3d | **B·R**, **B·T**, TF | 29-Apr-2012 07:18:05 | | 0.016 | 0.011 | 0.031 | RCS |
| Enceladus 19 (E19) | *Alt.= 75.0 km, 02-May-2012, Inbound, 20 days to Titan 83* | | | | | | | |
| 320 | E19+4d | CTWIMP | 06-May-2012 06:48:05 | 0.003 | 0.118 | 0.102 | 0.259 | RCS |
| 321 | ∼apoapsis | **B·R**, **B·T**, TF | 14-May-2012 06:02:05 | 8.261 | 8.223 | 0.072 | 8.305 | MEA |
| 322 | T83-3d | **B·R**, **B·T**, TF | 19-May-2012 05:47:05 | | 0.049 | 0.030 | 0.093 | RCS |
| Titan 83 (T83) | *Alt.= 955.0 km, 22-May-2012, Outbound, 16 days (1:1 resonant transfer) to Titan 84* | | | | | | | |
| 323 | T83+3d | CTWIMP | 25-May-2012 05:17:05 | 0.009 | 0.948 | 0.737 | 1.977 | MEA |
| 324 | ∼apoapsis | **B·R**, **B·T**, TF | 30-May-2012 05:01:05 | 3.709 | 3.464 | 0.191 | 3.686 | MEA |
| 325 | T84-3d | **B·R**, **B·T**, TF | 03-Jun-2012 21:16:05 | | 0.034 | 0.021 | 0.063 | RCS |
| Titan 84 (T84) | *Alt.= 959.0 km, 07-Jun-2012, Outbound, 48 days (3:2 resonant transfer) to Titan 85* | | | | | | | |
| 326 | T84+3d | CTWIMP | 10-Jun-2012 10:30:05 | 0.006 | 0.800 | 0.582 | 1.584 | MEA |
| 327 | ∼apoapsis | **B·R**, **B·T**, TF | 21-Jun-2012 03:29:05 | 10.118 | 10.002 | 0.093 | 10.099 | MEA |
| 328 | T85-3d | **B·R**, **B·T**, TF | 21-Jul-2012 07:39:05 | | 0.198 | 0.147 | 0.394 | MEA |
| Titan 85 (T85) | *Alt.= 1012.0 km, 24-Jul-2012, Outbound, 62 days (4:3 resonant transfer) to Titan 86* | | | | | | | |
| 329 | T85+3d | CTWIMP | 28-Jul-2012 07:09:05 | 0.001 | 0.524 | 0.528 | 1.259 | MEA |
| 330 | ∼apoapsis | **B·R**, **B·T**, TF | 07-Aug-2012 06:37:05 | 4.275 | 4.200 | 0.149 | 4.310 | MEA |
| 331 | T86-3d | **B·R**, **B·T**, TF | 23-Sep-2012 13:48:05 | | 0.222 | 0.166 | 0.461 | MEA |
| Titan 86 (T86) | *Alt.= 956.0 km, 26-Sep-2012, Outbound, 48 days (3:2 resonant transfer) to Titan 87* | | | | | | | |
| 332 | T86+4d | CTWIMP | 30-Sep-2012 03:17:05 | 0.009 | 0.987 | 0.759 | 2.070 | MEA |
| 333 | ∼apoapsis | **B·R**, **B·T**, TF | 09-Oct-2012 13:02:05 | 0.795 | 0.721 | 0.114 | 0.844 | MEA |
| 334 | T87-4d | **B·R**, **B·T**, TF | 09-Nov-2012 18:47:05 | | 0.114 | 0.077 | 0.226 | RCS |
| Titan 87 (T87) | *Alt.= 973.0 km, 13-Nov-2012, Outbound, 16 days (1:1 resonant transfer) to Titan 88* | | | | | | | |

**Table 6. OTM Strategy, ΔV Statistics: OTM-335 through OTM-379**

| OTM No. | Description/ Orbit Location | Control Law/ Targets | Maneuver Time (ET/SCET) | Determ. ΔV (m/s) | Mean (m/s) | 1-$\sigma$ (m/s) | 90% (m/s) | Engine Type |
|---|---|---|---|---|---|---|---|---|
| 335 | T87+4d | CTWIMP | 17-Nov-2012 00:32:05 | 0.061 | 1.080 | 0.919 | 2.355 | MEA |
| 336 | ∼apoapsis | **B·R**, **B·T**, TF | 22-Nov-2012 00:17:05 | 5.03 | 4.935 | 0.198 | 5.118 | MEA |
| 337 | T88-3d | **B·R**, **B·T**, TF | 26-Nov-2012 00:02:05 | | 0.044 | 0.022 | 0.074 | RCS |
| Titan 88 (T88) | *Alt.= 1014.0 km, 29-Nov-2012, Outbound, 80 days (5:6 resonant transfer) to Titan 89* | | | | | | | |
| 338 | T88+4d | CTWIMP | 02-Dec-2012 23:33:05 | 0.239 | 0.905 | 0.723 | 1.831 | MEA |
| 339 | ∼periapsis | **B·R**, **B·T**, TF | 30-Jan-2013 20:10:05 | 1.732 | 1.808 | 0.153 | 2.021 | MEA |
| 340 | T89-4d | **B·R**, **B·T**, TF | 13-Feb-2013 05:27:05 | | 0.066 | 0.037 | 0.117 | RCS |
| Titan 89 (T89) | *Alt.= 1978.2 km, 17-Feb-2013, Outbound, 21 days (3:4 Titan resonance) to Rhea 4* | | | | | | | |
| 341 | T89+7d | CTWIMP | 24-Feb-2013 12:13:05 | 1.459 | 1.560 | 0.177 | 1.825 | MEA |
| 342 | ∼apoapsis | **B·R**, **B·T**, TF | 02-Mar-2013 04:29:05 | 0.077 | 0.722 | 0.484 | 1.370 | MEA |
| 343 | R4-3d | **B·R**, **B·T**, TF | 06-Mar-2013 17:59:05 | | 0.033 | 0.017 | 0.057 | RCS |
| Rhea 4 (R4) | *Alt.= 1000.0 km, 09-Mar-2013, Inbound, 27 days to Titan 90* | | | | | | | |
| 344 | R4+3d | CTWIMP | 12-Mar-2013 03:45:05 | 0.065 | 0.125 | 0.105 | 0.266 | RCS |
| 345 | ∼apoapsis | **B·R**, **B·T**, TF | 17-Mar-2013 03:30:05 | 0.041 | 0.070 | 0.079 | 0.125 | RCS |
| 346 | T90-4d | **B·R**, **B·T**, TF | 01-Apr-2013 16:17:05 | | 0.037 | 0.019 | 0.062 | RCS |
| Titan 90 (T90) | *Alt.= 1400.0 km, 05-Apr-2013, Outbound, 48 days (3:5 resonant transfer) to Titan 91* | | | | | | | |
| 347 | T90+3d | CTWIMP | 09-Apr-2013 01:47:05 | 0.006 | 0.756 | 0.606 | 1.573 | MEA |
| 348 | ∼periapsis | **B·R**, **B·T**, TF | 30-Apr-2013 08:03:05 | 0.413 | 0.512 | 0.243 | 0.825 | MEA |
| 349 | T91-4d | **B·R**, **B·T**, TF | 19-May-2013 12:47:05 | | 0.061 | 0.033 | 0.103 | RCS |
| Titan 91 (T91) | *Alt.= 969.8 km, 23-May-2013, Outbound, 48 days (3:4 resonant transfer) to Titan 92* | | | | | | | |
| 350 | T91+4d | CTWIMP | 27-May-2013 06:02:05 | 0.029 | 0.803 | 0.640 | 1.681 | MEA |
| 351 | ∼periapsis | **B·R**, **B·T**, TF | 11-Jun-2013 21:15:05 | 0.827 | 0.804 | 0.257 | 1.100 | MEA |
| 352 | T92-3d | **B·R**, **B·T**, TF | 07-Jul-2013 09:27:05 | | 0.156 | 0.087 | 0.273 | RCS |
| Titan 92 (T92) | *Alt.= 964.0 km, 10-Jul-2013, Outbound, 16 days (1:1 resonant transfer) to Titan 93* | | | | | | | |
| 353 | T92+4d | CTWIMP | 14-Jul-2013 02:41:05 | 0.008 | 0.526 | 0.456 | 1.167 | MEA |
| 354 | ∼apoapsis | **B·R**, **B·T**, TF | 19-Jul-2013 02:26:05 | 2.375 | 2.307 | 0.153 | 2.443 | MEA |
| 355 | T93-3d | **B·R**, **B·T**, TF | 23-Jul-2013 08:25:05 | | 0.032 | 0.020 | 0.058 | RCS |
| Titan 93 (T93) | *Alt.= 1400.0 km, 26-Jul-2013, Outbound, 48 days (3:2 resonant transfer) to Titan 94* | | | | | | | |
| 356 | T93+4d | CTWIMP | 30-Jul-2013 07:54:05 | 0.005 | 0.552 | 0.460 | 1.214 | MEA |
| 357 | ∼apoapsis | **B·R**, **B·T**, TF | 07-Aug-2013 07:23:05 | 3.607 | 3.561 | 0.155 | 3.725 | MEA |
| 358 | T94-3d | **B·R**, **B·T**, TF | 09-Sep-2013 05:19:05 | | 0.146 | 0.102 | 0.291 | RCS |
| Titan 94 (T94) | *Alt.= 1400.0 km, 12-Sep-2013, Outbound, 32 days (2:1 resonant transfer) to Titan 95* | | | | | | | |
| 359 | T94+4d | CTWIMP | 16-Sep-2013 04:48:05 | 0.008 | 0.363 | 0.264 | 0.720 | MEA |
| 360 | ∼apoapsis | **B·R**, **B·T**, TF | 30-Sep-2013 04:02:05 | 0.077 | 0.085 | 0.046 | 0.151 | RCS |
| 361 | T95-3d | **B·R**, **B·T**, TF | 11-Oct-2013 03:16:05 | | 0.021 | 0.012 | 0.037 | RCS |
| Titan 95 (T95) | *Alt.= 961.0 km, 14-Oct-2013, Outbound, 48 days (3:1 resonant transfer) to Titan 96* | | | | | | | |
| 362 | T95+3d | CTWIMP | 17-Oct-2013 13:16:05 | 0.008 | 0.150 | 0.124 | 0.329 | MEA |
| 363 | ∼apoapsis | **B·R**, **B·T**, TF | 02-Nov-2013 12:16:05 | 0.367 | 0.369 | 0.033 | 0.406 | MEA |
| 364 | T96-3d | **B·R**, **B·T**, TF | 28-Nov-2013 00:46:05 | | 0.122 | 0.093 | 0.251 | RCS |
| Titan 96 (T96) | *Alt.= 1400.0 km, 01-Dec-2013, Inbound, 32 days (2:1 resonant transfer) to Titan 97* | | | | | | | |
| 365 | T96+4d | CTWIMP | 04-Dec-2013 17:47:05 | 0.036 | 0.349 | 0.260 | 0.712 | MEA |
| 366 | ∼apoapsis | **B·R**, **B·T**, TF | 17-Dec-2013 23:33:05 | 0.357 | 0.333 | 0.117 | 0.477 | MEA |
| 367 | T97-3d | **B·R**, **B·T**, TF | 29-Dec-2013 22:49:05 | | 0.045 | 0.034 | 0.093 | RCS |
| Titan 97 (T97) | *Alt.= 1400.0 km, 01-Jan-2014, Inbound, 32 days (2:1 resonant transfer) to Titan 98* | | | | | | | |
| 368 | T97+4d | CTWIMP | 05-Jan-2014 16:04:05 | 0.001 | 0.478 | 0.378 | 1.004 | MEA |
| 369 | ∼apoapsis | **B·R**, **B·T**, TF | 25-Jan-2014 14:52:05 | 0.004 | 0.095 | 0.097 | 0.221 | RCS |
| 370 | T98-3d | **B·R**, **B·T**, TF | 30-Jan-2014 20:52:05 | | 0.019 | 0.011 | 0.034 | RCS |
| Titan 98 (T98) | *Alt.= 1235.7 km, 02-Feb-2014, Inbound, 32 days (2:1 resonant transfer) to Titan 99* | | | | | | | |
| 371 | T98+3d | CTWIMP | 05-Feb-2014 14:08:05 | 0.005 | 0.423 | 0.350 | 0.934 | MEA |
| 372 | ∼apoapsis | **B·R**, **B·T**, TF | 17-Feb-2014 13:25:05 | 1.71 | 1.755 | 0.107 | 1.873 | MEA |
| 373 | T99-3d | **B·R**, **B·T**, TF | 03-Mar-2014 18:57:05 | | 0.064 | 0.045 | 0.129 | RCS |
| Titan 99 (T99) | *Alt.= 1500.0 km, 06-Mar-2014, Inbound, 32 days (2:1 resonant transfer) to Titan 100* | | | | | | | |
| 374 | T99+4d | CTWIMP | 10-Mar-2014 12:13:05 | 0.002 | 0.292 | 0.239 | 0.624 | MEA |
| 375 | ∼apoapsis | **B·R**, **B·T**, TF | 20-Mar-2014 11:29:05 | 0.548 | 0.530 | 0.123 | 0.675 | MEA |
| 376 | T100-3d | **B·R**, **B·T**, TF | 04-Apr-2014 10:30:05 | | 0.056 | 0.039 | 0.111 | RCS |
| Titan 100 (T100) | *Alt.= 963.0 km, 07-Apr-2014, Inbound, 40 days to Titan 101* | | | | | | | |
| 377 | T100+4d | CTWIMP | 11-Apr-2014 10:01:05 | 0.002 | 0.138 | 0.125 | 0.308 | MEA |
| 378 | ∼apoapsis | **B·R**, **B·T**, TF | 24-Apr-2014 09:02:05 | 0.004 | 0.543 | 0.446 | 1.168 | MEA |
| 379 | T101-3d | **B·R**, **B·T**, TF | 14-May-2014 07:47:05 | | 0.080 | 0.063 | 0.166 | RCS |
| Titan 101 (T101) | *Alt.= 2993.8 km, 17-May-2014, Outbound, 32 days (2:1 resonant transfer) to Titan 102* | | | | | | | |

**Table 7. OTM Strategy, ΔV Statistics: OTM-380 through OTM-424**

| OTM No. | Description/ Orbit Location | Control Law/ Targets | Maneuver Time (ET/SCET) | Determ. ΔV (m/s) | Mean (m/s) | 1-$\sigma$ (m/s) | 90% (m/s) | Engine Type |
|---|---|---|---|---|---|---|---|---|
| 380 | T101+4d | CTWIMP | 21-May-2014 07:17:05 | 0.006 | 0.359 | 0.271 | 0.752 | MEA |
| 381 | ∼apoapsis | **B·R**, **B·T**, TF | 03-Jun-2014 06:16:05 | 0.002 | 0.019 | 0.013 | 0.038 | RCS |
| 382 | T102-3d | **B·R**, **B·T**, TF | 15-Jun-2014 11:45:05 | | 0.022 | 0.014 | 0.042 | RCS |
| Titan 102 (T102) | *Alt.= 3658.6 km, 18-Jun-2014, Outbound, 32 days (2:1 resonant transfer) to Titan 103* | | | | | | | |
| 383 | T102+4d | CTWIMP | 22-Jun-2014 05:00:05 | 0.008 | 0.233 | 0.174 | 0.481 | MEA |
| 384 | ∼apoapsis | **B·R**, **B·T**, TF | 05-Jul-2014 03:58:05 | 0.006 | 0.015 | 0.010 | 0.028 | RCS |
| 385 | T103-3d | **B·R**, **B·T**, TF | 17-Jul-2014 09:41:05 | | 0.019 | 0.012 | 0.035 | RCS |
| Titan 103 (T103) | *Alt.= 5103.2 km, 20-Jul-2014, Outbound, 32 days (2:1 resonant transfer) to Titan 104* | | | | | | | |
| 386 | T103+4d | CTWIMP | 24-Jul-2014 02:41:05 | 0.005 | 0.153 | 0.116 | 0.310 | MEA |
| 387 | ∼apoapsis | **B·R**, **B·T**, TF | 09-Aug-2014 08:09:05 | 12.446 | 12.438 | 0.024 | 12.465 | MEA |
| 388 | T104-3d | **B·R**, **B·T**, TF | 18-Aug-2014 07:38:05 | | 0.095 | 0.063 | 0.187 | RCS |
| Titan 104 (T104) | *Alt.= 964.0 km, 21-Aug-2014, Outbound, 32 days (2:1 resonant transfer) to Titan 105* | | | | | | | |
| 389 | T104+4d | CTWIMP | 25-Aug-2014 07:07:05 | 0.006 | 0.698 | 0.541 | 1.466 | MEA |
| 390 | ∼apoapsis | **B·R**, **B·T**, TF | 07-Sep-2014 06:20:05 | 1.255 | 1.209 | 0.060 | 1.269 | MEA |
| 391 | T105-3d | **B·R**, **B·T**, TF | 19-Sep-2014 05:34:05 | | 0.066 | 0.044 | 0.131 | RCS |
| Titan 105 (T105) | *Alt.= 1400.0 km, 22-Sep-2014, Outbound, 32 days (2:1 resonant transfer) to Titan 106* | | | | | | | |
| 392 | T105+4d | CTWIMP | 26-Sep-2014 05:03:05 | 0.006 | 0.618 | 0.483 | 1.287 | MEA |
| 393 | ∼apoapsis | **B·R**, **B·T**, TF | 09-Oct-2014 04:17:05 | 1.083 | 1.029 | 0.069 | 1.097 | MEA |
| 394 | T106-3d | **B·R**, **B·T**, TF | 21-Oct-2014 03:31:05 | | 0.080 | 0.053 | 0.155 | RCS |
| Titan 106 (T106) | *Alt.= 1013.0 km, 24-Oct-2014, Outbound, 48 days (3:1 resonant transfer) to Titan 107* | | | | | | | |
| 395 | T106+4d | CTWIMP | 27-Oct-2014 20:46:05 | 0.003 | 0.744 | 0.488 | 1.410 | MEA |
| 396 | ∼apoapsis | **B·R**, **B·T**, TF | 22-Nov-2014 01:45:05 | 0.169 | 0.235 | 0.133 | 0.386 | MEA |
| 397 | T107-3d | **B·R**, **B·T**, TF | 07-Dec-2014 18:31:05 | | 0.092 | 0.057 | 0.169 | RCS |
| Titan 107 (T107) | *Alt.= 980.0 km, 10-Dec-2014, Outbound, 32 days (2:1 resonant transfer) to Titan 108* | | | | | | | |
| 398 | T107+3d | CTWIMP | 14-Dec-2014 00:16:05 | 0.005 | 0.425 | 0.334 | 0.883 | MEA |
| 399 | ∼apoapsis | **B·R**, **B·T**, TF | 29-Dec-2014 23:32:05 | 0.992 | 0.958 | 0.105 | 1.063 | MEA |
| 400 | T108-3d | **B·R**, **B·T**, TF | 08-Jan-2015 22:48:05 | | 0.161 | 0.103 | 0.309 | MEA |
| Titan 108 (T108) | *Alt.= 970.0 km, 11-Jan-2015, Outbound, 32 days (2:1 resonant transfer) to Titan 109* | | | | | | | |
| 401 | T108+3d | CTWIMP | 14-Jan-2015 22:33:05 | 0.002 | 0.980 | 0.649 | 1.868 | MEA |
| 402 | ∼apoapsis | **B·R**, **B·T**, TF | 31-Jan-2015 21:35:05 | 1.27 | 1.277 | 0.146 | 1.445 | MEA |
| 403 | T109-3d | **B·R**, **B·T**, TF | 09-Feb-2015 21:07:05 | | 0.066 | 0.034 | 0.111 | RCS |
| Titan 109 (T109) | *Alt.= 1200.0 km, 12-Feb-2015, Outbound, 32 days (2:1 resonant transfer) to Titan 110* | | | | | | | |
| 404 | T109+3d | CTWIMP | 15-Feb-2015 20:37:05 | 0.002 | 0.958 | 0.664 | 1.883 | MEA |
| 405 | ∼apoapsis | **B·R**, **B·T**, TF | 04-Mar-2015 19:40:05 | 0.006 | 0.097 | 0.061 | 0.172 | RCS |
| 406 | T110-3d | **B·R**, **B·T**, TF | 13-Mar-2015 19:11:05 | | 0.030 | 0.017 | 0.052 | RCS |
| Titan 110 (T110) | *Alt.= 2274.5 km, 16-Mar-2015, Outbound, 51 days to Titan 111* | | | | | | | |
| 407 | T110+3d | CTWIMP | 19-Mar-2015 18:42:05 | 0.004 | 0.459 | 0.307 | 0.907 | MEA |
| 408 | ∼apoapsis | **B·R**, **B·T**, TF | 20-Apr-2015 16:30:05 | 0.006 | 0.018 | 0.009 | 0.030 | RCS |
| 409 | T111-3d | **B·R**, **B·T**, TF | 04-May-2015 15:31:05 | | 0.034 | 0.023 | 0.065 | RCS |
| Titan 111 (T111) | *Alt.= 2721.5 km, 07-May-2015, Inbound, 40 days to Dione 4* | | | | | | | |
| 410 | T111+4d | CTWIMP | 11-May-2015 15:01:05 | 0.011 | 0.390 | 0.325 | 0.837 | MEA |
| 411 | ∼apoapsis | **B·R**, **B·T**, TF | 08-Jun-2015 13:01:05 | 0.012 | 0.329 | 0.255 | 0.691 | MEA |
| 412 | D4-3d | **B·R**, **B·T**, TF | 13-Jun-2015 12:46:05 | | 0.026 | 0.014 | 0.046 | RCS |
| Dione 4 (D4) | *Alt.= 516.3 km, 16-Jun-2015, Outbound, 21 days to Titan 112* | | | | | | | |
| 413 | D4+4d | CTWIMP | 20-Jun-2015 12:15:05 | 0.011 | 0.206 | 0.163 | 0.429 | MEA |
| 414 | ∼apoapsis | **B·R**, **B·T**, TF | 26-Jun-2015 11:45:05 | 0.011 | 0.172 | 0.143 | 0.364 | MEA |
| 415 | T112-3d | **B·R**, **B·T**, TF | 04-Jul-2015 11:14:05 | | 0.025 | 0.016 | 0.048 | RCS |
| Titan 112 (T112) | *Alt.= 10953.1 km, 07-Jul-2015, Outbound, 42 days to Dione 5* | | | | | | | |
| 416 | T112+3d | CTWIMP | 10-Jul-2015 10:59:05 | 0.01 | 0.180 | 0.121 | 0.339 | MEA |
| 417 | ∼apoapsis | **B·R**, **B·T**, TF | 09-Aug-2015 08:55:05 | 0.019 | 0.026 | 0.017 | 0.051 | RCS |
| 418 | D5-3d | **B·R**, **B·T**, TF | 14-Aug-2015 08:24:05 | | 0.011 | 0.007 | 0.020 | RCS |
| Dione 5 (D5) | *Alt.= 474.6 km, 17-Aug-2015, Inbound, 42 days to Titan 113* | | | | | | | |
| 419 | D5+4d | CTWIMP | 21-Aug-2015 08:08:05 | 0.002 | 0.160 | 0.107 | 0.302 | RCS |
| 420 | ∼periapsis | **B·R**, **B·T**, TF | 08-Sep-2015 06:51:05 | 0.016 | 0.063 | 0.031 | 0.103 | RCS |
| 421 | T113-4d | **B·R**, **B·T**, TF | 25-Sep-2015 05:49:05 | | 0.051 | 0.031 | 0.095 | RCS |
| Titan 113 (T113) | *Alt.= 1035.6 km, 28-Sep-2015, Inbound, 16 days to Enceladus 20* | | | | | | | |
| 422 | T113+3d | CTWIMP | 02-Oct-2015 05:18:05 | 0.016 | 0.943 | 0.692 | 2.051 | MEA |
| 423 | ∼apoapsis | **B·R**, **B·T**, TF | 06-Oct-2015 05:03:05 | 2.702 | 2.532 | 1.058 | 3.822 | MEA |
| 424 | E20-3d | **B·R**, **B·T**, TF | 11-Oct-2015 04:47:05 | | 0.027 | 0.018 | 0.050 | RCS |
| Enceladus 20 (E20) | *Alt.= 1839.7 km, 14-Oct-2015, Outbound, 14 days to Enceladus 21* | | | | | | | |

**Table 8. OTM Strategy, ΔV Statistics: OTM-425 through OTM-469**

| OTM No. | Description/ Orbit Location | Control Law/ Targets | Maneuver Time (ET/SCET) | Determ. ΔV (m/s) | Mean (m/s) | 1-$\sigma$ (m/s) | 90% (m/s) | Engine Type |
|---|---|---|---|---|---|---|---|---|
| 426 | ∼apoapsis | **B·R**, **B·T**, TF | 20-Oct-2015 04:16:05 | 0.008 | 0.352 | 0.252 | 0.681 | MEA |
| 427 | E21-3d | **B·R**, **B·T**, TF | 25-Oct-2015 04:01:05 | | 0.022 | 0.012 | 0.038 | RCS |
| Enceladus 21 (E21) | *Alt.= 50.0 km, 28-Oct-2015, Outbound, 16 days to Titan 114* | | | | | | | |
| 428 | E21+1d | CTWIMP | 29-Oct-2015 03:46:05 | 0.007 | 0.702 | 0.714 | 1.693 | MEA |
| 429 | ∼apoapsis | **B·R**, **B·T**, TF | 05-Nov-2015 03:30:05 | 0.01 | 0.430 | 0.317 | 0.858 | MEA |
| 430 | T114-3d | **B·R**, **B·T**, TF | 10-Nov-2015 03:00:05 | | 0.023 | 0.015 | 0.043 | RCS |
| Titan 114 (T114) | *Alt.= 11919.7 km, 13-Nov-2015, Outbound, 36 days (4:3 Titan resonance) to Enceladus 22* | | | | | | | |
| 431 | T114+3d | CTWIMP | 16-Nov-2015 02:30:05 | 0.011 | 0.084 | 0.097 | 0.222 | RCS |
| 432 | ∼apoapsis | **B·R**, **B·T**, TF | 26-Nov-2015 02:14:05 | 0.025 | 0.210 | 0.155 | 0.416 | MEA |
| 433 | E22-4d | **B·R**, **B·T**, TF | 16-Dec-2015 00:45:05 | | 0.049 | 0.033 | 0.096 | RCS |
| Enceladus 22 (E22) | *Alt.= 5000.0 km, 19-Dec-2015, Outbound, 28 days to Titan 118* | | | | | | | |
| 434 | E22+3d | CTWIMP | 23-Dec-2015 00:30:05 | 0.018 | 0.046 | 0.042 | 0.105 | RCS |
| 435 | ∼periapsis | **B·R**, **B·T**, TF | 30-Dec-2015 00:01:05 | 0.006 | 0.045 | 0.037 | 0.094 | RCS |
| 436 | T115-3d | **B·R**, **B·T**, TF | 12-Jan-2016 23:17:05 | | 0.037 | 0.024 | 0.071 | RCS |
| Titan 115 (T115) | *Alt.= 3817.4 km, 16-Jan-2016, Outbound, 16 days (1:1 resonant transfer) to Titan 116* | | | | | | | |
| 437 | T115+3d | CTWIMP | 18-Jan-2016 23:02:05 | 0.003 | 0.163 | 0.158 | 0.391 | MEA |
| 438 | ∼apoapsis | **B·R**, **B·T**, TF | 23-Jan-2016 22:48:05 | 8.549 | 8.511 | 0.040 | 8.549 | MEA |
| 439 | T116-3d | **B·R**, **B·T**, TF | 28-Jan-2016 22:18:05 | | 0.044 | 0.029 | 0.086 | RCS |
| Titan 116 (T116) | *Alt.= 1400.0 km, 01-Feb-2016, Outbound, 16 days (1:1 resonant transfer) to Titan 117* | | | | | | | |
| 440 | T116+3d | CTWIMP | 03-Feb-2016 22:04:05 | 0.004 | 1.041 | 0.799 | 2.142 | MEA |
| 441 | ∼apoapsis | **B·R**, **B·T**, TF | 08-Feb-2016 21:50:05 | 0.52 | 0.336 | 0.149 | 0.508 | MEA |
| 442 | T117-3d | **B·R**, **B·T**, TF | 13-Feb-2016 21:35:05 | | 0.030 | 0.019 | 0.057 | RCS |
| Titan 117 (T117) | *Alt.= 1018.0 km, 16-Feb-2016, Outbound, 48 days (3:2 resonant transfer) to Titan 118* | | | | | | | |
| 443 | T117+3d | CTWIMP | 19-Feb-2016 21:06:05 | 0.005 | 0.381 | 0.300 | 0.798 | MEA |
| 444 | ∼apoapsis | **B·R**, **B·T**, TF | 25-Mar-2016 18:56:05 | 8.365 | 8.323 | 0.054 | 8.369 | MEA |
| 445 | T118-3d | **B·R**, **B·T**, TF | 01-Apr-2016 18:27:05 | | 0.073 | 0.043 | 0.137 | RCS |
| Titan 118 (T118) | *Alt.= 990.0 km, 04-Apr-2016, Outbound, 32 days (2:1 resonant transfer) to Titan 119* | | | | | | | |
| 446 | T118+3d | CTWIMP | 07-Apr-2016 18:12:05 | 0.002 | 1.319 | 0.980 | 2.652 | MEA |
| 447 | ∼apoapsis | **B·R**, **B·T**, TF | 22-Apr-2016 17:14:05 | 1.824 | 1.743 | 0.101 | 1.832 | MEA |
| 448 | T119-3d | **B·R**, **B·T**, TF | 03-May-2016 16:30:05 | | 0.088 | 0.047 | 0.153 | RCS |
| Titan 119 (T119) | *Alt.= 971.0 km, 06-May-2016, Outbound, 32 days (2:1 resonant transfer) to Titan 120* | | | | | | | |
| 449 | T119+3d | CTWIMP | 09-May-2016 16:00:05 | 0.006 | 0.703 | 0.567 | 1.528 | MEA |
| 450 | ∼apoapsis | **B·R**, **B·T**, TF | 22-May-2016 15:01:05 | 0.146 | 0.115 | 0.048 | 0.155 | RCS |
| 451 | T120-3d | **B·R**, **B·T**, TF | 04-Jun-2016 14:16:05 | | 0.077 | 0.047 | 0.140 | RCS |
| Titan 120 (T120) | *Alt.= 975.0 km, 07-Jun-2016, Outbound, 48 days (3:2 resonant transfer) to Titan 121* | | | | | | | |
| 452 | T120+4d | CTWIMP | 11-Jun-2016 13:46:05 | 0.015 | 0.765 | 0.573 | 1.538 | MEA |
| 453 | ∼apoapsis | **B·R**, **B·T**, TF | 17-Jul-2016 11:14:05 | 1.972 | 1.882 | 0.141 | 2.001 | MEA |
| 454 | T121-3d | **B·R**, **B·T**, TF | 22-Jul-2016 10:43:05 | | 0.109 | 0.075 | 0.210 | RCS |
| Titan 121 (T121) | *Alt.= 976.0 km, 25-Jul-2016, Outbound, 16 days (1:1 resonant transfer) to Titan 122* | | | | | | | |
| 455 | T121+3d | CTWIMP | 28-Jul-2016 10:28:05 | 0.002 | 1.175 | 0.935 | 2.453 | MEA |
| 456 | ∼apoapsis | **B·R**, **B·T**, TF | 02-Aug-2016 10:12:05 | 1.296 | 1.207 | 0.164 | 1.370 | MEA |
| 457 | T122-3d | **B·R**, **B·T**, TF | 07-Aug-2016 09:41:05 | | 0.054 | 0.028 | 0.095 | RCS |
| Titan 122 (T122) | *Alt.= 1599.4 km, 10-Aug-2016, Outbound, 48 days (3:4 resonant transfer) to Titan 123* | | | | | | | |
| 458 | T122+4d | CTWIMP | 14-Aug-2016 09:11:05 | 0.007 | 0.363 | 0.317 | 0.788 | MEA |
| 459 | ∼periapsis | **B·R**, **B·T**, TF | 19-Aug-2016 08:55:05 | 0.101 | 0.204 | 0.142 | 0.406 | MEA |
| 460 | T123-4d | **B·R**, **B·T**, TF | 23-Sep-2016 06:35:05 | | 0.103 | 0.072 | 0.196 | RCS |
| Titan 123 (T123) | *Alt.= 1736.5 km, 27-Sep-2016, Outbound, 48 days (3:5 resonant transfer) to Titan 124* | | | | | | | |
| 461 | T123+3d | CTWIMP | 30-Sep-2016 06:04:05 | 0.028 | 0.476 | 0.503 | 1.192 | MEA |
| 462 | ∼periapsis | **B·R**, **B·T**, TF | 05-Oct-2016 05:49:05 | 0.038 | 0.277 | 0.207 | 0.551 | MEA |
| 463 | T124-4d | **B·R**, **B·T**, TF | 10-Nov-2016 03:30:05 | | 0.082 | 0.055 | 0.153 | RCS |
| Titan 124 (T124) | *Alt.= 1581.6 km, 14-Nov-2016, Outbound, 16 days (1:2 resonant transfer) to Titan 125* | | | | | | | |
| 464 | T124+3d | CTWIMP | 17-Nov-2016 03:15:05 | 0.01 | 0.392 | 0.365 | 0.923 | MEA |
| 465 | ∼apoapsis | **B·R**, **B·T**, TF | 22-Nov-2016 03:00:05 | 0.101 | 0.571 | 0.303 | 0.978 | MEA |
| 466 | T125-3d | **B·R**, **B·T**, TF | 27-Nov-2016 02:29:05 | | 0.112 | 0.081 | 0.226 | RCS |
| Titan 125 (T125) | *Alt.= 3223.1 km, 29-Nov-2016, Outbound, 144 days (9:20 resonant transfer) to Titan 126* | | | | | | | |
| 467 | T125+5d | CTWIMP | 04-Dec-2016 12:29:05 | 0.461 | 0.135 | 0.144 | 0.312 | MEA |
| 468 | ∼apoapsis | **B·R**, **B·T**, TF | 24-Dec-2016 00:59:05 | 0.059 | 0.731 | 0.398 | 1.298 | MEA |
| 469 | T126-4d | **B·R**, **B·T**, TF | 18-Apr-2017 18:12:05 | | 0.135 | 0.075 | 0.240 | RCS |
| Titan 126 (T126) | *Alt.= 979.0 km, 22-Apr-2017, Outbound* | | | | | | | |

The cumulative $\Delta$V cost for the Bridge Sequence and Solstice Mission is presented in Figure 5. The $\Delta$V does not increase between the double flyby because there are no maneuvers between them. With a deterministic $\Delta$V = 119 m/s and the $\Delta$V90% of 163 m/s, the difference between the deterministic $\Delta$V and $\Delta$V90% is $\sim$44 m/s. The mean statistical $\Delta$V cost per encounter is 0.60 m/s over 73 encounters (T71–T126).

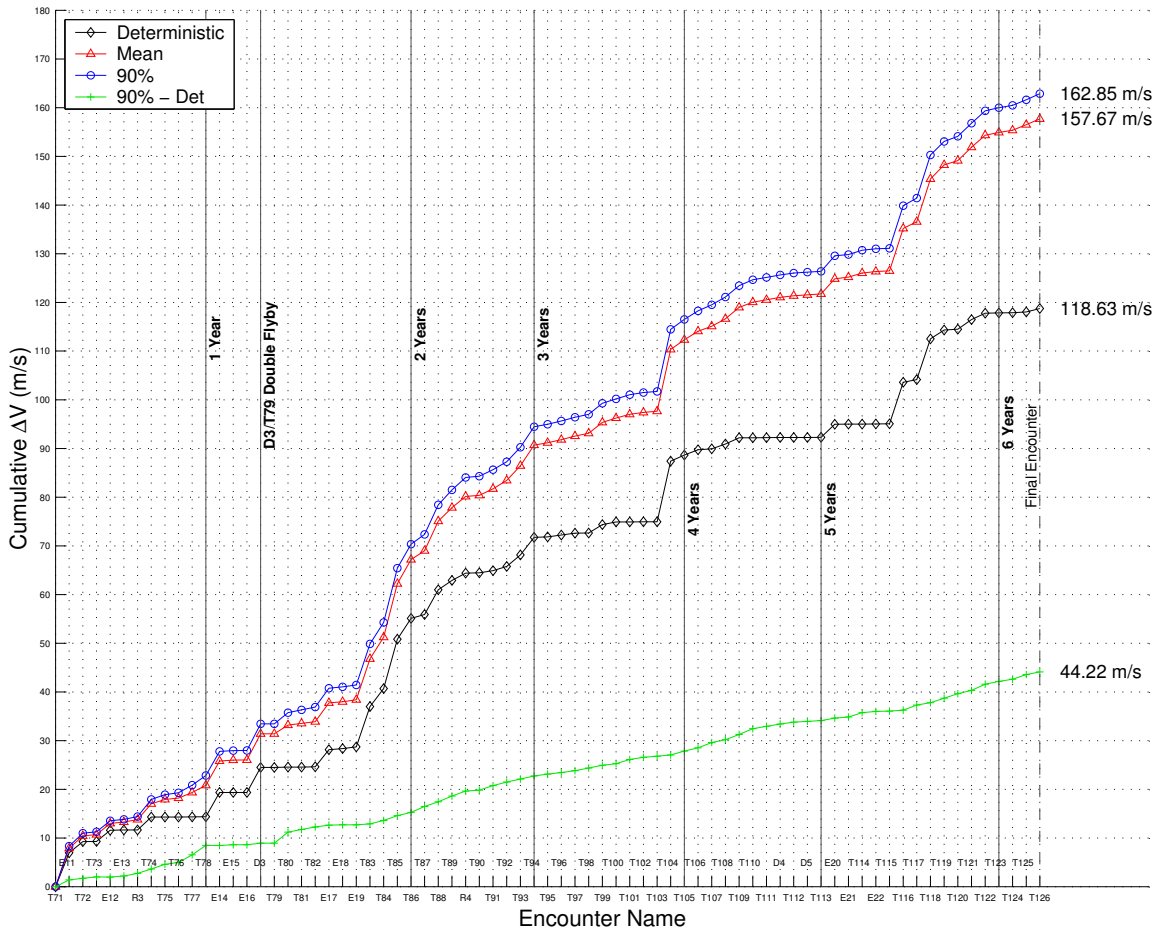


**Figure 5. Cumulative $\Delta$V Cost Using OD Covariance**

## Maneuver Cancellation

In general, when a maneuver design produces a $\Delta$V less than 9 mm/s (excluding dead-band tightening), or when there is an appropriately small $\Delta$V cost (or savings), analysis for maneuver cancellation and/or target biasing is conducted. The cancellation of a maneuver is favored because it reduces spacecraft use and ground-system stress, but only takes place if certain conditions are met. Specifically, consideration is given to maneuver size and whether cancellation of a maneuver is allowable to stay on tour, acceptable given changes to the trajectory and the next target asymptote, and satisfactory for navigation pointing and science requirements. Also, a review is made on effects to downstream maneuvers and $\Delta$V penalties. A streamlined procedure was developed to address the maneuver cancellation analysis because this has become so frequently reviewed in operations.[2,15]

## CONCLUSIONS

The Cassini navigation team allotted 0.6 m/s per encounter[†] statistical $\Delta$V margin in order to derive an upper bound on the usable $\Delta$V for deterministic maneuvers in the trajectory design. This had to be done because in order for the Cassini spacecraft to successfully remain in Saturn orbit through its summer solstice and do meaningful science along the way, all remaining propellant would have to be utilized. All unique features of the Solstice tour (high Titan flybys, near-periapsis maneuvers, etc.), had to be given special attention when it came to reducing the statistical $\Delta$V cost. Our analysis was successful because we achieved a mean statistical $\Delta$V cost of 0.6 m/s per encounter. Future missions that have the opportunity to fly until propellant runs out and further our knowledge could plan their mission design and statistical $\Delta$V analysis in a similar way, provided they base their statistical margin off of their own flight experience.

## ACKNOWLEDGMENT

The authors would like to thank Brent Buffington and Yungsun Hahn for assisting in the work of this paper, and Sean Wagner for editing. This research was carried out at the Jet Propulsion Laboratory, California Institute of Technology, under a contract with the National Aeronautics and Space Administration.

## REFERENCES

[1] Wagner, S.V., Goodson, T.D., Buffington, B.B., Hahn, Y., Strange, N.J., and Wong, M.C., "Cassini–Huygens Maneuver Experience: First Year of Saturn Tour," AAS/AIAA Astrodynamics Specialist Conference, Lake Tahoe, CA, AAS Paper 05-287, Aug. 7–11, 2005.

[2] Wagner, S.V., Gist, E.M., Goodson, T.D., Hahn, Y., Stumpf, P.W., and Williams, P.N., "Cassini–Huygens Maneuver Experience: Second Year of Saturn Tour," AIAA/AAS Astrodynamics Specialist Conference, Keystone, CO, AIAA Paper 2006-6663, Aug. 21–24, 2006.

[3] Williams, P.N., Gist, E.M., Goodson, T.D., Hahn, Y., Stumpf, P.W., and Wagner, S.V., "Cassini–Huygens Maneuver Experience: Third Year of Saturn Tour," AAS/AIAA Astrodynamics Specialist Conference, Mackinac Island, MI, AAS Paper 07-254, Aug. 19–23, 2007.

[4] Goodson, T.D., and Williams, P.N., "Cassini–Huygens Maneuver Experience: Ending the Prime Mission," AIAA/AAS Astrodynamics Specialist Conference, Honolulu, HI, AIAA Paper 2008-6751, Aug. 18–21, 2008.

[5] Gist, E.M., Ballard, C.G., Hahn, Y., Stumpf, P.W., Wagner, S.V., and Williams, P.N., "Cassini–Huygens Maneuver Experience: First Year of the Equinox Mission," AAS/AIAA Astrodynamics Specialist Conference, AAS Paper 09-349, Aug. 9–13, 2009.

[6] Ballard, C.G., Arrieta, J., Hahn, Y., Stumpf, P.W., Wagner, S.V., and Williams, P.N., "Cassini Maneuver Experience: Ending the Equinox Mission," AIAA/AAS Astrodynamics Specialist Conference, AIAA Paper 2010-8257, Aug. 2–6, 2010.

[7] Wagner, S. V., Arrieta, J., Ballard, C. G., Hahn, Y., Stumpf, P. W., and Valerino, P. N., "Cassini Solstice Mission Maneuver Experience: Year One," in *AAS/AIAA Astrodynamics Specialists Conference*, Girdwood, AK, AAS 11–528, July 31 - August 4, 2011.

[8] Williams, P.N., Ballard, C.G., Gist, E.M., Goodson, T.D., Hahn, Y., Stumpf, P.W., and Wagner, S.V., "Flight Path Control Design for the Cassini Equinox Mission," AAS/AIAA Space Flight Mechanics Meeting, AAS Paper 09-223, Feb. 8–12, 2009.

[9] Goodson, T.D., "The Unreachable Cone of Main-Engine Maneuvers", JPL IOM 343C-08-001, Dec. 23, 2008

[10] Wagner, S.V., "Maneuver Execution-Error Model 2008-01 Recommendation," JPL IOM 343C-09-001, Jan. 9, 2009.

[11] Kizner, W., "A Method of Describing Miss Distances for Lunar and Interplanetary Trajectories," JPL External Publication 674, Aug. 1, 1959.

[†] The Prime and Equinox Missions had 1 m/s and 0.8 m/s allotted, respectively

[12] Chadwick, C., and Miller, L.J., "An Overview of the ADAM Maneuver Analysis System," AAS/AIAA Astrodynamics Specialist Conference, Lake Placid, NY, AAS Paper 83–411, Aug. 1983.

[13] Ballard, C.G., "Backup Maneuver Studies for the Cassini Solstice Mission," JPL IOM 343C-10-007, Sep. 3, 2010.

[14] Ionasescu, R., "Orbit Determination Covariance Analysis for the Cassini Solstice Mission," AIAA/AAS Astrodynamics Specialist Conference, AIAA-2010-8264, Aug. 2–5, 2010.

[15] Wagner, S.V., Ballard, C.G., Gist, E.M., Goodson, T.D., Hahn, Y., Stumpf, P.W., and Williams, P.N., "Communicating Navigation Data Inside the Cassini-Huygens Project: Visualizations and Tools ," AIAA/AAS Astrodynamics Specialist Conference, Honolulu, HI, AIAA-2008-6748, Aug. 18–21, 2008.

[16] Smith, J., and Buffington, B., "Overview of the Cassini Solstice Mission Trajectory," in *AAS/AIAA Astrodynamics Specialist Conference*, Pittsburgh, PA, in *AAS/AIAA Space Flight Mechanics Meeting*, AAS 09–351, August 9-13, 2009.

[17] Jones, J.B., and Webster, J.L, "Maneuver Execution-Error Model 2006-01 Recommendation," *JPL IOM 3430-06-018* (Internal Document), March 30, 2006.

## APPENDIX: B-PLANE DESCRIPTION

Planet or satellite approach trajectories are typically described in aiming plane coordinates referred to as "B-plane" coordinates[11] (see Figure 6). The B-plane is a plane passing through the target body center and perpendicular to the asymptote of the incoming trajectory (assuming two-body conic motion). The "B-vector," **B**, is a vector in that plane, from the target body center to the piercing-point of the trajectory asymptote. The B-vector specifies where the point of closest approach would be if the target body had no mass and did not deflect the flight path. Coordinates are defined by three orthogonal unit vectors, **S**, **T** and **R**, with the system origin at the center of the target body. The **S** vector is parallel to the spacecraft $\mathbf{V}_\infty$ vector (approximately the velocity vector at the time of entry into the gravitational sphere of influence). **T** is arbitrary, but it is typically specified to lie in the ecliptic plane (Earth Mean Orbital Plane and Equinox of J2000.0 (EMO2000)), or in a body equatorial plane (Earth Mean Equatorial Plane and Equinox of J2000.0 (EME2000)). Finally, **R** completes an orthogonal triad with **S** and **T** (i.e., $\mathbf{R} = \mathbf{S} \times \mathbf{T}$).

A target point can be described in terms of the B-vector dotted into the **R** and **T** vectors ($\mathbf{B} \cdot \mathbf{R}$ and $\mathbf{B} \cdot \mathbf{T}$). The spacecraft state in the B-plane can be represented by the following six quantities: $\mathbf{B} \cdot \mathbf{R}$, $\mathbf{B} \cdot \mathbf{T}$, TF (time-of-flight), $\mathbf{S} \cdot \mathbf{R}$, $\mathbf{S} \cdot \mathbf{T}$, and $C_3$. $\mathbf{S} \cdot \mathbf{R}$ and $\mathbf{S} \cdot \mathbf{T}$ are the declination and right ascension of the incoming asymptote **S** and $C_3$ is the vis-viva integral $V_\infty^2$. The B-plane error (miss) is determined by $\Delta\mathbf{B} \cdot \mathbf{R}$, $\Delta\mathbf{B} \cdot \mathbf{T}$, and $\Delta$TF; the asymptote error is determined by $\Delta\mathbf{S} \cdot \mathbf{R}$, $\Delta\mathbf{S} \cdot \mathbf{T}$, and $\Delta C_3$.

Trajectory errors in the B-plane are often characterized by a 1-$\sigma$ dispersion ellipse, shown in Figure 6. SMAA and SMIA denote the semi-major and semi-minor axes of the ellipse; $\theta$ is the orientation angle of the ellipse measured clockwise from the **T** axis. The dispersion normal to the B-plane is typically given as a 1-$\sigma$ time-of-flight error, where time-of-flight specifies what the time to encounter would be from some given epoch if the magnitude of the B-vector were zero. Alternatively, this dispersion is sometimes given as a 1-$\sigma$ distance error along the **S** direction, numerically equal to the time-of-flight error multiplied by the magnitude of the $\mathbf{V}_\infty$ vector.

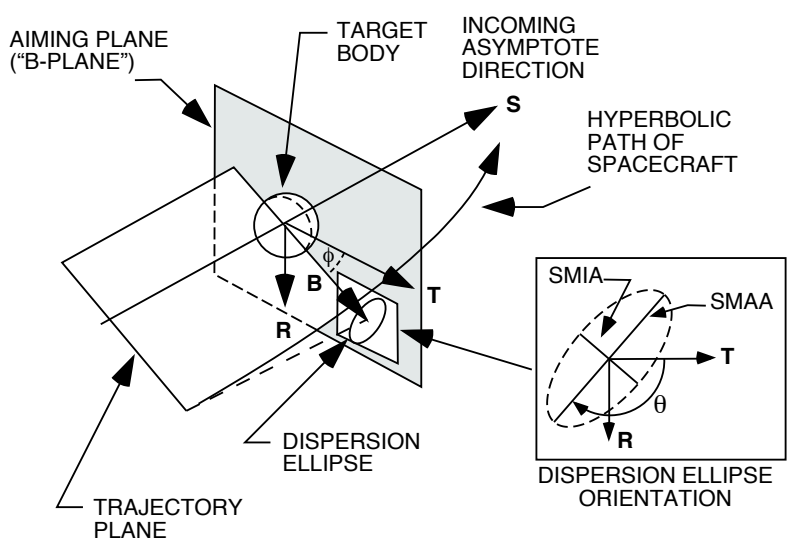


**Figure 6. B-Plane Coordinate System**