Optical design and performance of the Ultra-Compact Imaging Spectrometer

B. Van Gorp*, P. Mouroulis, D. W. Wilson,
J. Rodriguez, H. Sobel, R. G. Sellar, D. Blaney, R. O. Green
Jet Propulsion Laboratory, California Institute of Technology, Pasadena, CA, USA 91109

ABSTRACT

We present the optical design and performance of the Ultra-Compact Imaging Spectrometer (UCIS) currently under development at Caltech's Jet Propulsion Laboratory. The new instrument demonstrates a low optical bench mass of less than 0.5 kg and compact size that enables Mars Rover or other in situ planetary applications. UCIS is a F/4, wide field (30°) design, covering the spectral range 500-2600 nm and is enabled by a simple all aluminum two-mirror telescope and Offner spectrometer. We discuss here the optical design and alignment method that enables this compact and low mass imaging spectrometer and demonstrate successful spectrometer alignment with smile and keystone levels at 2-3% of a pixel width.

Keywords: Imaging spectroscopy

1. INTRODUCTION

Miniaturization of optical instrumentation is generally desired for space applications, especially for in-situ platforms where resources are particularly scarce. Imaging spectrometers in the visible to short-wave infrared range utilizing solar illumination are a particularly attractive option for deriving mineralogical properties of solar system bodies. Three relevant examples are ESA's OMEGA instrument[1] and NASA's MRO-CRISM[2] and Moon Mineralogy Mapper (M3)[3], with the first two orbiting Mars and the third having completed a mission around the Moon.

This work aims to demonstrate an imaging spectrometer system suitable for a variety of in-situ missions and specifically suitable for a Mars-like rover where it could be mounted on the rover mast for determining the mineralogy of the surrounding terrain and guiding the rover towards closer examination of scientifically important targets. The goal is to achieve a mast-mounted total mass of 1.5 kg, with some additional electronics potentially located on the rover body. In order to achieve this goal, the first task is to reduce the optical bench mass and then demonstrate the performance of the resulting spectrometer. The spectrometer and telescope system presented here reduces the 2 kg optical bench mass of M3 by a factor of 4.

The basic system specifications are given in Table 1. The detector selected for the eventual Mars system has larger pixel size than what is used in Table 1. This difference would result in a 6% increase in FOV assuming an IFOV of 2 mrad and no increase in telescope size.

Table 1. Spectrometer Specifications.

Spectral	Range	500-2600 nm
	Sampling	10 nm
Spatial	Field of view	30 deg
	Instantaneous FOV	1.4 mrad
	Spatial swath	380 pixels
Radiometric	Range	0 – 97% R
	SNR	>300 *
Uniformity	Spectral cross-track	>97% **
	Spectral IFOV mixing	< 3% ***

*: specified through entire spectral range, for typical hematite reflectance. **: straightness of monochromatic slit image (smile <3% of pixel width). ***: misregistration of spectrum to array row (keystone)

* byron.vangorp@jpl.nasa.gov; phone 1 818 354-2340

2. OPTICAL DESIGN

The starting point for the present design was the successful M3 spectrometer design, which however, had to be substantially reduced in size. With an Offner design, significant reduction in size can be achieved by splitting the primary and tertiary into independent mirrors[4]. Potentially additional mass savings are possible if the optimization technique of ref. 5 is fully employed, which effectively permits somewhat larger aberration for the benefit of overall uniformity of response. Figure 1 shows the M3 spectrometer design and a second version with the same specifications (slit length, spectral and spatial resolution, spectral range, smile, keystone, etc.) but significantly smaller size. The M3 system covers a 24° field with 0.7 mrad spatial sampling and the spectral range 400-3000 nm with 10 nm sampling. The F-number is 3.5. The basic optical system has been described in ref. 6.

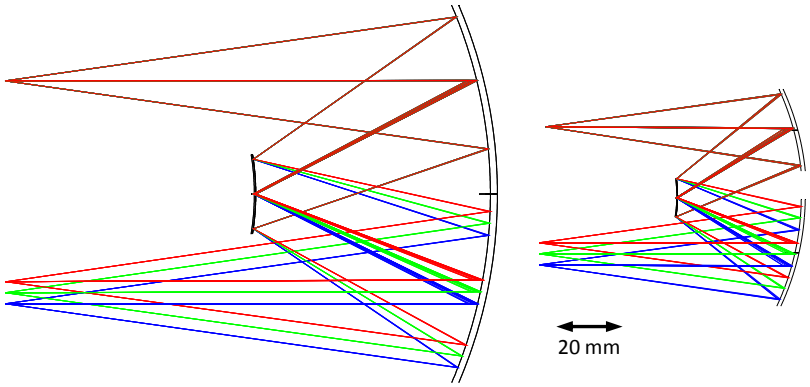

Figure 1. Spectrometer raytrace of the Moon Mineralogy Mapper (M3) (left), and a size-reduced version with the same specifications (right)

The reduction in size achieved by the three-mirror, re-optimized Offner form, while significant, introduces additional complications in the mechanical design. Orbiting spectrometers such as M3 have their integration time determined by the platform speed. On the other hand, for in –situ applications the integration time can be varied. Thus it is feasible to slow down the spectrometer optical speed and increase the integration time in order to achieve the same result. An optically slower system then also allows the use of a simpler two-mirror Offner construction. In addition, the slit length is reduced by 37% (even though the telescope field of view is increased). Although a larger slit is possible, it is not required by the specifications of a Mars in-situ mission which would tend to be limited in the amount of data that can be transmitted. Thus we arrive at the optical design for the set of specifications that were shown in Table 1. A raytrace of this system is seen in Figure 2. The three-mirror anastigmat telescope of the M3 design has also been replaced by a two-mirror system that achieves the same performance but simplifies alignment and also points the beam in a convenient direction away from the spectrometer without the use of an additional fold.

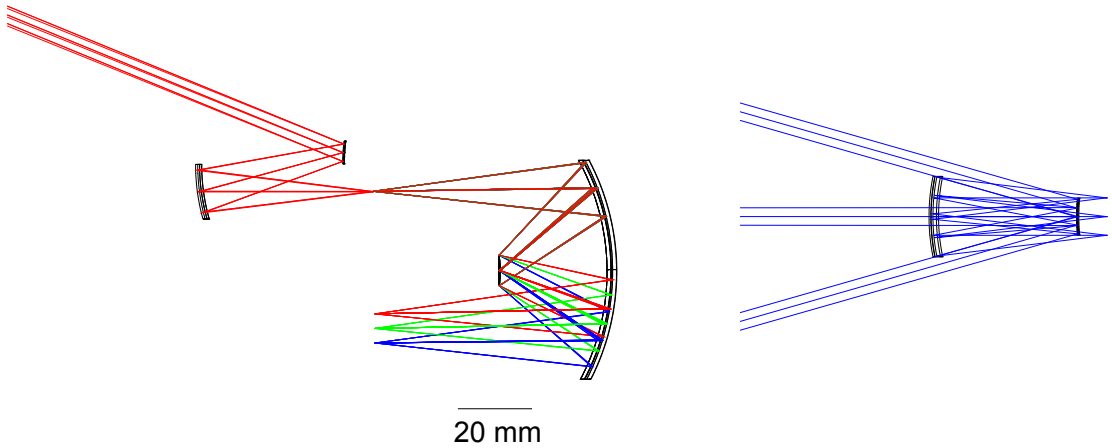

Figure 2. UCIS optical system. Left: complete system in spectral direction. Right: telescope only, in field direction.

Although it has been designed for a larger pixel size, the spectrometer performs well even with the 27 µm pixel size of the detector that was available for this prototype. However, the grating dispersion was adjusted in order to provide the same spectral sampling as an eventual space system (10 nm/pixel). Figure 3 shows the energy in a 27 µm square for all field positions and for the worst-case wavelength. It can be seen that the energy in a pixel is close to the diffraction limit.

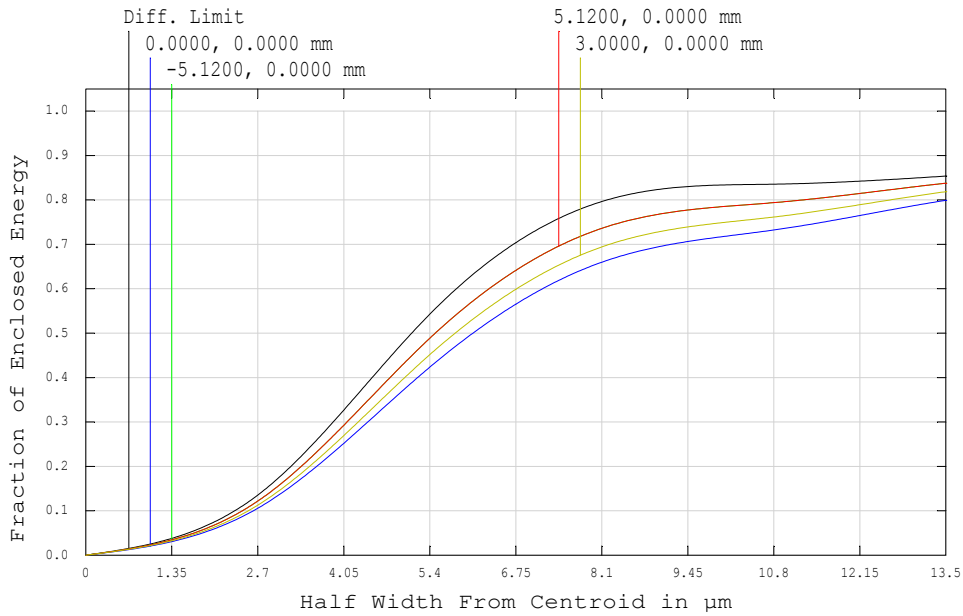

Figure 3. Ensquared energy as a function of distance from the spot centroid. The right-hand limit represents the energy inside a detector pixel. The topmost curve is the diffraction-limited value. The other three curves are for various fields along the slit.

The telescope, with an rms spot size of 3.3 µm is essentially diffraction-limited for all wavelengths.

The most critical component of the spectrometer is the convex diffraction grating, which is fabricated at JPL using electron-beam lithography.[7] A modified groove type departing from the simple sawtooth profile is required to cover efficiently the entire spectral range in one order. The groove shape is also used to balance the solar spectrum by providing higher efficiency towards the longer wavelengths where solar output is weaker. The grating is shown in Figure 4 and the efficiency that results from the groove shape in Figure 5. It can be seen that the efficiency of the fabricated groove shape conforms closely to the design.

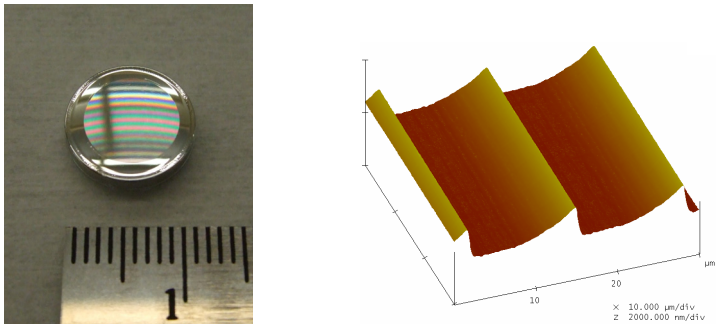

Figure 4. E-beam lithography convex diffraction grating (left) and fabricated diffraction grating grove shape. Note ruler depicted in grating image has units of cm.

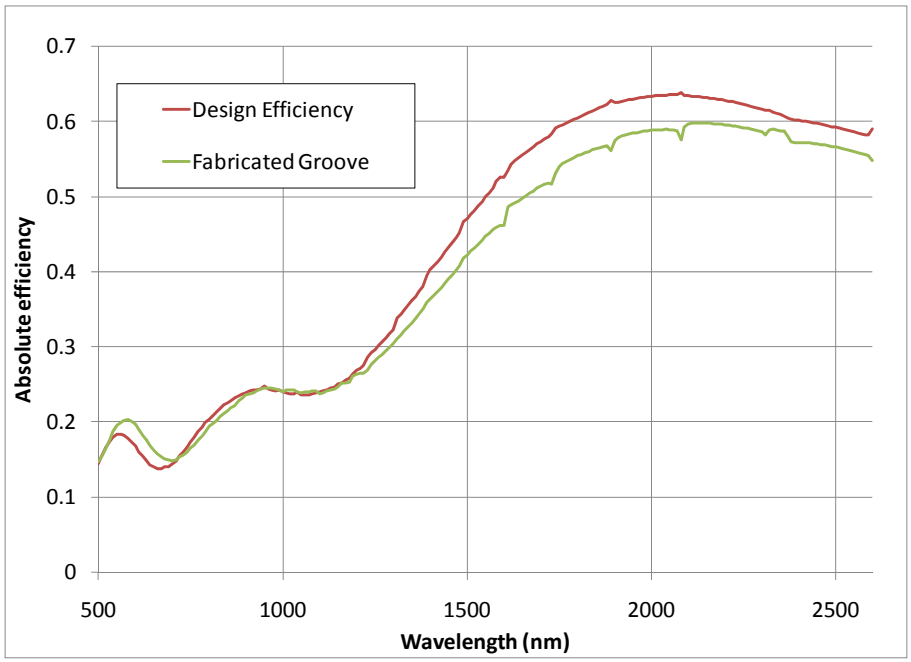

Figure 5. Efficiency of UCIS broadband grating. The desired (design) efficiency emphasizes the long wavelength end. The lower curve is the efficiency as derived from the fabricated (measured) groove shape. The absolute efficiency values include the reflectivity of the Al coating.

This design shows the limits of the all-reflective Offner form with an extended spectral range spanning effectively the entire solar reflected spectrum. While further small gains in size may be possible with the Offner design and even smaller spectrometer systems of alternative designs are possible, the net gain in mass will be limited by the rest of the system, especially the detector and its support structure, thermal system, and electronics. All these additional factors come to dominate the overall mass and require parallel technological developments. One such development is a miniature cryocooler shown below.

3. OPTO-MECHANICAL DESIGN AND ALIGNMENT

The telescope/spectrometer assemblies both consist of all aluminum mirrors and structure, making possible the low mass and thermal load required for space and in-situ applications. Figure 6 shows a cross section of the spectrometer assembly, with the E-beam lithographic slit at the top right, spectrometer mirror to the left, diffraction grating at center, and FPA mount assembly on the bottom right. The slit is formed on a silicon nitride membrane, with the Si wafer mounted using a flexured three leg aluminum mount. The grating is bonded to a six blade flexure that is integral to the spectrometer housing. The flexure provides fine clocking adjustment of the grating. The diamond-turned light weight aluminum spectrometer mirror is bonded to a mirror mount that allows the spectrometer to be disassembled in order to remove an alignment fixture used during mirror bonding.

The spectrometer was assembled using an alignment spacer that positioned the grating relative to the spectrometer mirror during bonding of both optical elements. Bonding the aluminum optics in place enabled relaxed assembly tolerances and solved some fastener clearance issues that arise due to the small size of the spectrometer and optics. After bonding, the alignment fixture was removed via repeatable removal and re-attachment of the spectrometer mirror mount. The placement repeatability was enabled by the same fixture that provided for small decenter and despace adjustments as needed.

The spectrometer operates near room temperature while the FPA is cooled to 180 K. Providing adequate thermal isolation between the spectrometer and FPA while maintaining low mass and overall size is challenging. This is

accomplished using concentric G-10 tubes at the FPA mount, with a cold shield acting as the fold ring between the two G-10 tubes which control its intermediate temperature.

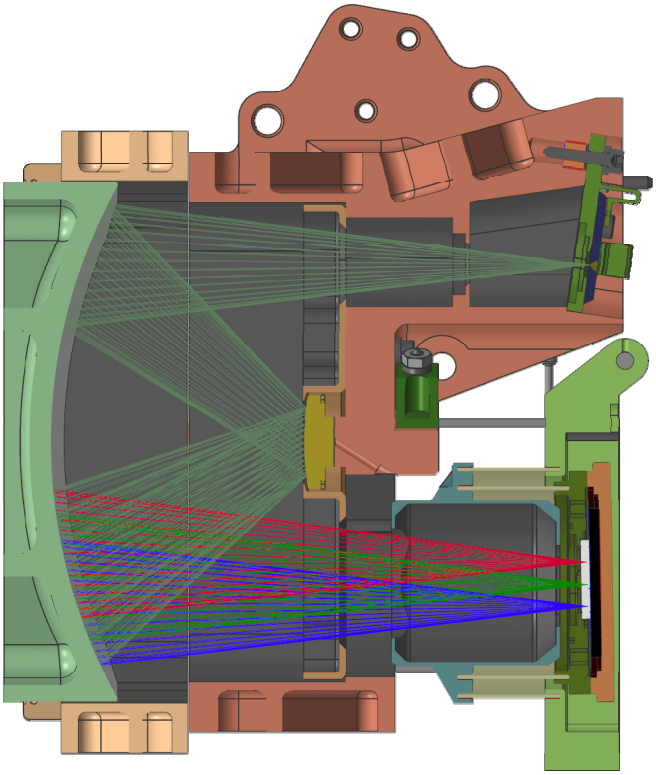

Figure 6. Spectrometer and FPA assembly in cross section, with light incident from the slit.

The telescope assembly is comprised of five Aluminum components depicted in Figure 7, the telescope housing, primary and secondary mirrors and two baffles. The telescope has dimensions of 53x50x40mm and weighs below 80 grams. Alignment is done via a snap-together and bond assembly that has been demonstrated successfully on previous spectrometer two mirror telescope designs. A kinematic interface between telescope and spectrometer was implemented via three-point mounting using spherical washer with conical seats in the telescope housing.

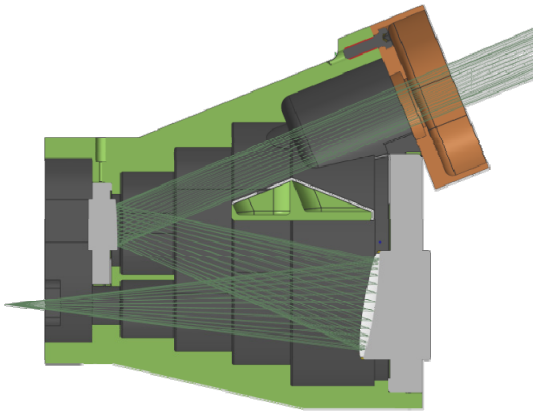

Figure 7. Telescope assembly in cross section, with light incident from the right.

Assembly and alignment of the spectrometer was completed although without integration of the FPA assembly which is currently ongoing. Figure 8 shows the assembled spectrometer and telescope housing.

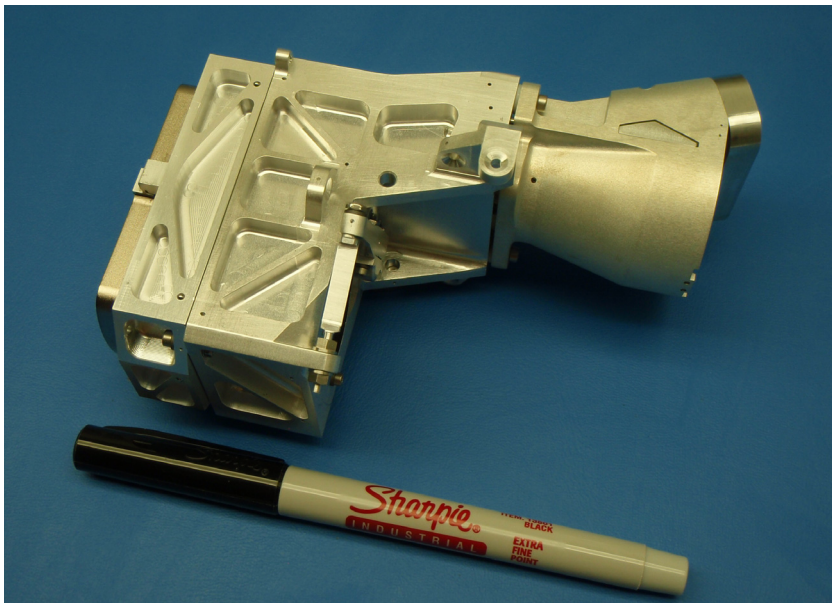

Figure 8. Assembled spectrometer, and telescope housing (dimensions 130x68x95mm).

The mass of the entire assembly will depend on mounting and thermal structures that will be specific to a particular application. Figure 9 shows the heart of the system which is independent of application and environment. The mass of this portion of the system is given in Table 2.

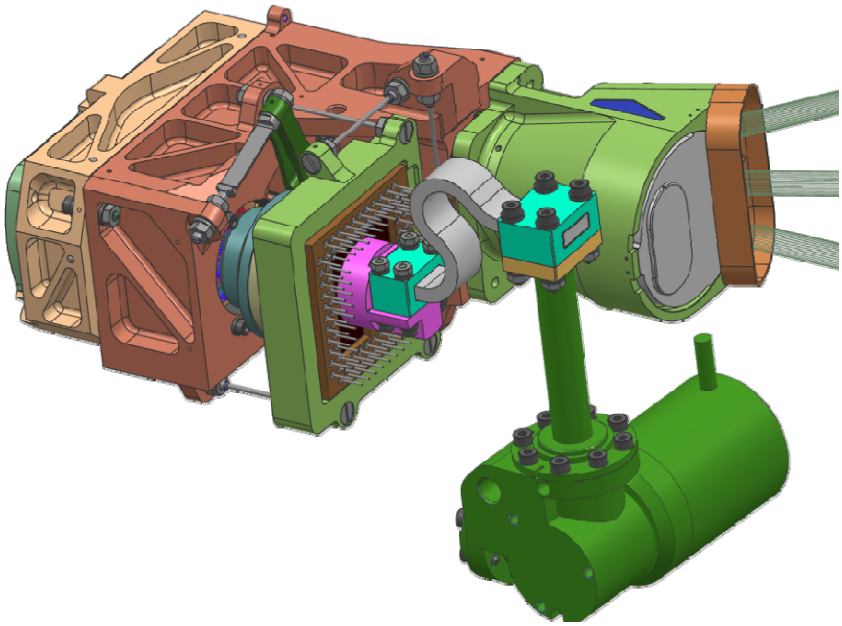

Figure 9. Spectrometer, telescope, detector, cryocooler and thermal strap are the components detailed in the mass table (Table 2).

The optical head and cryocooler have a combined mass of 643 grams. The mass of the optical bench, including spectrometer, FPA assembly and telescope is less than 340 grams. The remaining 300 grams is attributed to the thermal

hardware. Relative to previous instruments such as M3, significant mass reductions were found through the FPA mount design. The FPA assembly weighs below 60 grams compared to ~250 grams on the M3 instrument.

Table 2. Optical head and cryocooler mass.

Description		Mass (gm)
Thermal Hardware	Ricor Cryocooler	185
	Thermal Strap	15
	Cryocooler hardware	65
	Spectrometer TEC / Thermal Strap	30
	Temperature Sensors / Adhesive	11
Optical Bench	Spectrometer Housing Assm	124
	Spectrometer Mirror Assm	53
	Focal Plane Mount Assembly	56
	Telescope Assembly	72
	Fasteners	12
	Detector FPC	20
Optical Head and Cryocooler		**643**

4. COMPLETE SYSTEM DESIGN FOR TERRESTRIAL FIELD SPECTROMETER

As it was intended that this system should be proven in actual field operations, the system design was completed with a vacuum enclosure and thermal control system suitable for a terrestrial desert environment. The complete system is shown in Figure 10. Evidently, the vacuum assembly has been built with no concern for total mass. Upon completion of the assembly and calibration phases, it is intended that the system will prove its utility through mineralogical exploration in the field. These trials are scheduled for spring 2012.

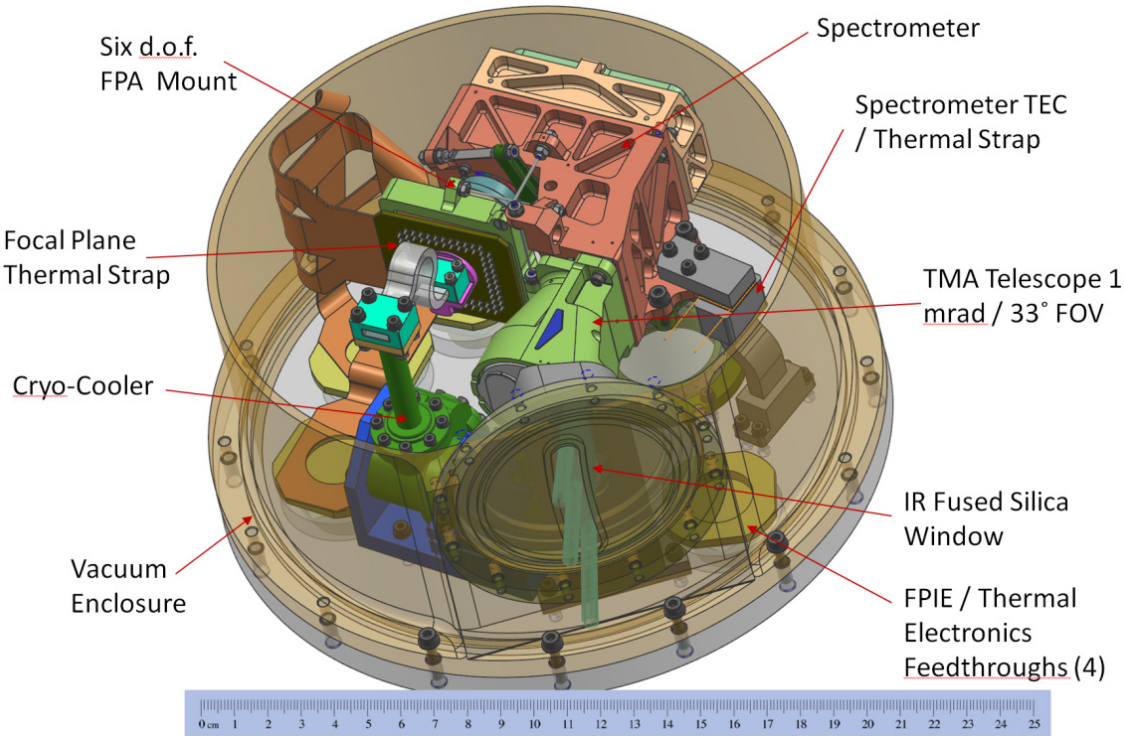

Figure 10. Design of vacuum enclosure to enable spectrometer use in a terrestrial desert environment. The field is in the vertical direction. A rotation stage will scan the spectrometer in azimuth.

5. SPECTROMETER TESTS

At the time of writing it has been possible to assemble the spectrometer and obtain preliminary smile and keystone data that confirm successful mirror and slit alignment. These tests are preliminary in the sense that they have been performed with a silicon detector with a response limited to below 1000 nm, however, additional orders were examined in place of the longer wavelengths. Specifically, we used a 670nm laser and examined up to the fourth order, thus covering an effective range up to 4x670 = 2680 nm. Figure 11 shows the spectral uniformity measurement (smile) across the field of view for all four orders, from first to fourth. The measurement is performed with an integrating sphere covering the entire spectrometer field of view. Each point represents the centroid of the laser image along the spectral direction for the specific spatial pixel ((row). It can be seen that with few exceptions, all points cluster in the ±1% band. The outliers occur every 160 pixels and are due to the specific readout scheme of the array used for these tests. It is expected that these will be further reduced with the final detector array and readout electronics.

Figure 11. 670 nm laser line centroids through field, for grating orders 1-4. The horizontal axis is in pixel number and the vertical axis in pixel fraction. Quadratic interpolated curves are also shown.

A similar type of measurement is possible in the orthogonal direction, where the stimulus is now a spectrally broad point source. In this case, the source image forms a line along the dispersion direction. The strong variation in intensity that is observed as a function of wavelength makes this measurement suffer from more scatter than the previous one, since there are parts of the line (spectrum) where the intensity is minimal. Spectral rebalancing through filters is in theory possible, but in practice very hard. Thus an alternative technique is employed, which involves scanning a point source in the cross-track direction and measuring the centroid location of the resulting distribution (in other words, measuring the cross-track response function of the instrument). The corresponding centroids are then plotted against spectral channel, as in Figure 12. The five curves correspond to five field points spanning the entire instrument field of view. Once again, although the detector is not sensitive to the infrared, there are higher orders illuminating the infrared channels and those are used for the centroiding.

It can be seen that with two exceptions, the points cluster within the ±1% band. Even with all points accounted, the total non-uniformity (or keystone) remains just below 3%. The irregular shape of the curves is indicative that the error is electronic in origin and will likely diminish with a pixel-by-pixel detector gain correction which will be undertaken with the final system detector.

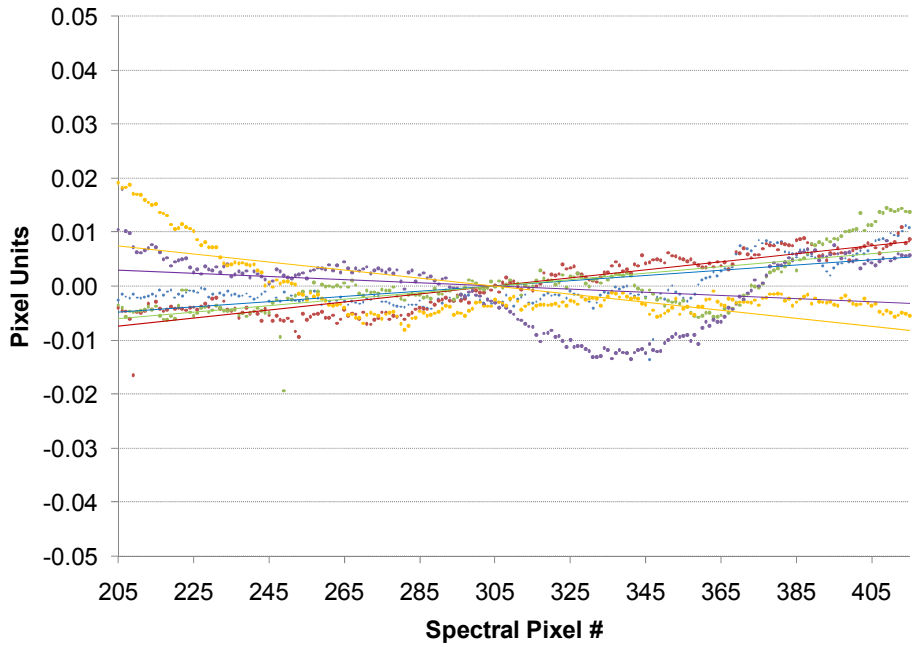

Figure 12. Cross-track response function centroids as a function of spectral channel for five field points spanning the instrument FOV. Linear interpolated curves are also shown.

These geometric uniformity measures are actually the most sensitive indicators of spectrometer component misalignment, so the achievement of such low values is the surest indicator of a successful alignment.

6. CONCLUSIONS

We have demonstrated the optical system of a compact spectrometer suitable for in-situ planetary mineralogy, with an optical head mass of <500 gm that includes the spectrometer, telescope, detector and mount. The addition of a miniature cryocooler and thermal straps brings the mass total to ~650 gm. Although additional hardware will be needed for a realistic space application, this development meets the goals set and opens the road for a rover mast or arm-mounted instrument with a sensor head mass below 1.5kg. A simple contact and bond technique was found to provide satisfactory optical alignment, sufficient to meet the demanding uniformity targets of 97% (or <3% of a pixel error). A complete field system is being assembled to prove the utility of reflectance spectroscopy and the specific spectrometer implementation in understanding local terrain mineralogy.

ACKNOWLEDGMENTS

This research has been performed at the Jet Propulsion Laboratory, California Institute of Technology, under a contract with the National Aeronautics and Space Administration. We thank the UCIS project team members for their contribution to this work. Reference herein to any specific commercial product, process or service by trade name, trademark, manufacturer, or otherwise, does not constitute or imply its endorsement by the United States Government or the Jet Propulsion Laboratory, California Institute of Technology.

REFERENCES

[1] J-P. Bibring and 42 co-authors, "OMEGA: Observatoire pour la Minéralogie, l'Eau, les Glaces et l'Activité" in: "Mars Express: the scientific payload" A. Wilson Ed., pp. 37-49, ESA Publication SP-1240, Noordwijk, Netherlands,.2004.

[2] S. L. Murchie and 42 co-authors, "CRISM (compact Reconnaissance Imaging Spectrometer for Mars) on MRO (Mars Reconnaissance Orbiter", Proc. SPIE 5660, 66-77 (2004).

[3] R. O. Green and 53 co-authors, "The Moon Mineralogy Mapper (M3) Imaging Spectrometer for Lunar Science: Instrument Description, Calibration, On-Orbit Measurements, Science Data Calibration and On-Orbit Validation", *J. Geophys. Res. Planets*, in press 2011

[4] P. Mouroulis, "Low distortion imaging spectrometer designs utilizing convex gratings", Proc. SPIE 3482, 594-601 (1998).

[5] P. Mouroulis, R. O. Green, and T. G. Chrien, "Design of pushbroom imaging spectrometers for optimum recovery of spectroscopic and spatial information," Appl. Opt. 39, 2210-2220 (2000).

[6] P. Mouroulis, R. G. Sellar, D. W. Wilson, J. J. Shea, and R. O. Green, "Optical design of a compact imaging spectrometer for planetary mineralogy", Opt. Eng. **46**, 063001 (2007)

[7] D. W. Wilson, P. D. Maker, R. E. Muller, P. Z. Mouroulis, and J..Backlund, "Recent advances in blazed grating fabrication by electron-beam lithography", Proc. SPIE 5173, 115-126 (2003)