Cassini Attitude Control Operations – Guidelines Levied on Science to Extend Reaction Wheel Life

August 10, 2011

Carson O. Mittelsteadt

Jet Propulsion Laboratory
California Institute of Technology

Copyright 2011 California Institute of Technology. Government sponsorship acknowledged.

Cassini History

- Cassini was launched on October 15, 1997
- Arrived at Saturn on June 30, 2004
- Cassini deployed the European-built Huygens Probe which descended through the Titan atmosphere and landed on its surface on January 14, 2005
- In July 2010 the Cassini Equinox Mission ended and the Cassini Solstice Mission began which has extended Cassini's mission for 7 additional years until September 2017

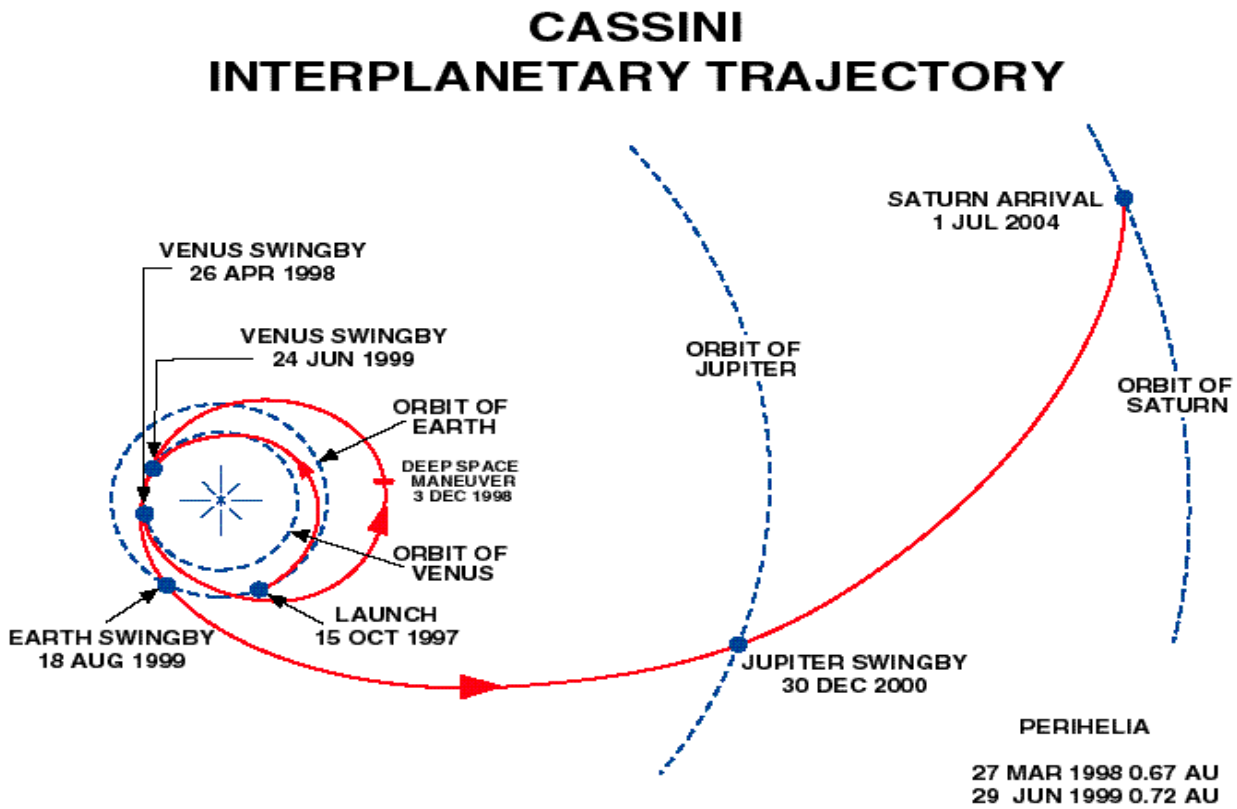

Cassini Configuration

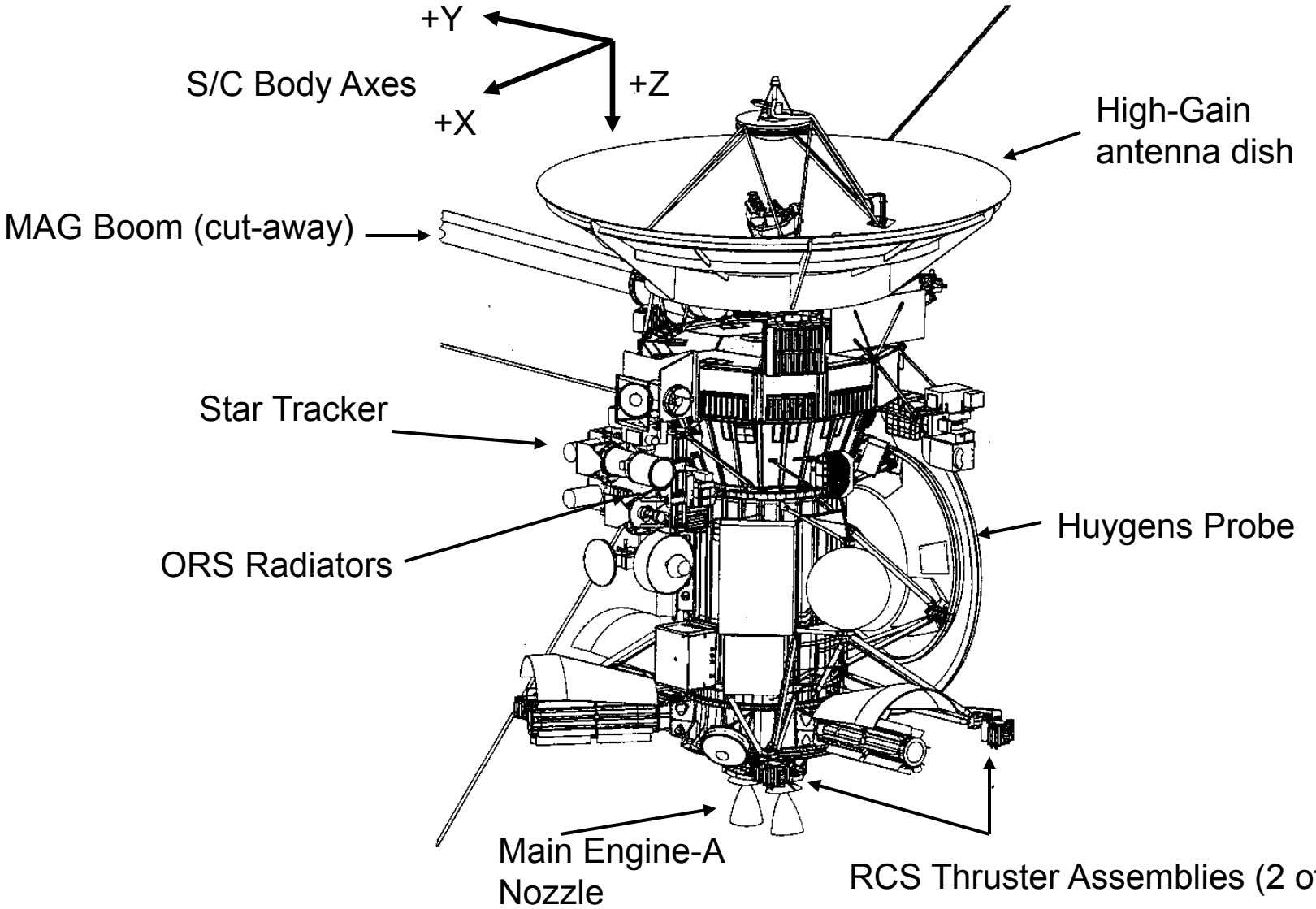

Cassini At Saturn

- **The Cassini spacecraft has been in orbit around Saturn since June 30, 2004**
- **A typical "day" for Cassini at Saturn includes:**

15 Hours
- Executing dozens of turns to and from scientific targets
- Tracking these targets
- Gathering science data for "prime" science instruments and "ride along" science instruments

9 Hours
- Turning to Earth to prepare for data playback
- Downlinking the science and engineering data
  - Rolling the S/C during the downlink allows fields, particles and waves instruments to continue to gather data in parallel with the data playback
- Turning away from Earth to prepare for the next set of science observations

- **The spacecraft has 12 scientific instruments**
  - Most are rigidly mounted to the spacecraft (no scan platform)

- **Most science observations require the entire spacecraft to turn and track any object of scientific interest**

Spacecraft Status

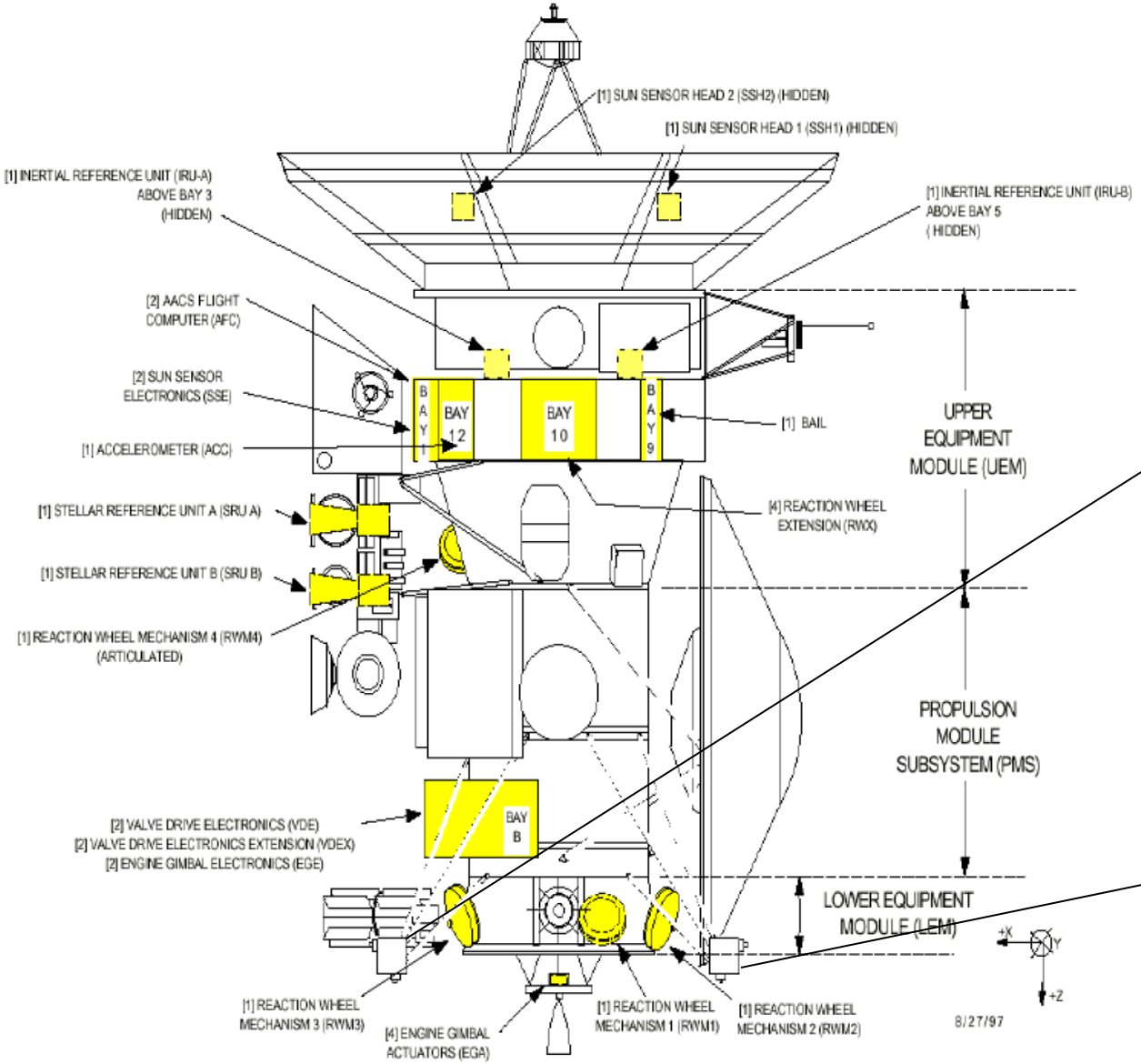

Thruster Diagram

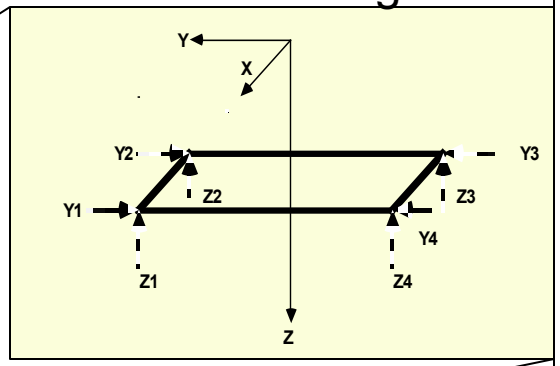

Operations Guideline: Stay Out of the Low-rpm Zone

$$\lambda = \frac{\text{Lubricant Film Thickness}}{\text{Composite Roughness of Ball and Race}}$$

- Boundary Lubrication ($\lambda \leq 1$):
  - Metal-metal contacts promotes wear
  - Excessive heating promotes lubricant polymerization
  - Shorten bearing life
- EHL† condition ($\lambda > 1$):
  - Recommended for long life operations
- Spin rates ≥300 rpm are needed to achieve $\lambda \geq 1$

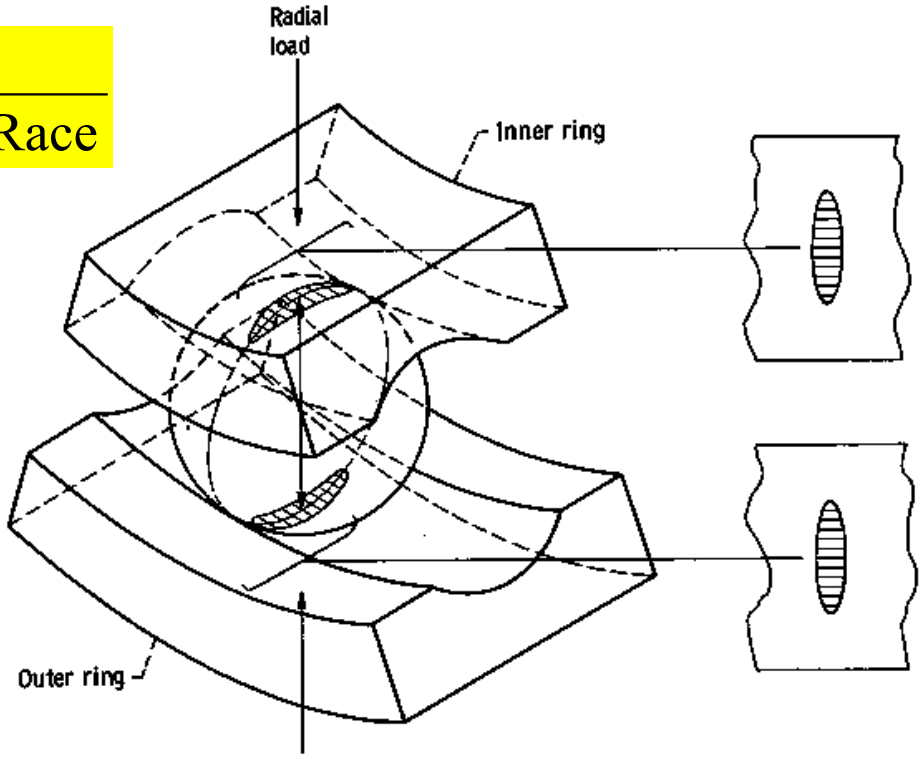

Diester structure

$$C_8H_{17}-O-\overset{\overset{\displaystyle O}{\|}}{C}-C_8H_{16}-\overset{\overset{\displaystyle O}{\|}}{C}-O-C_8H_{17}$$

No metal-to-metal Contacts. Balls "float" on lubricant film

RWA Consumables

Consumables	Current Value	Forecasted 2017 EOM	Specification	Units
RWA Revolutions				
RWA-1	3,230	6,400	4,000	Millions
RWA-2	3,220	6,340	4,000	Of
RWA-3	516	516	4,000	Revolutions
RWA-4	2,740	5,750	4,000	
RWA Low-rpm Time				
RWA-1	7.219	8.258	12.0	Thousands
RWA-2	7.430	8.770	12.0	Of
RWA-3	3.343	3.343	12.0	Hours
RWA-4	3.868	5.317	12.0	
RWA On-Off Cycles				
RWA-1	258	-	300	
RWA-2	258	-	300	Cycles
RWA-3	82	-	300	
RWA-4	248	-	300	

Propellant Consumables

Consumables	Value on 2011-178 (kg)	Loaded Amount (kg)	Percent
<u>Propellant Usage</u>			
Bipropellant Oxidizer	89.0	1869.0	4.8%
Bipropellant Fuel	52.6	1131.0	4.7%
Monopropellant	61.5	132.0	46.6%

RWA Bias Implementation Process

- Various Science teams send pointing files to the Science Planning Team (SP)
- SP integrates the pointing files into one continual sequence
- The Spacecraft Operations Team (SCO) adds engineering activities such as maintenance activities
- The Attitude and Articulation Control Systems Team (AACS) process the sequence using RBOT
  - Biases are placed to minimize the RWA cost function and problem sections

RWA Bearing

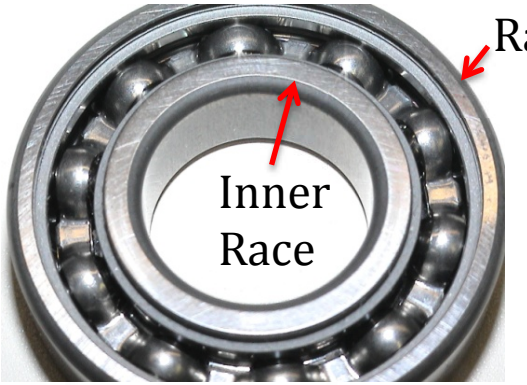

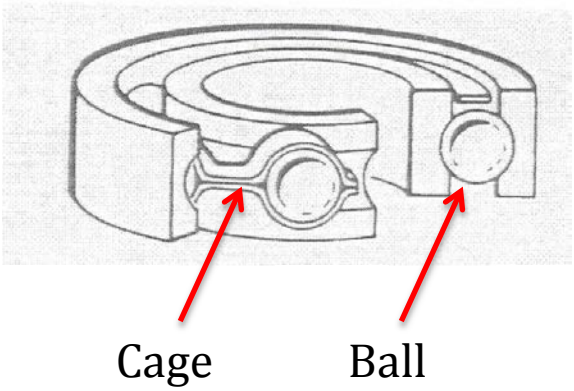

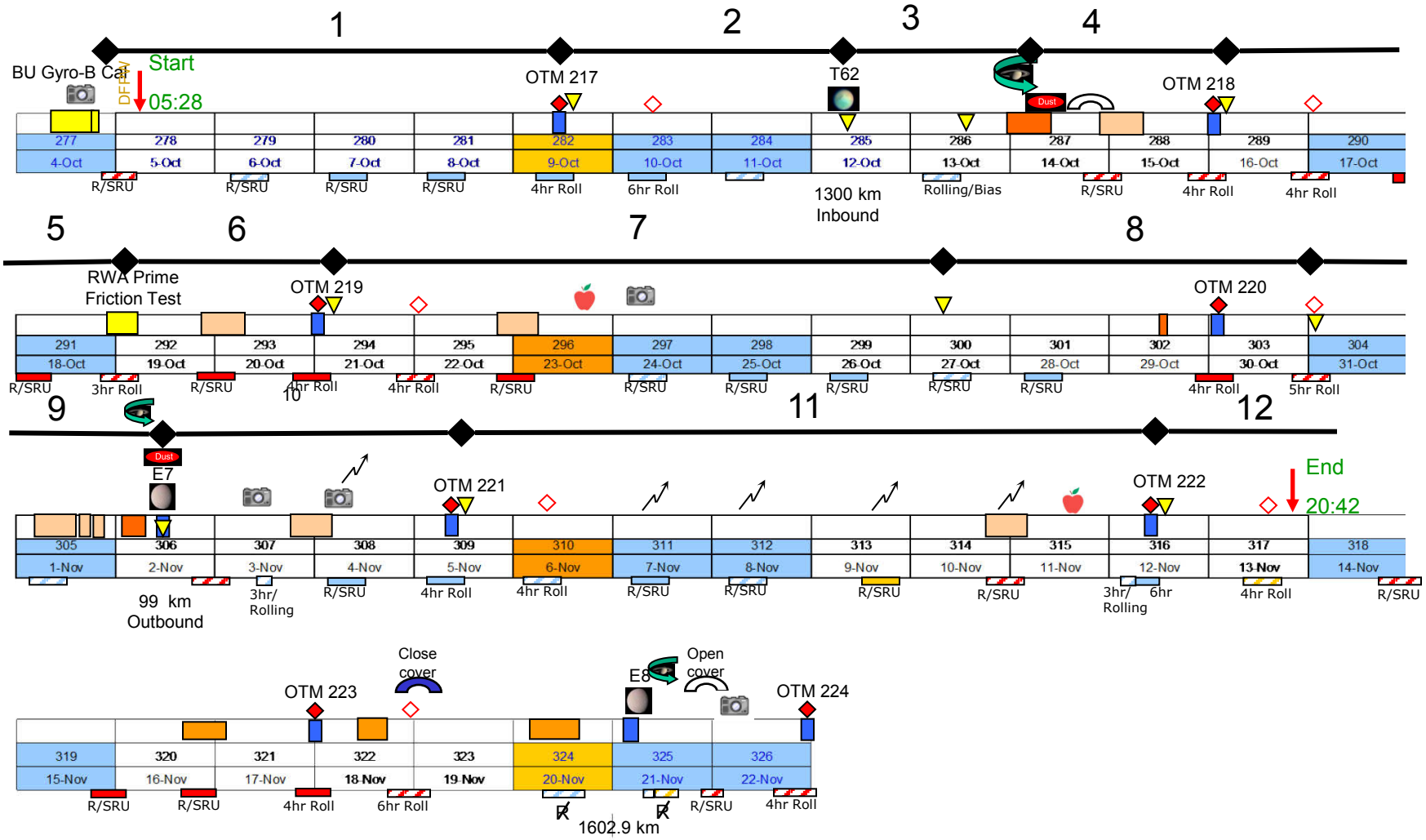
1
2
3
4
BU Gyro-B Cal
DFFAV
Start
05:28
OTM 217
T62
Dust
OTM 218
277 278 279 280 281 282 283 284 285 286 287 288 289 290
4-Oct 5-Oct 6-Oct 7-Oct 8-Oct 9-Oct 10-Oct 11-Oct 12-Oct 13-Oct 14-Oct 15-Oct 16-Oct 17-Oct
R/SRU R/SRU R/SRU R/SRU 4hr Roll 6hr Roll 1300 km Inbound Rolling/Bias R/SRU 4hr Roll 4hr Roll
5
6
7
8
RWA Prime Friction Test
OTM 219
OTM 220
291 292 293 294 295 296 297 298 299 300 301 302 303 304
18-Oct 19-Oct 20-Oct 21-Oct 22-Oct 23-Oct 24-Oct 25-Oct 26-Oct 27-Oct 28-Oct 29-Oct 30-Oct 31-Oct
R/SRU 3hr Roll R/SRU 4hr Roll 4hr Roll R/SRU R/SRU R/SRU R/SRU R/SRU R/SRU 4hr Roll 5hr Roll
10
9
11
12
Dust
E7
OTM 221
OTM 222
End
20:42
305 306 307 308 309 310 311 312 313 314 315 316 317 318
1-Nov 2-Nov 3-Nov 4-Nov 5-Nov 6-Nov 7-Nov 8-Nov 9-Nov 10-Nov 11-Nov 12-Nov 13-Nov 14-Nov
99 km Outbound 3hr/ Rolling R/SRU 4hr Roll 4hr Roll R/SRU R/SRU R/SRU R/SRU 3hr/ Rolling 6hr 4hr Roll R/SRU
Close cover
OTM 223
E8
Open cover
OTM 224
319 320 321 322 323 324 325 326
15-Nov 16-Nov 17-Nov 18-Nov 19-Nov 20-Nov 21-Nov 22-Nov
R/SRU R/SRU 4hr Roll 6hr Roll R/SRU 4hr Roll
1602.9 km
= GLD 34m
= GLD 70m
= MAD 34m
= MAD 70m
= CAN 34m
= CAN 70m
= Engineering activity
= Science activity
= RCS control
= RSS Activity
= RADAR Activity
= R/T uplink
= OTM Prime/ Backup
= Targeted flyby
= Non-targeted flyby
= Periapsis
Close cover
Open cover
R/SRU = Rolling/SRU
= Non-rolling
= No CIRS DSCAL
Dust = Dust Hazard
= Apoapsis
= OPNAV
= HGA to RAM
= RPWS Whistler
= Live IVP Update

RWA Bias Optimization Tool (RBOT)

- A GSW tool named RBOT was created to determine an optimal set of wheel bias rates that minimized a cost index. The cost index captures the following:
  - Wheel rates must not exceed a specified peak rate
  - Time spent in the ±300 rpm region must be minimized
  - RWA revolution must be minimized
  - Costs associated with the low-rpm time and the revolution are "combined" using the consumable specifications

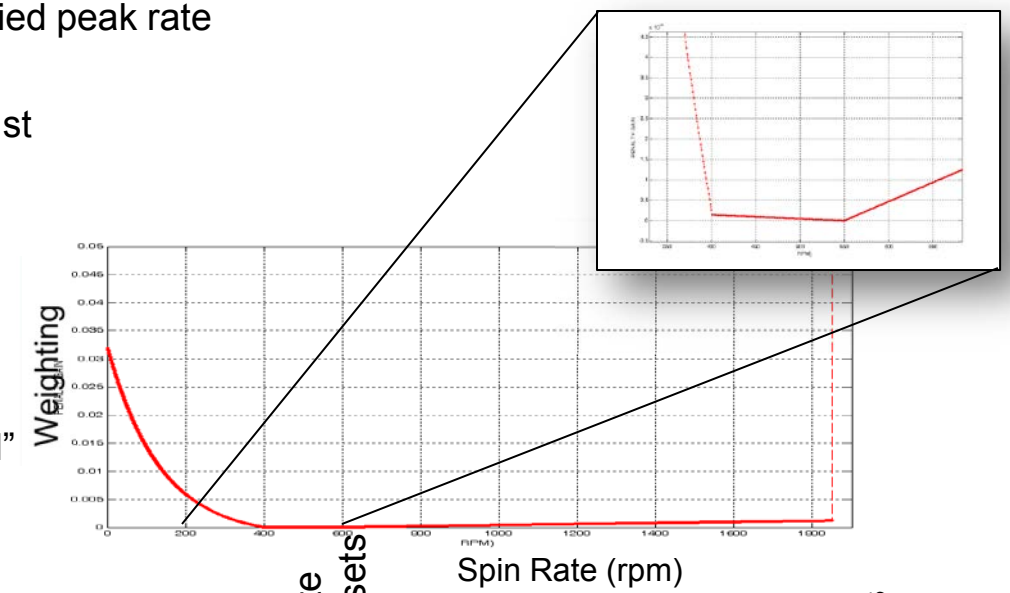

Environmental torque
Science slew profiles
RWA properties
S/C mass properties
Time to next unloading
Etc.

Nelder-Mead Simplex method is used to solve a constraint optimization problem

Candidate RWA Bias sets

AACS and other Reviews: Engineering judgments

Selected RWA Bias

Altering Science as Part of the RBOT Design Process

- The combination of multiple pointing directions along with each RWA's momentum limit results in a major challenge for RBOT in reducing low rpm dwell time
- Up to the AACS uplink engineer to find troubled low rpm regions and change science pointing in order to push the affected RWA through the low rpm region or out of the low rpm region completely
  - If any RWA's speed is within the ±300 rpm region for more than 30 minutes or within the ±100 rpm region for more than 20 minutes an effort is taken by the AACS team and the affected science team to come up with a solution
- Many solutions have been devised to solve these low rpm dwell time problems:
  - Adding momentum biases
    - Easiest and most readily used way to correct a reaction wheel from lingering too long within the low rpm region
    - Placing a bias in the sequence takes time (usually around 30 minutes or more) and this can interfere with science
    - Addition of a bias uses more monopropellant (hydrazine) which is limited and will affect the duration of the spacecraft's mission

Altering Science as Part of the RBOT Design Process(Continued)

- Offsetting the science instrument's secondary axis
  - Second most readily used method for correcting low rpm regions
  - During sequence development, science instruments determine their boresight pointing attitude as well as a secondary attitude
  - A simple rotation about the boresight usually can bring the problematic reaction wheel or wheels out of the low rpm region

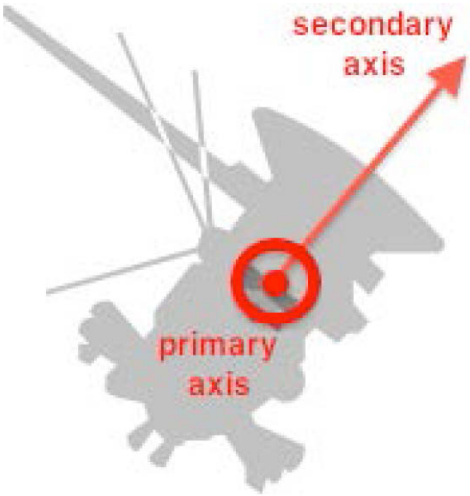

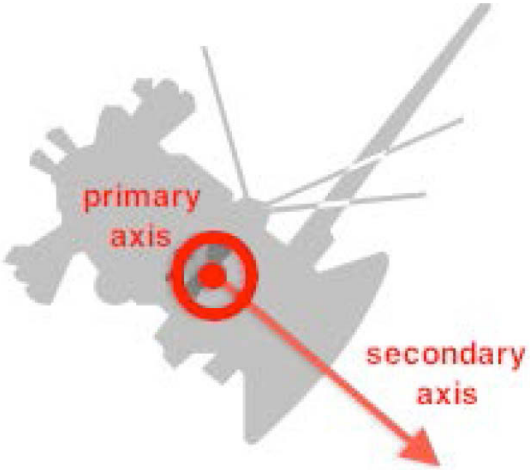

Altering Science as Part of the RBOT Design Process(Continued)

Before

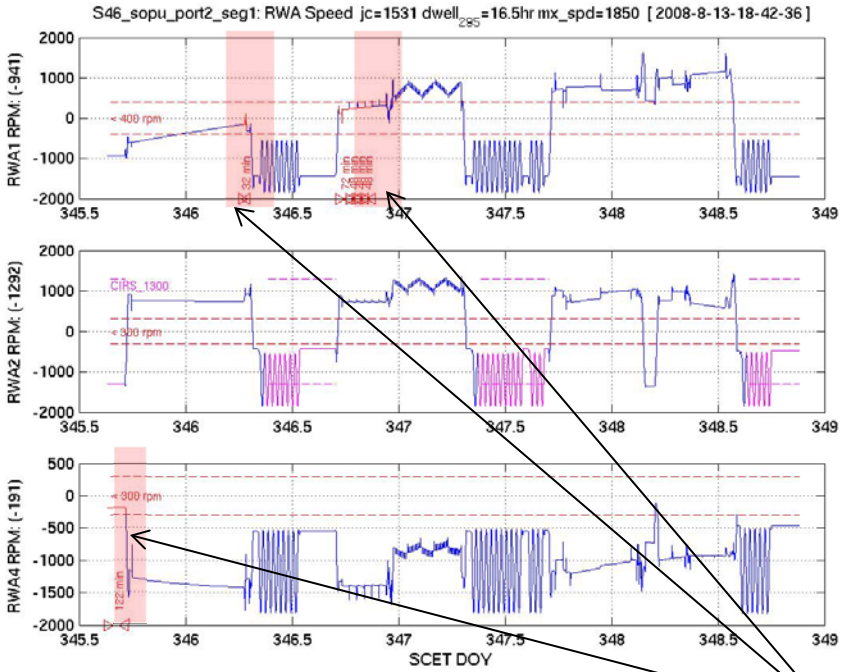

After

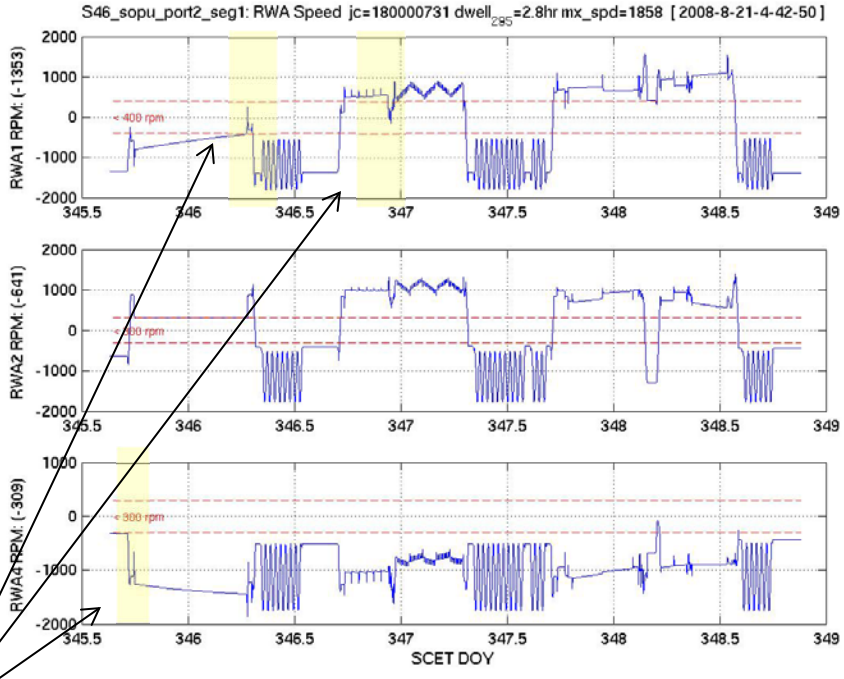

Adding Offsets

Altering Science as Part of the RBOT Design Process(Continued)

- Eliminating downlink rolls or reversing the downlink rolls
  - About 9 hours out of each day Cassini spends downloading data back to Earth via its 4-meter High Gain Antenna
  - Often times this downlink activity actually involves rolling the spacecraft about the radio frequency boresight allowing Cassini to collect magnetic field science data simultaneously
  - These rolls take the spacecraft through a large angle turn causing more momentum space to be used sometimes resulting in more problematic RWA segments
  - By eliminating the rolls or even reversing the rolls direction a clearer segment can result

Before

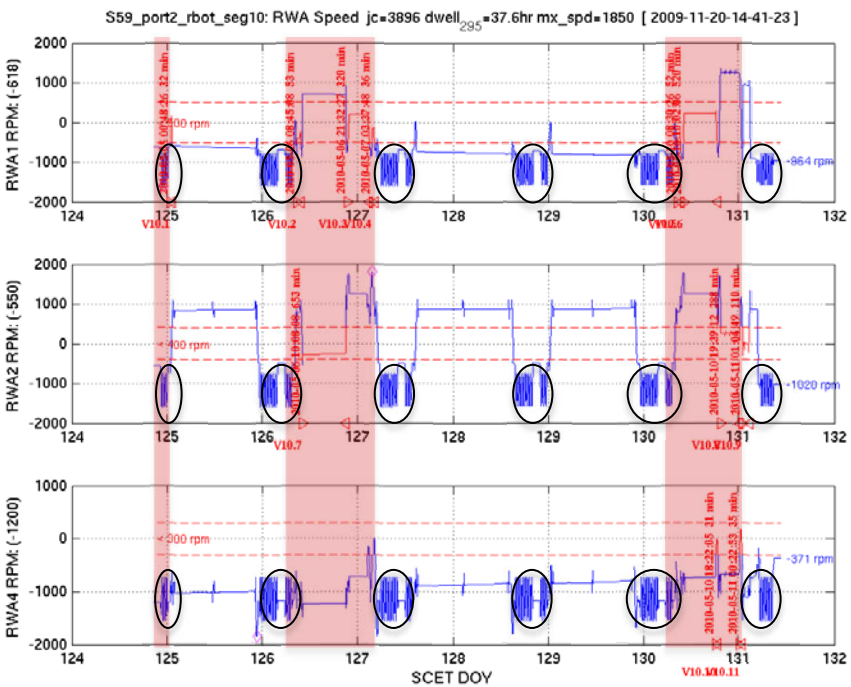

After

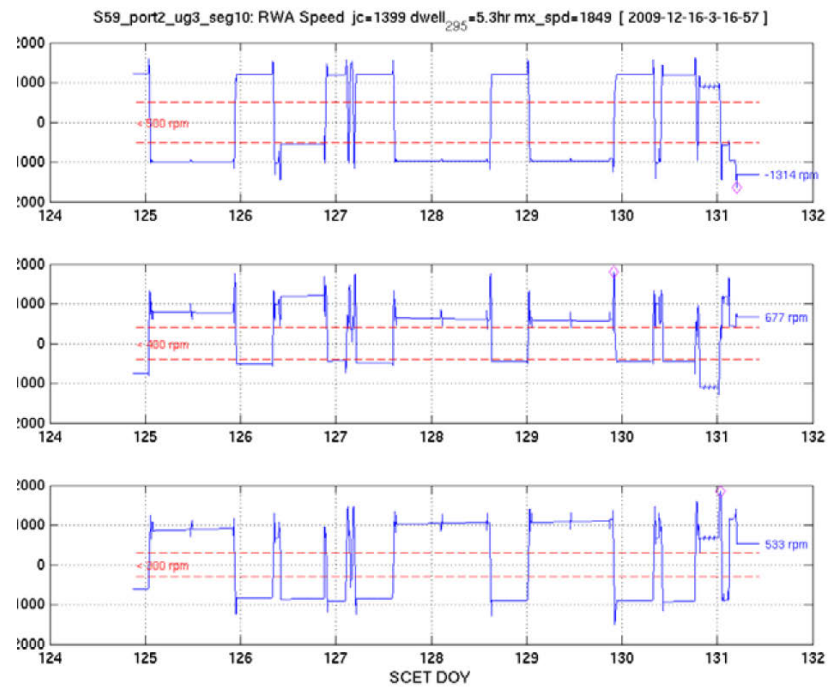

Altering Science as Part of the RBOT Design Process(Continued)

- Decreasing the velocity rates of some slews while simultaneously increasing the slew acceleration limits
  - Least used method for correcting low rpm regions
  - By reducing the spacecraft velocity, a trade off is made between the spacecraft's momentum and the reaction wheels' momentum which can reduce the high RWA speeds
  - After reducing the high RWA speeds, RBOT can be rerun in order to reoptimize because more momentum space has been freed up

Constraints Levied on Science

1. "RBOT-friendly" secondaries shall be used unless science provides justification for why they cannot be used
2. No "AZSCANS" shall be included in any sequence
3. When tracking a body for more than 60 degrees an observation must either be
   a. Less than 3 hours in duration, or
   b. Broken into segments of three hours or less with an inertially fixed quiescent break(~20 minutes at an inertial attitude) between segments
4. The combination of multiple science activities is restricted during apoapsis segments such that no more than two of the following three items shall be included in any one apoapsis period (outside 20 Rs)
   a. Downlink rolls
   b. Magnetometer (MAG) calibration/Cassini Plasma Spectrometer (CAPS) rolls
   c. Pointing changes for other science activities that share common pointing
5. All turns greater than 60 degrees shall use slower body rates

RBOT Constraint #1: RBOT-Friendly Secondaries

- Intended to limit the total angular motion of the spacecraft
- Ground Software Tool called RBOT_MY_SPASS was created to find RBOT friendly secondaries
  - Defines the spacecraft's velocity vector and the prime pointing vector at various times
  - Cross product of R and V provides decent first guess
  - Multiple iterations of the secondary axis render a new secondary that is closest to near-zero motion

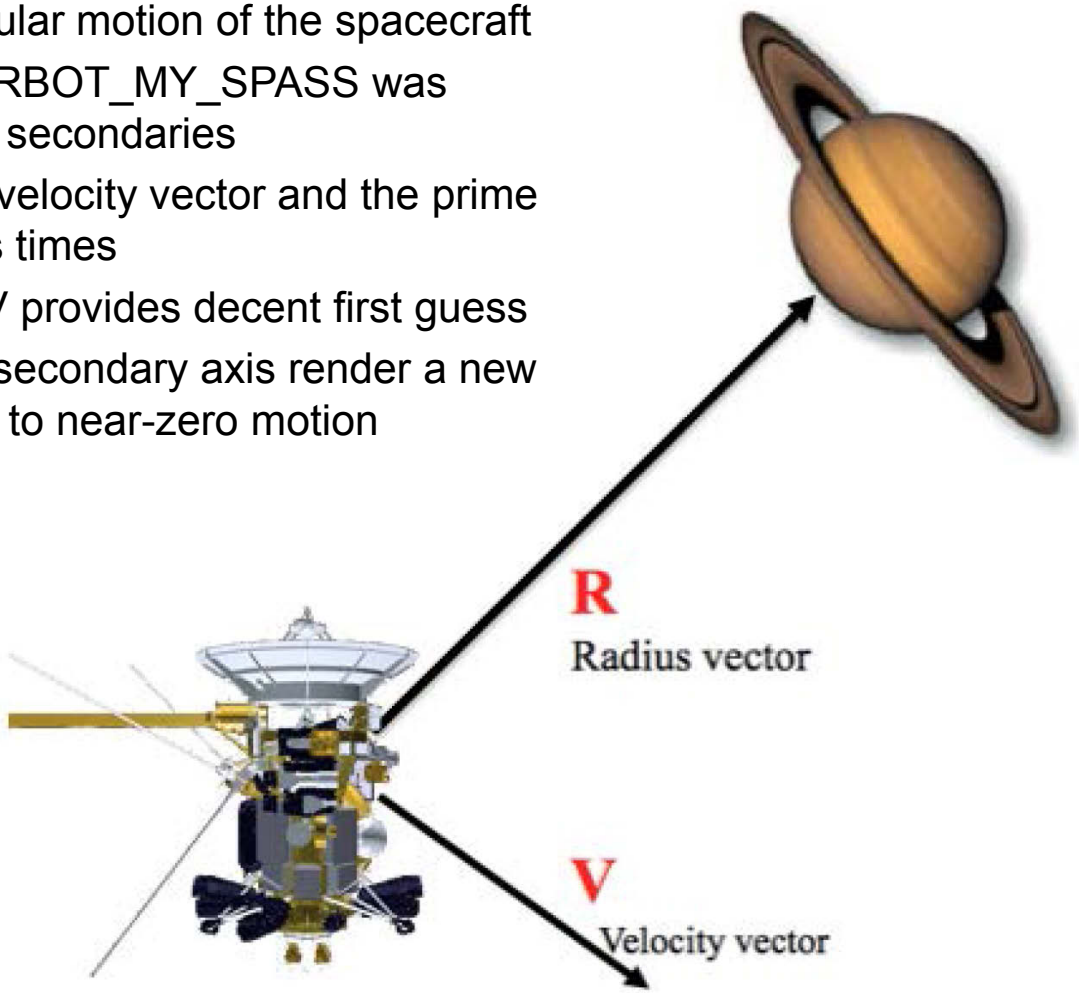

Momentum Space

Example: RWA momentum profiles

RWA momentum storage capability at 2020 RPM
Desired RWA spin range: 300-1850 RPM
C-33 Cruise sequence S/C momentum trajectory

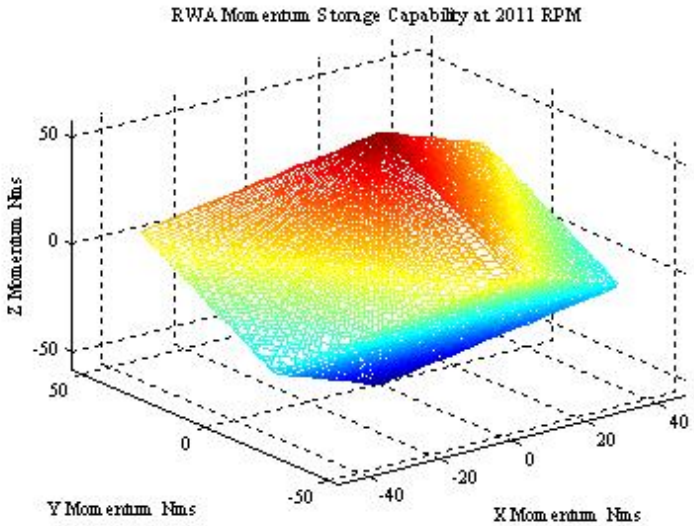

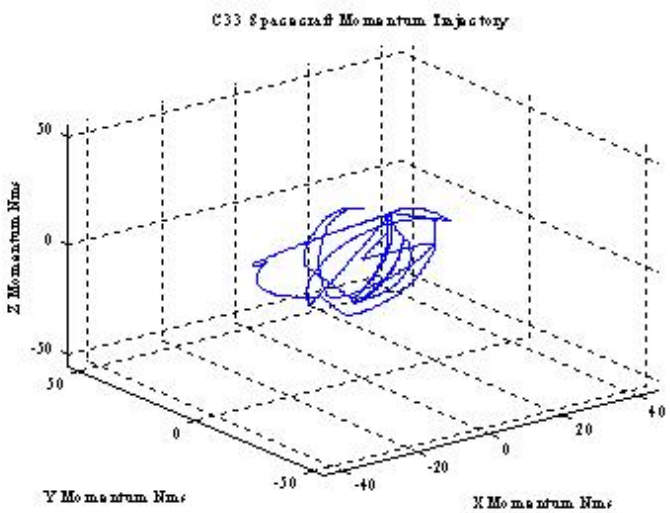

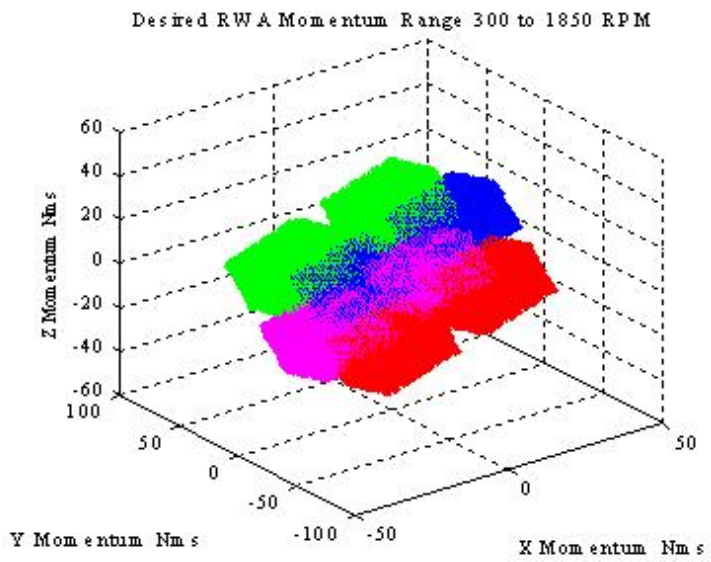

Constraints Levied on Science

2. No AZSCANS
   a. Azimuth Scan – used by the ISS instrument
   b. Objective of observation was to follow a portion of Saturn's Ring at a designated radius from Saturn
   c. Find tiny moonlets inside the Cronian ring system
   d. Repeat offender in causing RBOT problems
   e. Science teams redesigned the observation to only view a perpendicular cross section of the rings instead

3. Split Up Long Slow Slews
   a. Observations that tracked a body for more than 3 hours and caused the spacecraft to slew greater than 60 degrees
   b. Caused the spacecraft to move slowly while also changing the attitude substantially
   c. Constraint forced the science pointing designers to break up these types of observations into 3 hour or less segments with a 20 minute quiescent break in between segments

Constraints Levied on Science

4. 2 Out of 3 Rule
   a. Workforce shrank due to reduction in funding during XXM resulting in the need to reduce work load
   b. Higher priority science is usually taken around periapsis so this constraint as intended only outside of 20 Rs
   c. 3 types of science
      a. Downlink rolls
      b. MAG calibration and CAPS rolls
      c. Optical Remote Sensing (ORS)

5. Slow Body Rates For Long Slews
   a. Long slews with large spacecraft body rates can be problematic for RBOT because so much of the momentum space is used for such an activity
   b. Limited any single commanded turn in RWA control where the total turn magnitude was greater than 60 degrees to lower spacecraft body rates
   c. This constraint was deemed important enough to be implemented into the spacecraft flight rules to insure that other ground software tools would alert AACS to any violations

Guidelines Levied on Science

RBOT guidelines were created to help the science teams understand what types of rules would work towards reducing the overall momentum space and therefore help reduce RBOT problem areas:

1. Avoid turning the spacecraft unless necessary for accomplishing science
2. Slow down slews
3. Avoid very long slews (> 100 degrees)
4. Be wary of long observations that cover huge swaths of sky
5. Be wary of single observations that point the spacecraft to a unique target
6. Use the same initial secondary for all downlinks within an RBOT segment
7. Put similar science together
8. Exploit the natural motion of the spacecraft body when deciding how to point the spacecraft
9. Do not use a large mosaic (scanning observation) if a small mosaic or a point and stare will suffice

Conclusion
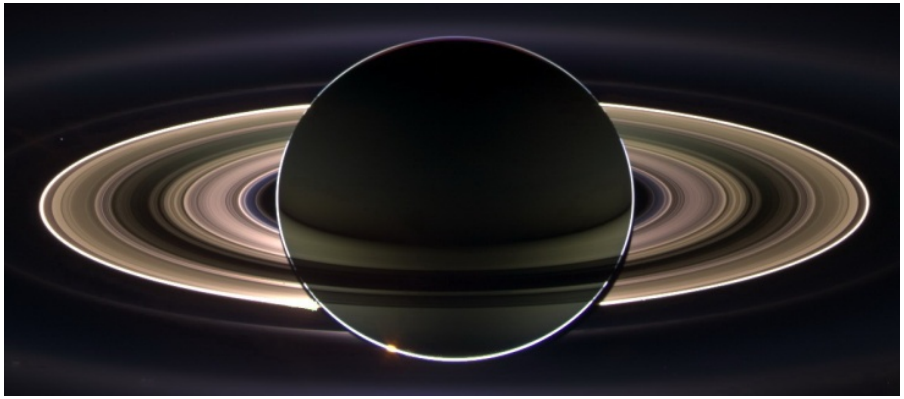
- Cassini has been in space for close to 14 years and looking toward 6+ more years
- Cassini spacecraft is commanded to use RWA control about 99% of the time, with about 1% of the time requiring reaction control system (RCS)
- Such extensive use of the RWA hardware throughout the mission requires the RWAs be operated in a way that minimizes degradation in the RWA electronics
- RWA consumables
  - Total number of revolutions
  - Time spent at in low rpm
  - Total number of on/off cycles
- RBOT is used to manage individual RWA momentum and bias the RWAs in a way that reduces both the total number of revolutions as well as time spent below EHD
- Additionally altering the planned pointing of the spacecraft is needed so that RWA low rpm time is conserved
- Guidelines and constraints levied on science can help ease the complications between science pointing designers and AACS analysts