Digitally Calibrated TR Modules Enabling Real-time Beamforming SweepSAR Architectures for DESDynI-class Radar Instruments

James Patrick Hoffman, Eva Peral, Louise Veilluex, Dragana Perkovic, Scott Shaffer

Jet Propulsion Laboratory, California Institute of Technology
4800 Oak Grove Drive
Pasadena, CA 91109, USA
Email: james.p.hoffman@jpl.nasa.gov

ABSTRACT

Real-time digital beamforming, combined with lightweight, large aperture reflectors, enable SweepSAR architectures such as that of the proposed DESDynI [*Deformation, Ecosystem Structure, and Dynamics of Ice*] SAR [*Synthetic Aperture Radar*] Instrument (or DSI). SweepSAR promises significant increases in instrument capability for solid earth and biomass remote sensing, while reducing mission mass and cost. This new instrument concept requires new methods for calibrating the multiple channels, which must be combined on-board, in real-time. We are developing new methods for digitally calibrating digital beamforming arrays to reduce development time, risk and cost of precision calibrated TR modules for array architectures by accurately tracking modules' characteristics through closed-loop Digital Calibration, thus tracking systematic changes regardless of temperature.

INTRODUCTION

New radar systems, such as DSI (the proposed DESDynI SAR instrument) [1], that employ on-board processing to enable real-time Digital BeamForming (DBF), require precise calibration in order to realize the performance improvements promised by this novel architecture.

Real-time digital beamforming, combined with lightweight, large aperture reflectors, enable SweepSAR architectures, which promise significant increases in instrument capability for solid earth and biomass remote sensing. These new instrument concepts require new methods for calibrating the multiple channels, which are combined on-board, in real-time. The calibration of current state-of-the-art Electronically Steered Arrays typically involves pre-flight TR (Transmit/Receive) module characterization over temperature, and in-flight correction based on temperature, which ignores the effects of element aging and drifts unrelated to temperature. We are developing new methods for digitally calibrating digital beamforming arrays to reduce development time, risk and cost of precision calibrated TR modules for array architectures by accurately tracking modules' characteristics through closed-loop Digital Calibration, thus tracking systematic changes regardless of temperature. The benefit of this effort is that it would enable a new class of lightweight radar architecture, Digital Beamforming with SweepSAR, providing significantly larger swath coverage than conventional SAR architectures for reduced mass and cost.

The SweepSAR architecture is being developed for the proposed DESDynI (Deformation, Ecosystem Structure, and Dynamics of Ice) radar, a mission recommended by the National Research Council as a Tier 1 Earth Science mission. Our technology allows real-time tracking of phase and amplitude of the projected DESDynI TR modules' receiver and transmitter chains, with significant improvements in accuracy for phase and amplitude. Corrections would be made to on receive, by adjusting beamforming coefficients, and to on transmit using a phase-shifter. By injecting signals of known amplitude, phase and frequency, at different points of the RF circuit, then digitizing and processing the signals in real-time, we would be able to track changes in the system characteristics and modify the beamforming coefficients enabling us to correct for changes in the system's response

SWEEPSAR: BENEFITS AND CHALLENGES

The SweepSAR architecture requires three significant technologies that are not typically used in traditional radar instruments. The first is an electrically large reflector, independent digitization of each receiver channel—no analog combining, and precision, real-time calibration of each TR module's transmit and receive channels.

© 2011 California Institute of Technology.

A key requirement of SweepSAR is the ability to illuminate a single broad swath, while also being able to receive independently on multiple, narrow-swath channels, as shown in Figure 1.

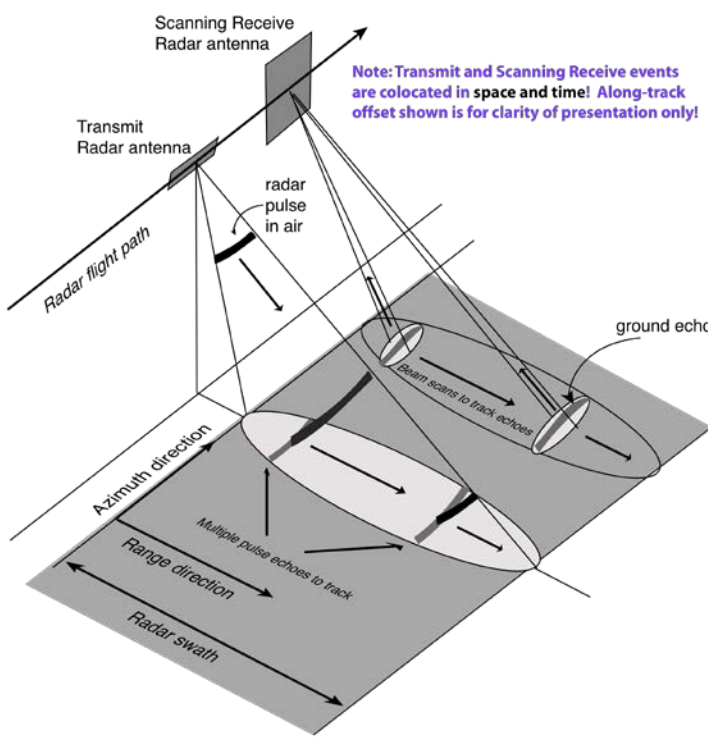

Figure 1 SweepSAR Transmit and Receive Swaths. Transmit requires illumination of a large swath (small aperture), while Receive requires multiple small swaths (large apertures).

To accomplish this, the large reflector, as seen in Figure 2, is under-illuminated by transmitting on every transmitter element in-phase. The effective aperture is small, yielding a very wide illumination on the ground. During transmit, each receiver element is independent, and takes advantage of the entire reflector, yielding high gain and several independent, higher resolution swaths.

The benefits of SweepSAR over more traditional techniques are the increased swath over stripmapping, this reduces repeat pass times to improve temporal sampling, and an increase in the number of azimuth looks over ScanSAR, which is required to meet radiometric accuracies for the Ecosystem science. A more in-depth discussion on SweepSAR can be found in [2]. The SweepSAR implementation of proposed for DESDynI, as opposed to a traditional phased-array is also estimated to reduce mass by 70% and costs by 50% [3,4]. These advantages are due to the low areal mass density (on the order of 4.4 kg/m2) [5].

SweepSAR Challenges

The significant advantages of the SweepSAR architecture can only be realized if the N-channels can be matched appropriately for gain and phase. High level science requirements (e.g. displacement and biomass error) can be flown down to lower level requirements on the allowable degradation on MNR (multiplicative noise ratio), impulse response, SNR and phase uncertainty due to calibration errors.

If the transmit modules are not matched in gain and phase, then there is degradation on the RASR (range ambiguity to signal ratio), AASR (azimuth ambiguity to signal ratio) and phase uncertainty. Since the received modules are not on simultaneously, mismatches in the receiver modules lead to time distortion of the pulse, and degradation on the impulse response, This distortion leads to degradation on ISLR (integrated side lobe ratio), PSLR (peak side lobe ratio) and impulse response width.

The RASR, AASR, gain and impulse response degradation lead to a control requirement on phase and amplitude, whereas the phase uncertainty imposes tight requirements on phase and amplitude knowledge.

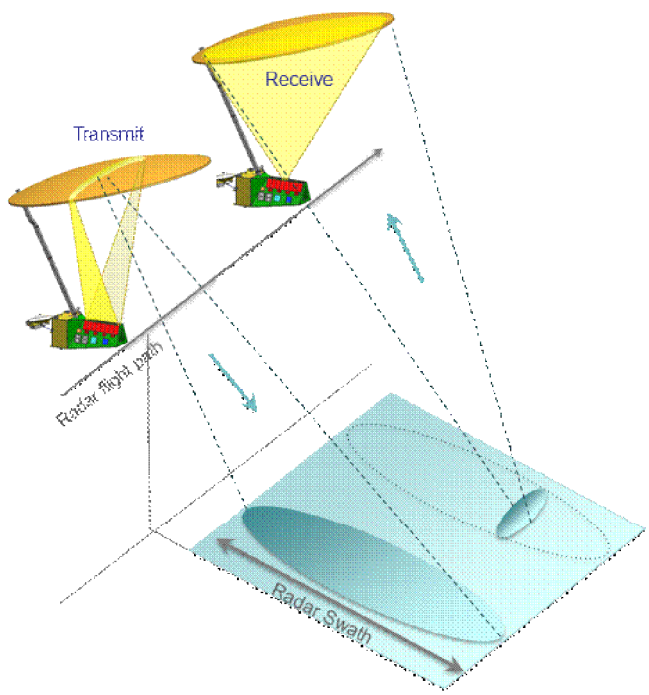

Figure 2 Implementation of SweepSAR with an electrically large reflector.

© 2011 California Institute of Technology.

DIGITAL CALIBRATION

The conceptual block diagram in Figure 3 shows the integrated digital calibration and beamforming hardware architecture. For digital beamforming, each analog channel is independently digitized and combined digitally. Among its advantages over traditional analog combining, digital beamforming allows modification (weighting) of each channel's amplitude and phase. These channels may then be combined as desired. For DBF, each final Receive channel will be a digitally weighted combination comprised of multiple analog (digitized) channels, so each final channel benefits from information from its nearest neighbors. In addition, the weighting may be altered in near real-time to compensate for changes in system response. This allows for an unprecedented level of control that improves calibration over current capabilities, which enables the precision required for employing SweepSAR for geophysical remote sensing. By taking advantage of the beamforming architecture's independent processor on each channel, digital calibration may be performed with precision that exceeds standard analog techniques by an order of magnitude or more, as shown in Table 1 [6] [7].

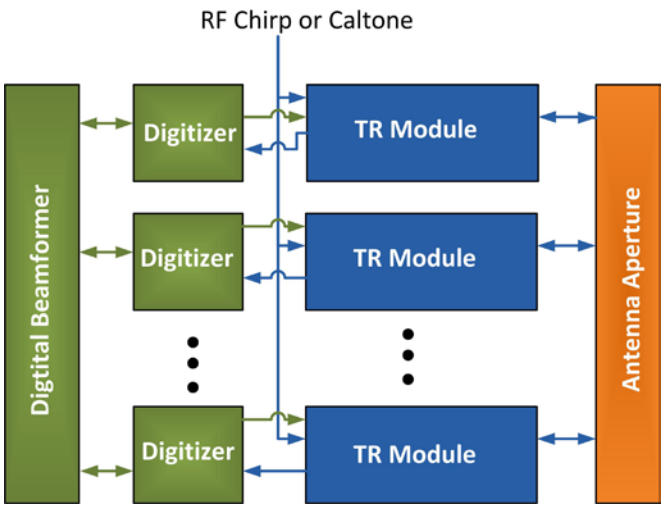

Figure 3 Simplified block diagram of the DBF architecture. Received signals are directly digitized, digitally filtered, and then corrected, based upon the measured calibration signals, before being digitally combined.

TR Module Calibration Architecture

To fully calibrate the analog portion of the TR module, as well as digitally align the DBF's digitizers, several calibration paths must be considered; these include the Transmit Calibration, Receive Calibration and Bypass/Timing Calibration paths, see Figure 4. By routing signals through each of these paths and digitizing the results, each channel's processor may calculate the independent contributions of each path in order to estimate each channel's characteristic performance. Any deviation in gain and phase from the baseline characteristics of the transmit and receive paths introduces errors in radar image. Careful examination of the circuit in Figure 4 reveals that the only active electronics that are not able to be calibrated are the calibration switches themselves. Stability and knowledge of these components is critical to accurate calibration estimates, therefore, this is designed and packaged to constrain the thermal variability [8], and its temperature is monitored by the instrument.

© 2011 California Institute of Technology.

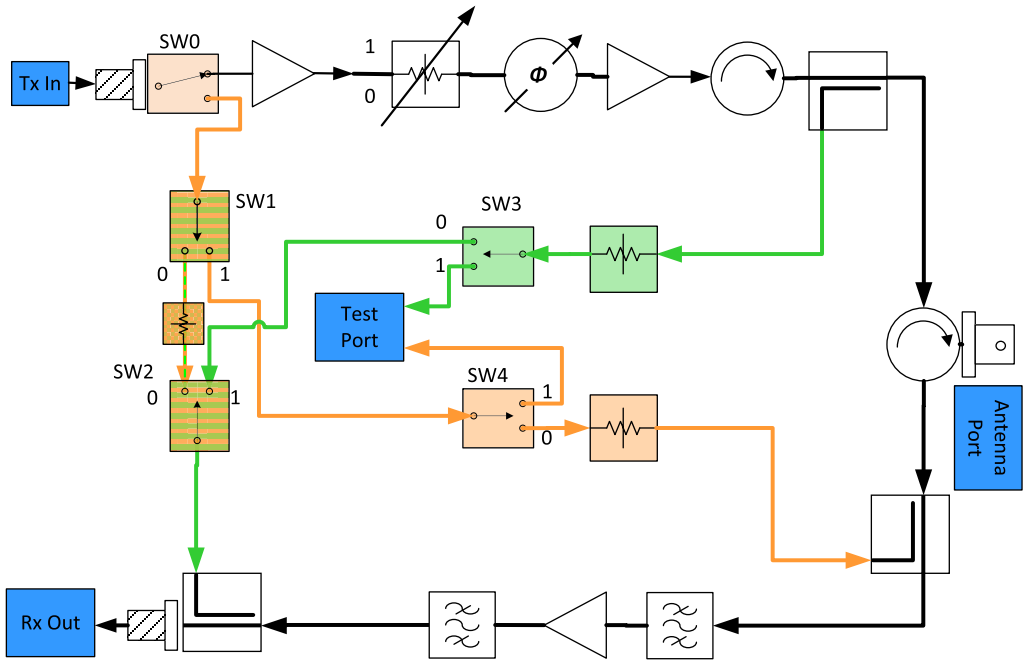

Figure 4 TR Module calibration paths. The Receiver Calibration path is shown in orange (switches SW0/SW1/SW4), Transmit Cal in green (switches SW3/SW2), and Bypass/Timing Cal Path in dashed green/orange (SW0/SW1/SW2).

FSP (First Stage Processor) Calibration Architecture

A First Stage Processor (FSP), which consists primarily of the Analog-to-Digital Converter (or Digitizer) and an on-board processor, is connected to each TR, as shown in Figure 3. Each FSP estimates the deviation from baseline of each calibration path for its TR module, and applies appropriate corrective actions.

For each TR's transmit chain, the corrective actions include commanding a change in the TR module's analog phase shifter, which has limited precision, but is capable of lining-up the phase fronts of each independent transmitter to form a single, coherent transmit beam. The residual phase deviation, which is required for any additional ground processing, is conveyed to the ground by embedding the estimates of the deviations into the data stream. To maximize power efficiency, which is a key parameter for DSI, the transmitters of each TR module are run at maximum saturated power, so there is no control of the TR's transmitter power. However, each transmitter must be held in saturation, so the transmitter attenuator may adjust the drive level, and knowledge of each channel's power must be estimated and included in the data stream.

For the Receive portion, the corrective action is applied to the gain and phase of each channel in the digital domain through changing the weightings in the beamformer algorithm. One may note that in Table 1, the calibration control is less precise than calibration knowledge for the transmitter, but knowledge and control are the same for the receiver. This is due to the transmitters' control being achieved through analog components, while the receivers' control are implemented within the digital beamformer.

© 2011 California Institute of Technology.

For the Bypass/Timing portion, the transmit and receive chains are bypassed, which allows the group delay of each channel of the feed network that provides the transmit signal to each TR module, plus the digitizer timing skew to be estimated. Once this is estimated, the digitizer sampling may be adjusted to line the digitizers up in time.

Calibration Algorithms

In order to levy requirements on the calibration, we must first quantify the errors than can be tolerated while successf ully fulfilling science goals. The projected DESDynI instrument error budget key and driving mission requirements wer e presented at the Mission Concept Review in January 2011 [4]. The overall system error allocation is less than 0.1 dB e rror for the power estimate and less than 1.5 degree for the phase estimate after calibration. This system error budget is split between components inside and outside the cal-loop, and the residual error for the accuracy of the cal-loop is 0.01 dB and 0.06 degrees **knowledge** for amplitude and phase respectively.

Once the TR's calibration signal, either transmit chirp or receive caltone, has been digitized, it must be processed to determine its amplitude and phase. The accuracy of this estimate represents the knowledge with which we can character ize the system response. The algorithms are described below.

Receive Calibration Algorithm

After the data has been digitized, it is split and routed through two paths, one processing the chirp and the other proc essing the caltone through the blue components shown in Figure 5. The caltone is filtered and shifted to baseband. The outputs of this operation are samples of the baseband chirp In-phase (I) and Quadrature (Q), which are then averaged to produce a single value to be applied to the DBF coefficients that are pre-loaded in the FSP. The coefficients are applied to the data, correcting the receiver. The estimated coefficients are also passed to the ground so that they can be used in p ost-processing. The same algorithm will be used for bypass calibration to estimate timing skew between the multiple di gitizer channels.

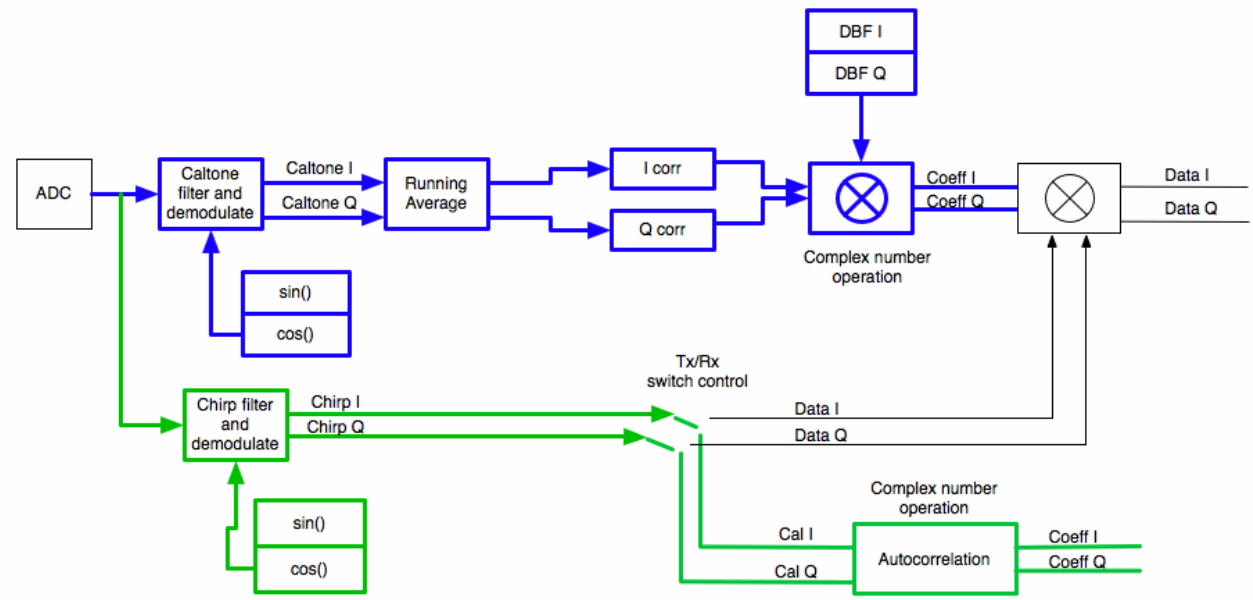

Figure 5 Preliminary receiver (blue) and transmitter (green) calibration algorithm implementation.

Preliminary results, shown in Figure 6, were produced by simulating the hardware implementation of the receiver cal ibration. Results show that if the caltone signal is 12 dB below the science signal, the phase uncertainty is 0.3 degrees, a nd amplitude uncertainty is approx. 0.01 dB, using a 400 microsecond caltone waveform. With these estimates, we meet the amplitude uncertainty but not the phase uncertainty. However, by averaging approximately 25 estimates, we can inc rease the accuracy of the phase estimate to the required 0.06 degrees.

© 2011 California Institute of Technology.

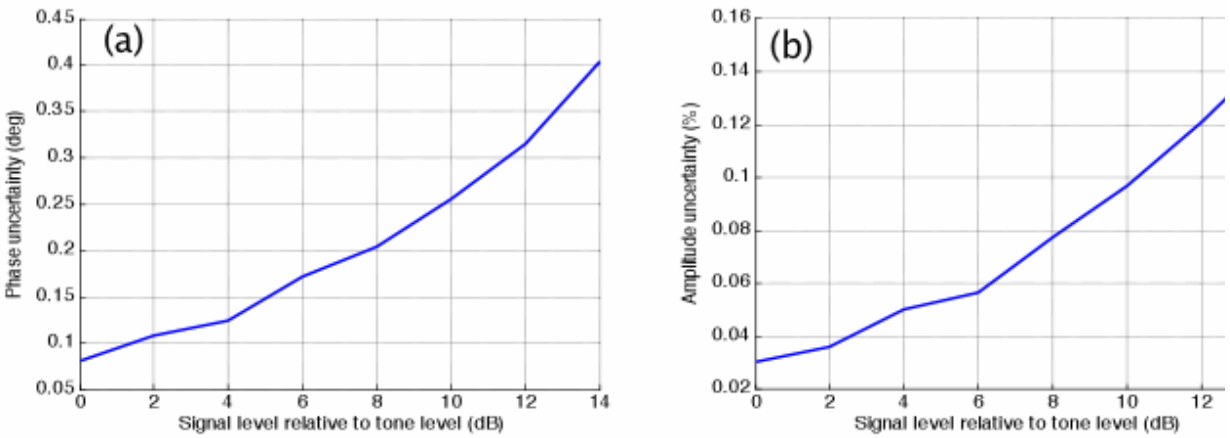

Figure 6 (a) Phase uncertainty vs. signal to caltone, (b) Amplitude uncertainty vs. signal to caltone, for 400 us duration of the tone.

Transmit Calibration Algorithm

The transmit chirp is coupled at the output of high power amplifier, as shown in Figure 3, attenuated and injected int o the ADC where it is digitized, and processed digitally as shown in green in Figure 5.

The chirp is filtered and shifted to baseband, after which it is passed to the autocorrelation block that performs com plex multiplication with the signal's conjugate (waveform preloaded in memory) and summed over all samples, corresp onding to the autocorrelation at one point in time. The results are I and Q values from which we can estimate phase and amplitude. These values are routed to the SSP where they are packed together with science data and analyzed in post-pr ocessing. The initial simulations shown plotted in Figure 7 indicate that we can meet requirements using the outlined ca librations algorithm as long as we can achieve an SNR of 15 dB or higher and aggregate a small number of pulses toget her—approximately 25.

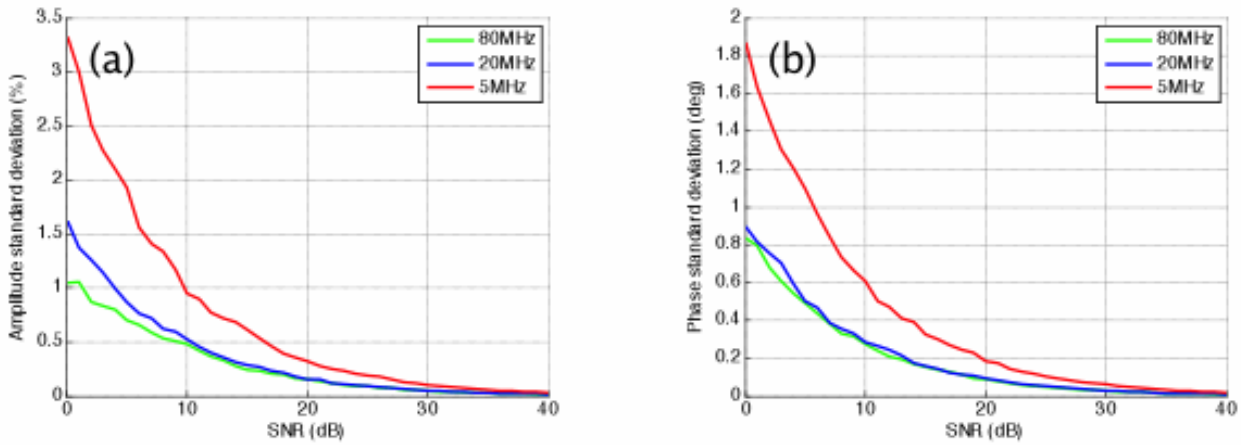

Figure 7 (a) Amplitude standard deviation vs. SNR, (b) Phase standard deviation vs. SNR, for three different bandwidths, using 20 us pulse width.

The transmit portion of the T/R module includes a phase shifter with resolution of 3 degrees that can be controlled th rough the FSP. When the new value has drifted more than 3 degrees from the baseline value, the FSP will command the phase shifter to change its value, keeping the transmit beams aligned.

© 2011 California Institute of Technology.

SUMMARY

The digital calibration techniques described in this paper, will improve TR module calibration precision and accurac y compared to the prior state-of-the-art by more than an order of magnitude in key performance parameters. Digital cali bration allows for an unprecedented level of calibration parameter knowledge. When coupled with a DBF, this allows f or an equally impressive level of control, reducing receiver calibration errors from 1 dB to 0.01 dB in amplitude and 10 degrees to 0.06 in phase. The same level of knowledge is achieved for the transmitter, but the control is coarser due to li mitations in the analog control circuitry. These levels of correction and knowledge expected through digital calibration meet the baseline requirements for implementation of SweepSAR technique in the proposed DESDynI radar instrument [4]. The proposed DESDynI SweepSAR requirements are not, and could not be met with traditional calibration techniqu es, such as those employed on UAVSAR [6].

The long-term stability of calibration control and knowledge would be improved using Digital Calibration, as comp ared to standard techniques. Digital Calibration actively tracks real-time performance, rather than relying upon pre-laun ch thermal characterization and temperature-based corrections, which is how traditional TR module calibration is perfor med. Since our closed-loop digital calibration does not depend solely upon a priori knowledge of modules' performance , it is also able to track any changes that might occur independently of temperature, such as aging and radiation effects. This also has the potential to shorten the pre-launch testing time significantly, since the real-time digital calibration does not require extensive characterization.

As previously discussed, the Digital Calibration technique would enable the proposed DESDynI mission to implement a precision DBF, required to utilize the SweepSAR architecture, which would reduce instrument cost by as much as 50% and mass by as much as 70% [3].

ACKNOWLEDGMENTS

This work is supported by the proposed DESDynI Project, and was carried out at the Jet Propulsion Laboratory, California Institute of Technology, under a contract with the National Aeronautics and Space Administration

REFERENCES

[1] "Earth Science and Applications from Space: National Imperatives for the Next Decade and Beyond", National Research Council of the National Academies, The National Academies Press, 2007.

[2] Freeman, A., Krieger, G., Rosen, P., Younis, M., Johnson, W., Huber, S., Jordan, R., Moreira, A.,"SweepSAR: Beam-forming on receive using a reflector-phased array feed combination for spaceborne SAR," *Radar Conference, 2009 IEEE*, vol., no., pp.1-9, 4-8 May 2009, doi: 10.1109/RADAR.2009.4977140

[3] Ksiensky, D., et al., "DESDynI Payload Electronics Risk Assessment and Spacecraft Concept Comparison," Final report by Aerospace Corporation for JPL subcontract #1405623, December 7, 2010.

[4] NASA Mission Concept Review: "Deformation, Ecosystem Structure, and Dynamics of Ice – DESDynI", JPL, Pasadena, January 2011, for material contact Howard Eisen, Howard.J.Eisen@jpl.nasa.gov

[5] Chamberlain, N.; Ghaemi, H.; Giersch, L.; Harcke, L.; Hodges, R.; Hoffman, J.; Johnson, W.; Jordan, R.; Khayatian, B.; Rosen, P.; Sadowy, G.; Shaffer, S.; Shen, Y.; Veilleux, L.; Wu, P.; , "The DESDynI synthetic aperture radar array-fed reflector antenna," *Phased Array Systems and Technology (ARRAY), 2010 IEEE International Symposium on* , vol., no., pp.381-386, 12-15 Oct. 2010

[6] Critical Design Review: "UAVSAR", JPL, Pasadena, November 2005, for material contact Cathleen Jones, Cathleen.E.Jones@jpl.nasa.gov

[7] Chamberlain, N., Sadowy, G., "The UAVSAR Transmit / Receive Module," Aerospace Conference, 2008 IEEE , vol., no., pp.1-15, March 2008

[8] Hoffman, James; Del Castillo, Linda; Jenabi, Masud; Miller, Jennifer; Birur, Gajanana; , "Advanced thermal packaging for high power TR modules," *Radar Conference (RADAR), 2011 IEEE* , vol., no., pp.985-988, 23-27 May 2011

© 2011 California Institute of Technology.