Digital Calibration of TR Modules for Real-time Digital Beamforming SweepSAR Architectures

James Patrick Hoffman, Dragana Perkovic, Scott Shaffer, Louise Veilleux, Eva Peral

Jet Propulsion Laboratory, California Institute of Technology
4800 Oak Grove Drive
Pasadena, CA 91109, USA
Email: james.p.hoffman@jpl.nasa.gov

ABSTRACT

Real-time digital beamforming, combined with lightweight, large aperture reflectors, enable SweepSAR architectures such as that of the proposed DESDynI [*Deformation, Ecosystem Structure, and Dynamics of Ice*] SAR [*Synthetic Aperture Radar*] Instrument (or DSI). These new instrument concepts require new methods for calibrating the multiple channels, which must be combined on-board, in real-time. The calibration of current state-of-the-art Electronically Steered Arrays typically involves pre-flight TR (Transmit/Receive) module characterization over temperature, and in-flight correction based on temperature, which ignores the effects of element aging and drifts unrelated to temperature. We are developing new methods for digitally calibrating digital beamforming arrays to reduce development time, risk and cost of precision calibrated TR modules for array architectures by accurately tracking modules' characteristics through closed-loop Digital Calibration, thus tracking systematic changes regardless of temperature. The benefit of this effort is that it would enable a new class of lightweight radar architecture, Digital Beamforming with SweepSAR, providing significantly larger swath coverage than conventional SAR architectures for solid earth and biomass remote sensing, while reducing mission mass and cost. This new instrument concept requires new methods for calibrating the multiple channels, which must be combined on-board, in real-time.

INTRODUCTION

New radar systems, such as DSI (the proposed DESDynI SAR instrument) [1], that employ on-board processing to enable real-time Digital BeamForming (DBF), require precise calibration in order to realize the performance improvements promised by this novel architecture.

Real-time digital beamforming, combined with lightweight, large aperture reflectors, enable SweepSAR architectures, which promise significant increases in instrument capability for solid earth and biomass remote sensing. These new instrument concepts require new methods for calibrating the multiple channels, which are combined on-board, in real-time. The calibration of current state-of-the-art Electronically Steered Arrays typically involves pre-flight TR (Transmit/Receive) module characterization over temperature, and in-flight correction based on temperature, which ignores the effects of element aging and drifts unrelated to temperature. We are developing new methods for digitally calibrating digital beamforming arrays to reduce development time, risk and cost of precision calibrated TR modules for array architectures by accurately tracking modules' characteristics through closed-loop Digital Calibration, thus tracking systematic changes regardless of temperature. The benefit of this effort is that it would enable a new class of lightweight radar architecture, Digital Beamforming with SweepSAR, providing significantly larger swath coverage than conventional SAR architectures for reduced mass and cost.

The SweepSAR architecture is being developed for the proposed DESDynI (Deformation, Ecosystem Structure, and Dynamics of Ice) radar, a mission recommended by the National Research Council as a Tier 1 Earth Science mission. Our technology allows real-time tracking of phase and amplitude of the projected DESDynI TR modules' receiver and transmitter chains, with significant improvements in accuracy for phase and amplitude. Corrections would be made to on receive, by adjusting beamforming coefficients, and to on transmit using a phase-shifter. By injecting signals of known amplitude, phase and frequency, at different points of the RF circuit, then digitizing and processing the signals in real-time, we would be able to track changes in the system characteristics and modify the beamforming coefficients enabling us to correct for changes in the system's response. The benefits of SweepSAR over more traditional techniques are the increased swath over stripmapping. This reduces repeat pass times to improve temporal sampling, and an increase in the number of azimuth looks over ScanSAR, which is required to meet radiometric accuracies for the Ecosystem science. A more in-depth discussion on SweepSAR can be found in [2]. The SweepSAR implementation

© 2011 California Institute of Technology.

proposed for DESDynI, as opposed to a traditional phased-array, is also estimated to reduce mass by 70% and costs by 50% [3,4]. These advantages are due to the low areal mass density (on the order of 4.4 kg/m2) [5].

CALIBRATION NEEDS

The significant advantages of the SweepSAR architecture can only be realized if the N-channels can be matched appropriately for gain and phase. High level science requirements (e.g., displacement and biomass error) can be flown down to lower level requirements on the allowable degradation on MNR (multiplicative noise ratio), impulse response, SNR and phase uncertainty due to calibration errors.

If the transmit modules not matched in gain and phase, then there is degradation on the RASR (range ambiguity to signal ratio), AASR (azimuth ambiguity to signal ratio) and phase uncertainty. Since the received modules are not on simultaneously, mismatches in the receiver modules lead to time distortion of the pulse, and degradation on the impulse response, This distortion leads to degradation on ISLR (integrated side lobe ratio), PSLR (peak side lobe ratio) and impulse response width.

The RASR, AASR, gain and impulse response degradation lead to a control requirement on phase and amplitude, whereas the phase uncertainty imposes tight requirements on phase and amplitude knowledge.

The hardware developed for the beamforming architecture, namely independent digitization and processing of each receiver channel, is exactly what is needed to perform digital calibration. In digital beamforming, each analog channel is independently digitized and combined digitally. Among its advantages over traditional analog combining, digital beamforming allows modification (weighting) of each channel's amplitude and phase. For DBF, each Receive channel is a digitally weighted combination comprised of multiple analog (digitized) channels, so each final channel benefits from the signals received by its nearest neighbors. Since the weighting may be altered in near real-time to compensate for changes in system response, calibration on Receive can be implemented through the beamforming coefficients. This allows for an unprecedented level of control that will improve calibration over current capabilities. This enables the precision required for employing SweepSAR for geophysical remote sensing. By taking advantage of the beamforming architecture's independent processor on each channel, digital calibration may be performed with precision that exceeds standard analog techniques by an order of magnitude or more.

TR MODULE CALIBRATION ARCHITECTURE

To fully calibrate the analog portion of the TR module, as well as digitally align the DBF's digitizers, several calibration paths must be considered; these include the Transmit Calibration, Receive Calibration and Bypass/Timing Calibration paths, see Figure 1. By routing signals through each of these paths and digitizing the results, each channel's processor may calculate the independent contributions of each path in order to estimate each channel's characteristic performance. Careful examination of the circuit in Figure 1 reveals that some components are not able to be calibrated as they are part of the calibration system itself. Stability and knowledge of these components is critical to accurate calibration estimates, therefore, this is designed and packaged to constrain the thermal variability [6], and its temperature is monitored by the instrument.

There are three distinct calibration paths shown in Figure 1: Transmit Calibration (green); Receive Calibration (orange); and By-pass Calibration (green/orange). Each will be discussed in more detail in the following sections.

These calibration paths must take into account, not only the performance of a single TR module, but also the performance of the entire array as a whole. The overall DBF, with calibration, architecture is show in Figure 2. The TR module from Figure 1 is shown in blue, along with its FSP (First Stage Processor). Each channel (TR and FSP combined) connects to the antenna and to the final beamforming processor, the SSP (Second Stage Processor).

© 2011 California Institute of Technology.

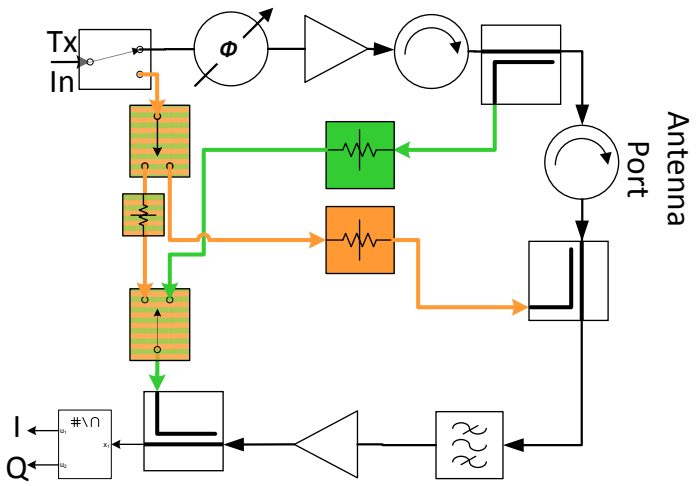

Figure 1 Digital calibration, simplified diagram. The transmitted signal is sampled from the upper right coupler and routed through the transmit calibration path (green) to the digitizer. The receive calibration signal routes to receiver from the lower right coupler. Bypass calibration is routed immediately out to the digitizer (green/orange path).

FSP (FIRST STAGE PROCESSOR) CALIBRATION ARCHITECTURE

An FSP is primarily an Analog-to-Digital Converter (or Digitizer) and an on-board processor. Each FSP estimates the deviation from baseline of each calibration path for its TR module, and applies appropriate corrective actions. The baseline includes correction factors that the FSP must know in order to balance the amplitude and phase across multiple channels. The correction factor includes information from the SSP, which has the information from every channel.

For each TR's transmit chain, the corrective actions include commanding a change in the TR module's analog phase shifter, which has limited precision, but is capable of lining-up the phase fronts of each independent transmitter to form a single, coherent transmit beam. The residual phase deviation, which is required for any additional ground processing, is conveyed to the ground by embedding the estimates of the deviations into the data stream. To maximize power efficiency, which is a key parameter for DSI, the transmitters of each TR module are run at maximum saturated power, so there is no control of the TR's transmitter power. However, final processing requires knowledge of each channel's power must be estimated and included in the data stream.

For the Receive portion, the corrective action is applied to the gain and phase of each channel in the digital domain through changing the weightings in the beamformer algorithm.

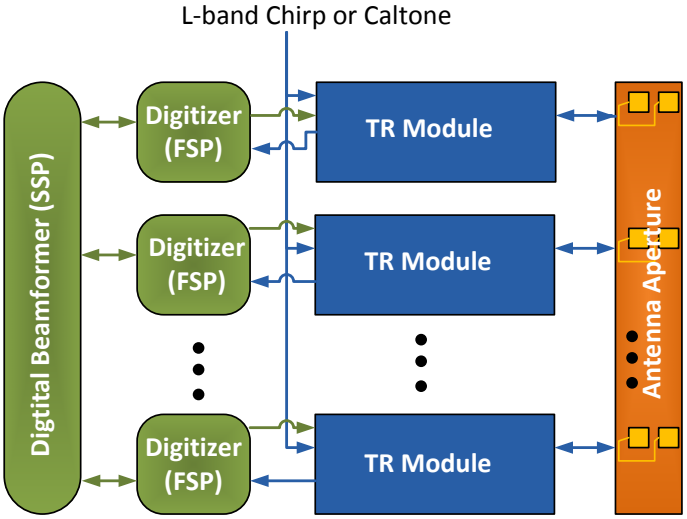

Figure 2 Digital Calibration Architecture. An L-band chirp or calibration tone is routed to all TR modules. The signals are digitized in the FSP, which estimates amplitude and phase. The SSP helps to align the digitizers in the FSP.

© 2011 California Institute of Technology.

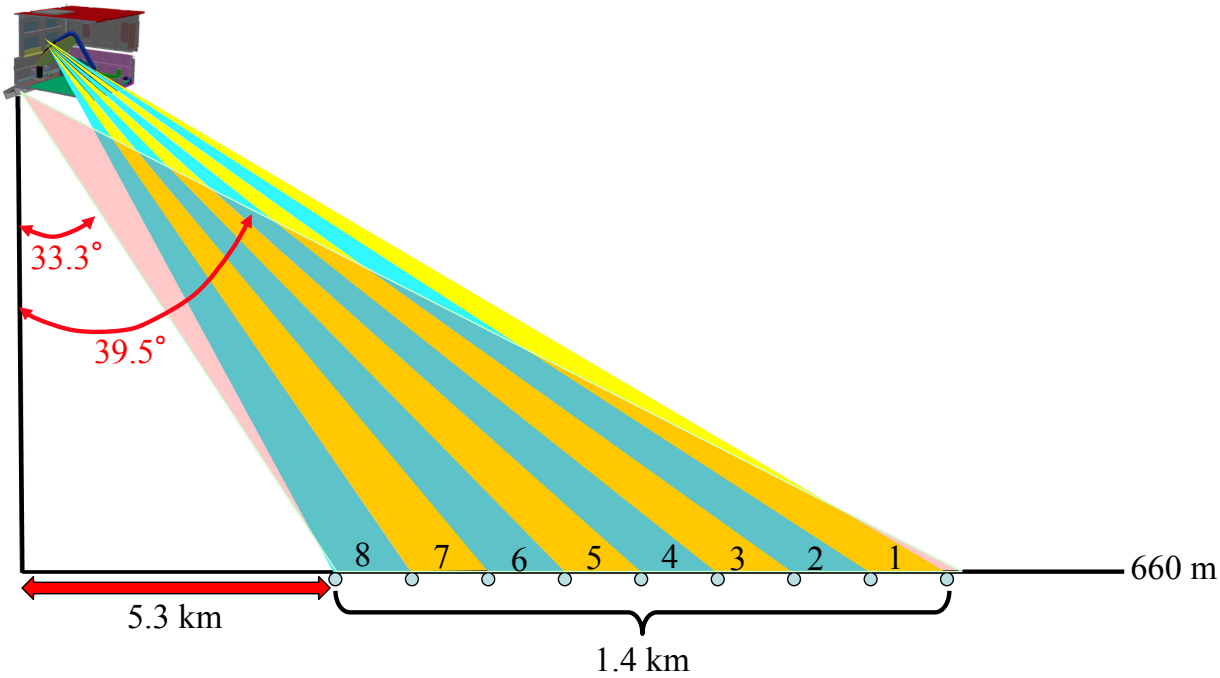

Figure 3 Eight-beam digital beamformer flown on DC-8 [7]. The 8 receiver beams each have an active calibration tone, similar to that for the proposed DESDynI beamformer. Each channel must be synchronized in real-time in order to perform on-board DBF, as planned for DESDynI—for this airborne demonstration all calibration and alignment was done during ground processing.

As part of the development of DSI (the proposed DESDynI SAR Instrument), and airborne demonstration was carried out on a NASA DC-8 [7]. The demo carried 8-channels, each of which was independently digitized and stored for ground processing. The configuration of the beams is shown in Figure 3. In order to align the channels for beamforming, detailed knowledge of the amplitude and phase of each channel is required, so a calibration signal was routed to each channel's receiver. The averaged calibration phase of each channel over all eleven flight segments is shown in Figure 4.

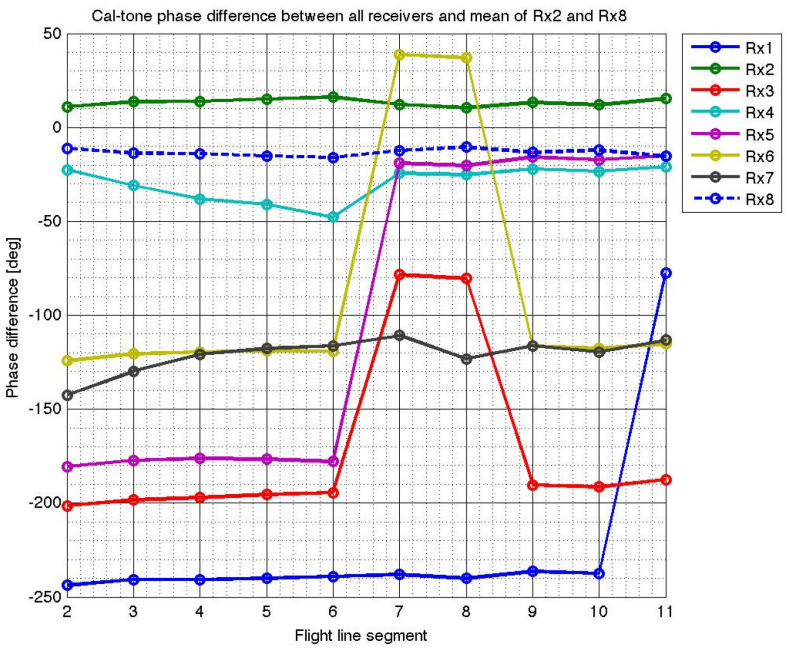

Figure 4 (a) Amplitude standard deviation vs. SNR, (b) Phase standard deviation vs. SNR, for three different bandwidths, using 20 us pulse width.

The results indicate that channels are generally well behaved, but suffer from occasional discrete phase jumps between flight lines, which is associated with manual power cycling of the receivers. The magnitude of these phase jumps are consistent with integer sample shifts between receivers in the data.

The importance of the bypass calibration, and the likely method for estimating the error in ADC (Analog to Digital Converter) alignment is indicated by results of corner reflector analysis from the airborne demo, see Figure 5. As the instrument flies over a corner reflector, the adjacent channels should receive peak signals

© 2011 California Institute of Technology.

simultaneously, but these are shifted due misalignment of the clocks. The demo architecture does not provide for adjustment among the channels ADC clocks, but also does not process the data in real-time so this can be corrected after flight. The proposed architecture for DESDynI would include on-board beamforming, which must detect and correct these clock skews. The hardware proposed for DESDynI would include multiple ways to adjust for this skew, once detected. To detect the skew, each calibration signal would be correlated with its reference. If the peak of the result shifts, then the clock of those channels must be adjusted to re-align the peak in the correlation. Overflights of corner reflectors could be used to confirm these adjustments are correct.

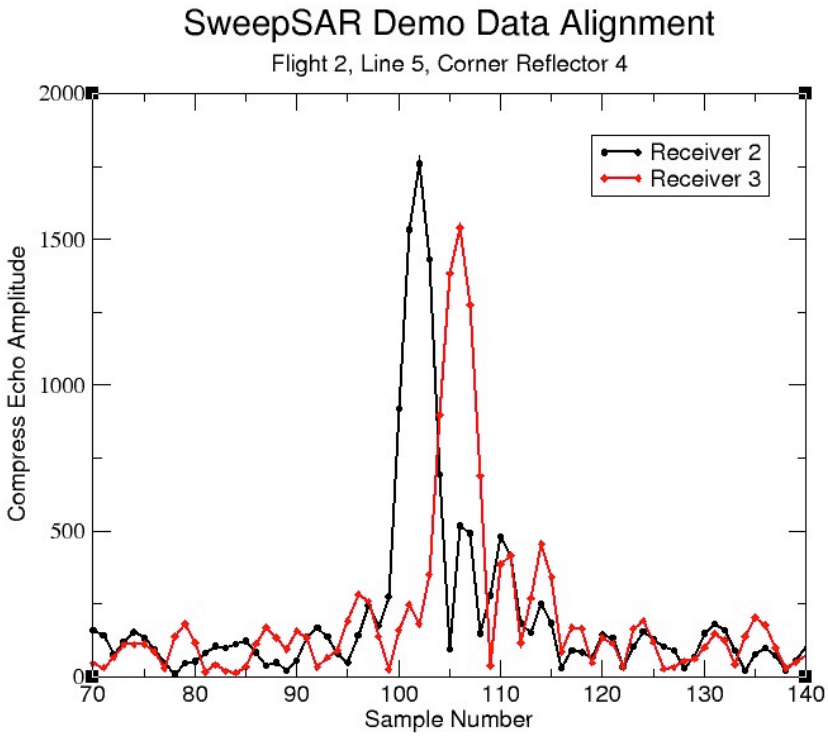

Figure 5 Shift in ADC samples are evident in these data collected from two adjacent channels during a corner reflector over-flight. Since the corner reflector is in a fixed location, the peak returns should line up for the adjacent receivers.

Calibration Algorithms

In order to levy requirements on the calibration, we must first quantify the errors than can be tolerated while successfully fulfilling science goals. The projected DESDynI instrument error budget key and driving mission requirements were presented at the Mission Concept Review in January 2011 [4]. The overall system error allocation is less than 0.1 dB error for the power estimate and less than 1.5 degree for the phase estimate after calibration. This system error budget is split between components inside and outside the calibration loop. Once the TR's calibration signal, either transmit chirp or receive caltone, has been digitized, it must be processed to determine its amplitude and phase. The accuracy of this estimate represents the knowledge with which we can characterize the system response. The algorithms are described below.

© 2011 California Institute of Technology.

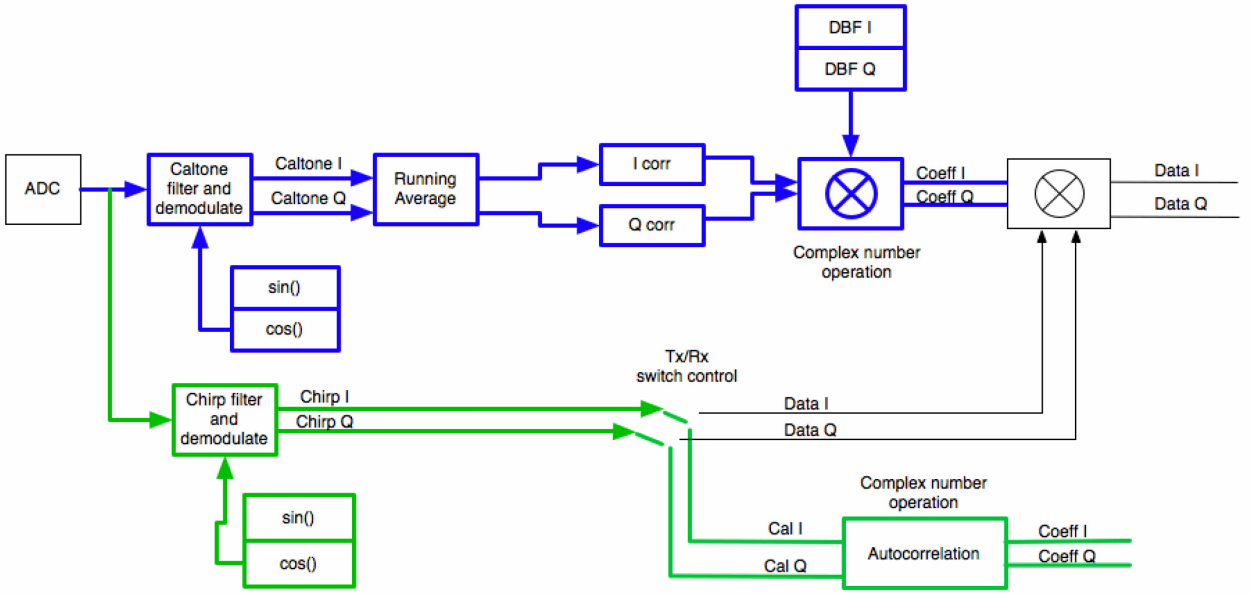

Figure 6 Preliminary receiver (blue) and transmitter (green) calibration algorithm implementation.

Table 1 Comparison of Digital Calibration Anticipated for DESDynI SweepSAR to the traditional calibration techniques.

	Standard Calibration				**Digital Calibration**			
	Receiver		**Transmitter**		**Receiver**		**Transmitter**	
	Gain (dB)	ϕ (°)	Gain (dB)	ϕ (°)	Gain (dB)	ϕ (°)	Gain (dB)	ϕ (°)
Control	±1	±10	±1	±10	±0.01	±0.06	±1	±3
Knowledge (residual)	±0.5	±2	±0.5	±2	±0.01	±0.06	±0.01	±0.06

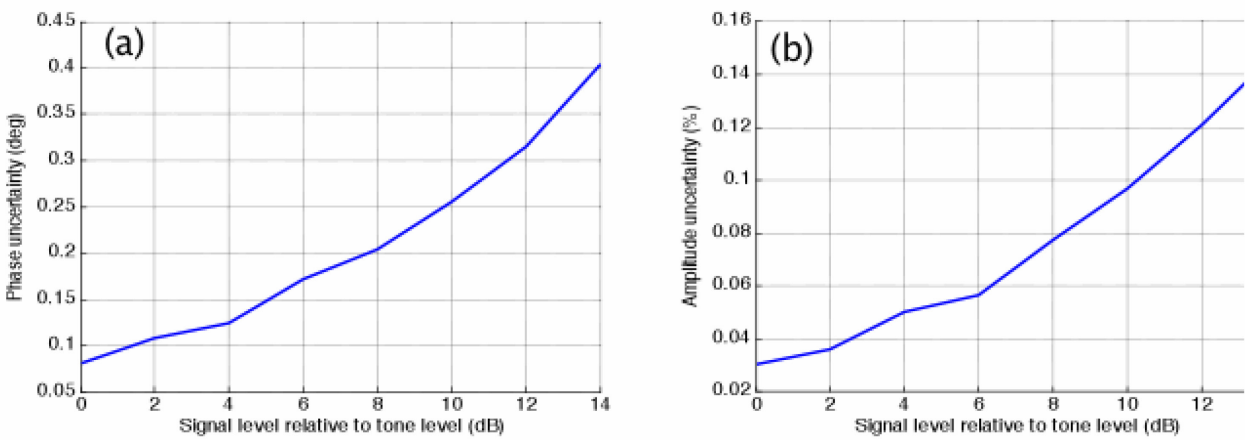

Figure 7 (a) Phase uncertainty vs. signal to caltone, (b) Amplitude uncertainty vs. signal to caltone, for 400 us duration of the tone.

© 2011 California Institute of Technology.

The chirp is filtered and shifted to baseband, after which it is passed to the autocorrelation block that performs complex multiplication with the signal's conjugate (waveform preloaded in memory) and summed over all samples, corresponding to the autocorrelation at one point in time. The results are I and Q values from which we can estimate phase and amplitude. These values are routed to the SSP where they are packed together with science data and analyzed in post-processing. The initial simulations shown plotted in Figure 7 indicates that we can meet requirements using the outlined calibrations algorithm as long as we can achieve an SNR of 15 dB or higher and aggregate a small number of pulses together—approximately 25.

The transmit portion of the T/R module includes a phase shifter with resolution of 3 degrees that can be controlled through the FSP. When the new value has drifted more than 3 degrees from the baseline value, the FSP will command the phase shifter to change its value, keeping the transmit beams aligned.

One may note that in Table 1[7] [8], the calibration control is less precise than calibration knowledge for the transmitter, but knowledge and control are the same for the receiver. This is due to the transmitters' control being achieved through analog components, while each receiver's control is implemented within the digital beamformer.

SOURCES OF ERROR

The two major sources of error in this approach are the components that are not within the calibration loop, and systematic or coherent interference.

Fortunately, components that are not within the calibration loop are mainly passive and should be well-behaved. This assumption is in the process of being tested as real hardware is completed and tested over temperature. The components that fall outside of the proposed active digital calibration include elements outside of the TR module such as the antenna aperture, as well as components within the TR module, but outside the calibration paths, such as the circulator, shown in Figure 1. Other components that cannot be calibrated as part of the real-time digital calibration are the components that are unique to the calibration circuitry itself, such as the orange and green attenuators shown in Figure 1.

Estimates of the contribution from the thermal variability of components outside of the calibration loop increase amplitude uncertainty by a worst case (correlated errors) of slightly less than 1.3 dB. Calibration circuitry introduces worst case uncertainty of an additional 0.4dB, for a total worst case uncertainty of nearly 1.7dB.

Similarly for phase, the estimated contribution to uncertainty of components outside of the calibration loop is nearly 18 degrees, with an additional 0.4 degrees from the calibration circuitry itself.

With the exception of the calibration switches, all of these components are completely passive and all are extremely broadband, and therefore can be well characterized by temperature monitoring. With the assumption that the contribution of these components can be estimated to within 5 degrees C, the total uncertainty (again worst case) in amplitude and phase are 0.3dB in amplitude and 0.8 degrees in phase.

The assumption that contributions from thermal variability can estimated to within 5°C is conservative, but includes not only the estimated precision of the on-board thermal telemetry, but also the uncertainty implicit in the estimate of performance versus temperature. More specifically, the variability of the various components will be measured and modeled, but both those measurements themselves and the resulting models will include some uncertainty. This is clearly true for the contributions to variability from the distributed components, such as the antenna aperture and the cables feeding the TR modules, which must span the >3m antenna feed. No practical quantity of thermal sensors can plausibly characterize the exact thermal profile of these components over all possible scenarios. Once more detailed modeling is completed for these contributions, the 5°C thermal uncertainty could be reduced by more than half.

Without temperature monitoring and correction, using the worst case or correlated variances is reasonable since the temperatures of devices will typically be highly correlated. However, by removing thermal contributions through monitoring and modeling, the residual errors should be uncorrelated. This should further reduce the uncertainties in amplitude and phase to 0.3dB and 0.8 degrees, respectively. The measurement and modeling of thermal performance is underway and should yield refined estimates, however, these remain well above the requirements stated in Table 1. Estimation and/or final reduction of these residual errors may require additional calibration sources, such as an active calibration source on the antenna reflector, or a through periodic ground calibration. Studies of these options are underway.

© 2011 California Institute of Technology.

The other major source of error is due to systematic, coherent interference in the calibration estimate itself. Unlike thermal noise, any coherent leakage cannot be reduced by averaging. The source of this interference would most likely come from internal leakage or reflections within the system. It becomes clear from Figure 8 that such signals must be minimized. In this figure, the worst case impact, which occurs when the interference's phase is off by π/2, is shown for interference levels from -30 to -60dBc.

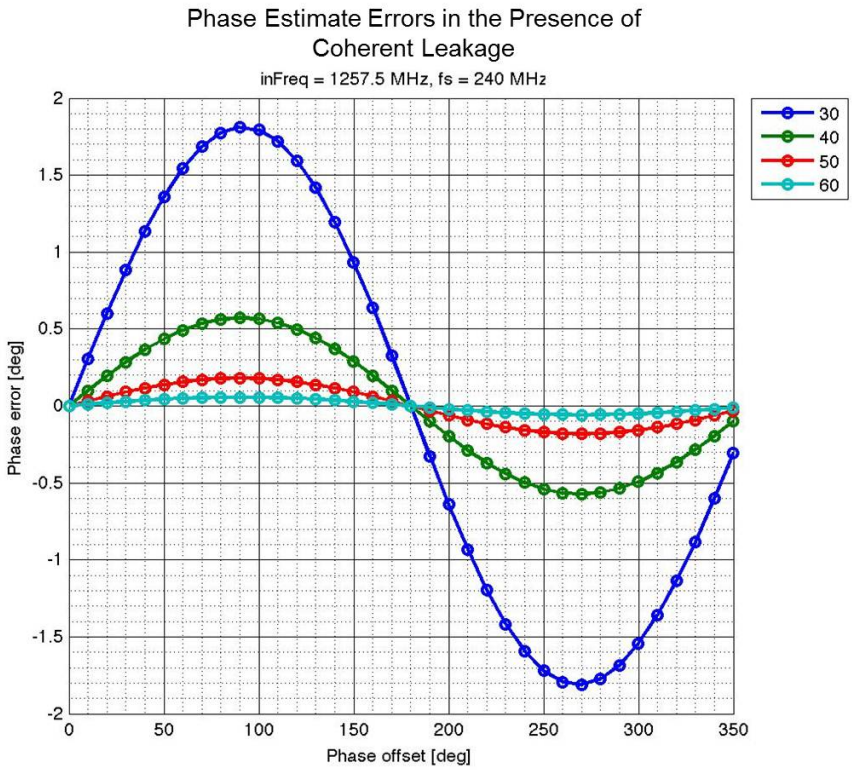

Figure 8 Impact of coherent interference on signal phase estimates. The error in estimating phase due to a coherent interferer, most likely due to leakage or reflections for four levels of signal-to-interference ratio (-30, -40, -50, and -60 dB).

Leakage can likely be managed down to below the -60dBc level with careful packaging, but reflections from multiple sources with an instrument spanning more than 3 meters, and with a reflector dimension exceeding 10 meters will be challenging. One immediate source of coherent interference of this type is from the calibration signal itself. The common calibration signal must be routed from the transmit beamformer, shown in light blue in Figure 9, to each TR module, shown in red. Since the feed is greater than 3 meters long, the RF cables must be quite long, and even with above average return loss of 20 dB at each end of the cable, a calibration echo will be present at roughly -40dBc. Studies are underway to determine the best return loss possible, as well as ways to reject the ghost in the calibration algorithms.

© 2011 California Institute of Technology.

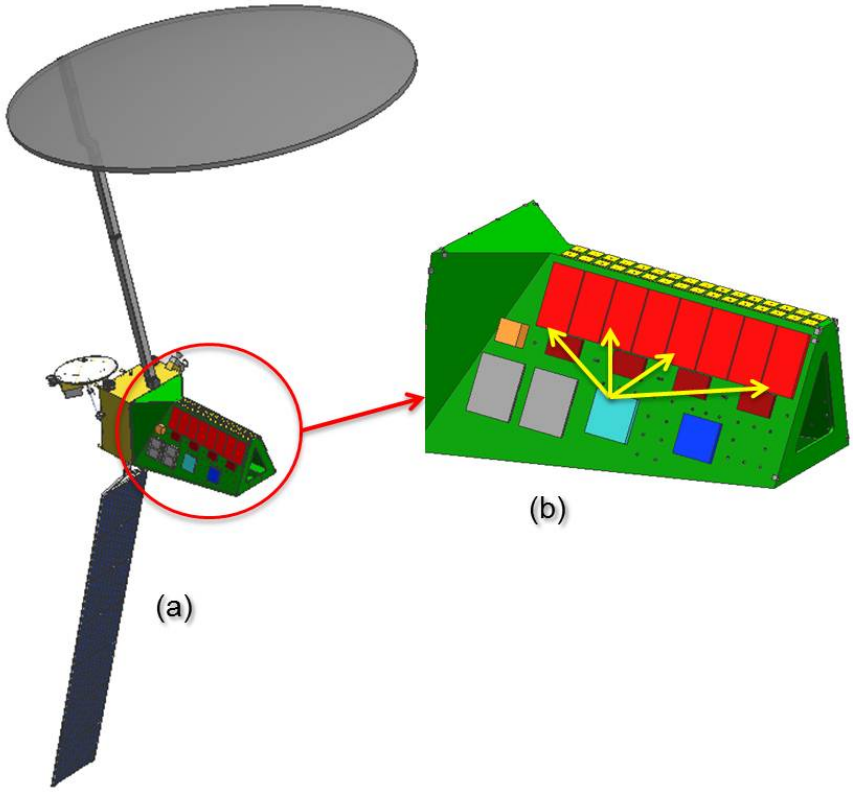

Figure 9 (a) Proposed configuration for the reflector & feed, with (b) close-up view of the layout of TR modules (red) over the >3 meter feed structure (green). The central transmit beamformer (light blue), routes the common RF signals to all of the TR modules over equalized paths roughly indicated by the yellow arrows.

SUMMARY

The digital calibration techniques described in this paper, will improve TR module calibration precision and accuracy compared to the prior state-of-the-art by more than an order of magnitude in key performance parameters. Digital calibration allows for an unprecedented level of calibration parameter knowledge. When coupled with a DBF, this allows for an equally impressive level of control, reducing receiver calibration. These levels of correction and knowledge expected through digital calibration meet the baseline requirements for implementation of SweepSAR technique in the proposed DESDynI radar instrument [4]. The proposed DESDynI SweepSAR requirements are not, and could not be met with traditional calibration techniques, such as those employed on UAVSAR [9].

The long-term stability of calibration control and knowledge would be improved using Digital Calibration, as compared to standard techniques. Digital Calibration actively tracks real-time performance, rather than relying upon just pre-launch thermal characterization and temperature-based corrections, which is how traditional TR module calibration is performed. Since our closed-loop digital calibration does not depend solely upon a priori knowledge of modules' performance, it is also able to track any changes that might occur independently of temperature, such as aging and radiation effects. This also has the potential to shorten the pre-launch testing time significantly, since the real-time digital calibration does not require extensive characterization. Additional studies are underway to further reduce sources of calibration error estimates.

As previously discussed, the Digital Calibration technique would enable the proposed DESDynI mission to implement a precision DBF, required to utilize the SweepSAR architecture, which would reduce instrument cost by as much as 50% and mass by as much as 70% [3].

© 2011 California Institute of Technology.

ACKNOWLEDGMENTS

This work is supported by the proposed DESDynI Project, and was carried out at the Jet Propulsion Laboratory, California Institute of Technology, under a contract with the National Aeronautics and Space Administration

REFERENCES

[1] "Earth Science and Applications from Space: National Imperatives for the Next Decade and Beyond", National Research Council of the National Academies, The National Academies Press, 2007.

[2] Freeman, A., Krieger, G., Rosen, P., Younis, M., Johnson, W., Huber, S., Jordan, R., Moreira, A.,"SweepSAR: Beam-forming on receive using a reflector-phased array feed combination for spaceborne SAR," *Radar Conference, 2009 IEEE*, vol., no., pp.1-9, 4-8 May 2009, doi: 10.1109/RADAR.2009.4977140

[3] Ksiensky, D., et al., "DESDynI Payload Electronics Risk Assessment and Spacecraft Concept Comparison," Final report by Aerospace Corporation for JPL subcontract #1405623, December 7, 2010.

[4] NASA Mission Concept Review: "Deformation, Ecosystem Structure, and Dynamics of Ice – DESDynI", JPL, Pasadena, January 2011, for material contact Howard Eisen, Howard.J.Eisen@jpl.nasa.gov

[5] Chamberlain, N.; Ghaemi, H.; Giersch, L.; Harcke, L.; Hodges, R.; Hoffman, J.; Johnson, W.; Jordan, R.; Khayatian, B.; Rosen, P.; Sadowy, G.; Shaffer, S.; Shen, Y.; Veilleux, L.; Wu, P.; , "The DESDynI synthetic aperture radar array-fed reflector antenna," *Phased Array Systems and Technology (ARRAY), 2010 IEEE International Symposium on* , vol., no., pp.381-386, 12-15 Oct. 2010

[6] Hoffman, James; Del Castillo, Linda; Jenabi, Masud; Miller, Jennifer; Birur, Gajanana; , "Advanced thermal packaging for high power TR modules," *Radar Conference (RADAR), 2011 IEEE* , vol., no., pp.985-988, 23-27 May 2011

[7] Hensley, S., G Sadowy, R Chao, E Chuang, D Escoto, H Ghaemi, M Grando, A Guarnera, B Hawkins, B Heavey, B Latham, E Liao, S Lin, J Martin, T Michel, T Miller, R Muellerschoen, D Perkovic, M Quddus, P Rosen, M Sanchez- Barbetty, S Shaffer, J Shimada, I Tan, J Tanabe, K Tham, T Thrivikraman, L Veilleux, "First Results from an Airborne SweepSAR Demonstration at Ka-band", IGARSS, Vancouver, July 28 2011

[8] Chamberlain, N., Sadowy, G., "The UAVSAR Transmit / Receive Module," Aerospace Conference, 2008 IEEE , vol., no., pp.1-15, March 2008

[9] Critical Design Review: "UAVSAR", JPL, Pasadena, November 2005, for material contact Cathleen Jones, Cathleen.E.Jones@jpl.nasa.gov

© 2011 California Institute of Technology.