NASA USRP Internship Final Report

Percussive Augmenter of Rotary Drills (PARoD)

Aaron Ressa[i]
The Ohio State University, Mechanical Engineering

Mentor: Dr. Yoseph Bar-Cohen[ii]
Project Principal Investigator: Dr. Mircea Badescu[iii] and Dr. Stewart Sherrit[iv]

Abstract. A percussive augmenter is being developed and it is designed to add ultrasonic hammering to a conventional commercial rotary drill through an adapter using a piezoelectric actuator. The combination of ultrasonic hammering and rotation creates a drill that requires low power and low axial load while providing faster penetration than conventional rotary-only drills. These characteristics make percussive augmentation of rotary drills ideal for not only planetary exploration but commercial applications as well. The purpose of this internship was to produce, test, and optimize an augmenter that drives a 2 inch diameter bit. This task was part of the percussive augmenter's phase II of an ongoing contract and it involved increasing the capability of the .25 inch version of the augmenter prototype that was developed in phase I. Due to fabrication delays of the augmenter, an extensive part of the test effort was conducted using previous rotary and hammer drill prototypes. These tests focused on drilling deep over long periods of time to provide for effective stress test of the drill. Modifications were made to the drill, its components, and the testing procedure to achieve desired borehole depths. These results were used to start initial testing on the 2 inch augmenter and provide preliminary data on the augmenter's ability to significantly improve penetration rate over conventional rotary-only drills.

I. Introduction

Planetary exploration by NASA has an increasing need for more efficient and effective drilling methods that require low power and low axial load. In addition the drill needs to be able to survive the extreme environments associated with planetary exploration[1]. A focus of the Non-Destructive Evaluation and Advanced Actuators (NDEAA) Lab at the Jet Propulsion Laboratory is to develop drills that utilize ultrasonic hammering as a method of penetrating subsurfaces. The developed novel ultrasonic hammering mechanisms are driven by piezoelectric materials. These materials change their shape under applied voltage and when exposed to a rapidly alternating current, they vibrate rapidly at the related frequency. Since we have the ability to fine tune the supplied current, piezoelectric materials can be used to create highly controllable mechanisms to

[i] NASA USRP Fall Intern, Jet Propulsion Laboratory, The Ohio State University, Undergraduate student
[ii] NDEAA Lab Group Supervisor, Jet Propulsion Laboratory/ Jet Propulsion Laboratory, California Institute of Technology, 4800 Oak Grove Drive, Pasadena, CA 91109
[iii] NDEAA Lab Scientist, Jet Propulsion Laboratory/Jet Propulsion Laboratory, California Institute of Technology, 4800 Oak Grove Drive, Pasadena, CA 91109
[iv] NDEAA Lab Scientist, Jet Propulsion Laboratory/Jet Propulsion Laboratory, California Institute of Technology, 4800 Oak Grove Drive, Pasadena, CA 91109

generate ultrasonic motion[2].The piezoelectric materials are ceramic, which makes them very durable in harsh and rapidly changing conditions[1]. Piezoelectric materials were used by the JPL Advanced Technology Group to create the ultrasonic/sonic drill/corer (USDC) that uses ultrasonic hammering to drill. This drill proved to be very effective and was able to operate in extreme environments. While hammering is an effective method for fracturing rocks, it does not allow for effective removal of the cuttings which build up and impedes drilling in deep boreholes. While rotation is not highly effective method to penetrate rock it is excellent for removing cuttings from the borehole. Combining hammering and rotational drilling motions results in very rapid penetration rates, of up to 1000 percent over conventional rotary-only drills[3]. This increase in drilling rate as well as quieter operation[4] than conventional drills gives the drill applications for the commercial construction industry and has led to a project to develop a percussive adapter to augment rotational motion of a commercial drill with ultrasonic percussion[5] driven by a piezoelectric transducer. The percussive augmenter design consists of 5 main components, adaptive shaft, slip ring, transducer, bit adapter, and the bit. The drill is connected to a slip ring through the adaptive shaft. The slip ring allows wired connection to the ultrasonic transducer. The bit adapter is mounted to the horn of the transducer and the bit is secured to the adapter by brazing. A percussive augmenter prototype was developed to operate a .25 inch commercial bit. The purpose of this internship was to fabricate and perform preliminary operational testing on a model using a 2 inch diameter bit based on the earlier prototype.

II. Auto-gopher Activities

Due to the percussive augmenter fabrication delays testing was conducted on the similar drill type called the auto-gopher in order to gain a better understanding and familiarization with ultrasonic drilling. The auto-gopher's drilling mechanism operates in the same fundamental way as the percussive augmenter. The auto-gopher utilizes a piezoelectric transducer to drive actuation of a rotating bit that is amplified with impacting momentum of a free mass in between the transducer and the drill bit. Rotation is provided by an electric motor controlled with a separate power supply. The operation of the transducer is controlled with a Labview program that continuously adjusts the operating frequency to maximize the drilling efficiency. The following diagram represents the experimental setup of the auto-gopher during testing activities.

A. Establish running auto-gopher.

The Auto-Gopher's initial condition was inoperable. Repairs made to the transducer included soldering lead wires to the control cable and the addition of protective tape to sensitive transducer components. The motor controller driving the electric motor that rotates the bit also required rewiring. Reinforcements were also added to the testing support structure as well as a pulley system to accommodate the controlled weight on bit parameter.

B. Operational testing

Initial testing began with the goal of drilling to a depth of 4 inches, but penetration of only 3-5 millimeters could be achieved before the rotation of the drill bit locked and ceased drilling. The loss of rotation was determined to be a combination of two factors, the amount of teeth on the drill crown and alignment on the bit. The original four-tooth crown wasn't allowing smooth rotation of the bit on the surface of the rock. This issue was resolved by replacing the four tooth crown with a six tooth crown. The alignment issue was a result of worn bearings. Shim stock was placed between the bearing face and the drill bit to address the issue.

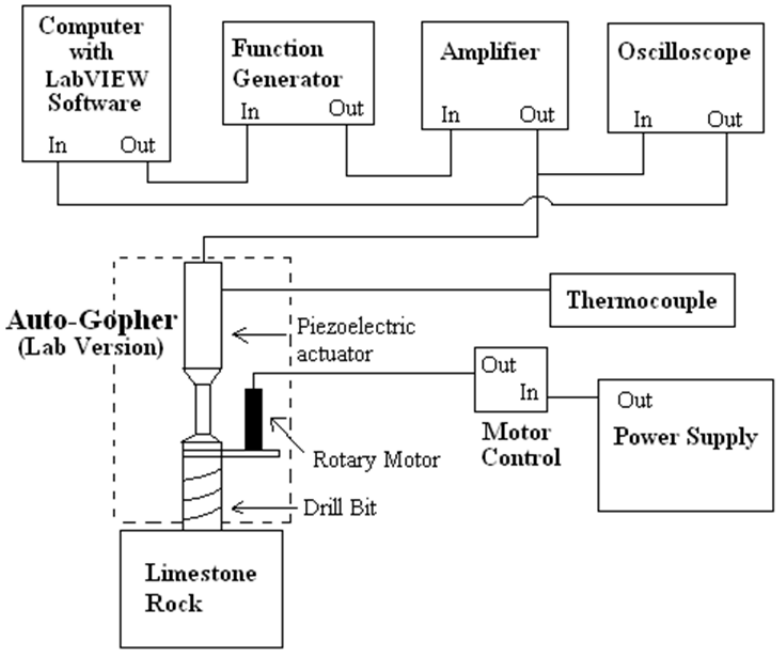

Figure 1: Experimental setup diagram [created by previous intern Robert Rovai].

C. Initial testing and data collection

Once the drill was working, data was collected under varying free mass and control voltages conditions in order to monitor consistency and recreate results reported by the previous intern in his report*. Table 1 shows the data collected during initial testing with a preload of 79.1 N, a weight on bit of 63.3 N, a rotational speed of 100 RPMs, and an initial transducer frequency of 5190 Hz.

Table 1. Initial Auto-gopher drilling depths achieved with varied parameters.

Free Mass (g)	Mass Type	Control Voltage	Depth (mm)	Drill Time	Duty Cylce	Time on (s)
120	Disk	.3 Volts	5.1	10 min	50%	5
120	Disk	.3 Volts	4.1	10 min	50%	5
165	Donut	.3 Volts	5.8	10 min	50%	5
165	Donut	.3 Volts	7.5	10 min	50%	5
165	Donut	.4 Volts	7.5	10 min	50%	5
165	Donut	.4 Volts	19.2	10 min	50%	5
165	Donut	.4 Volts	14.8	10 min	50%	5
165	Donut	.4 Volts	12	10 min	50%	5
165	Donut	.4 Volts	9.4	10 min	50%	5
165	Donut	.4 Volts	18.9	10 min	50%	5

The results demonstrated a lack of consistency in the drilling rate, with depth variances as much as 164 percent and an average variance of ±27.5 percent from the mean rates of similar trials. The results compared to the results reported by the previous intern suggest that the system was also underperforming. Previous tests, conducted with the four tooth crown, had obtained a drilling rate of 1.6 mm per minute as opposed to the average 1.61 mm per minute that was obtained with the six tooth crown, a result that was expected to be higher with the addition of 2 more teeth.

The results prompted a closer inspection of the alignment. A higher tolerance fix was attempted by replacing the ball bearing with a graphite bushing. The bushing provided good alignment but produced excessive amounts of heat that caused the aluminum bit to expand and seize in the bushing after 3 minutes of run time at 100 RPMs. The graphite bushing was replaced with the original ball bearings, which were modified with a spacer piece added between the stacked bearing, as well as being tightly repacked. Also, throughout the initial testing phase it became apparent that the gear head was dislodging from the bit due to angled meshing of the gears arising from the alignment of the bit. To fix this, the gear head was secured with two new set screws and the bonding adhesive J-B Weld.

The settings used for several tests in Table 1 were repeated in order to evaluate the effects of the realignment. Table 2 shows the original tests from Table 1. Table 3 shows the results of testing after the realignment.

Table 2. Excerpt of experiments from Table 1.

Free Mass (g)	Mass Type	Control Voltage	Depth (mm)	Drill Time	Duty Cycle	Time on (s)
165	Donut	.4 Volts	7.5	10 min	50%	5
165	Donut	.4 Volts	19.2	10 min	50%	5
165	Donut	.4 Volts	14.8	10 min	50%	5
165	Donut	.4 Volts	12	10 min	50%	5
165	Donut	.4 Volts	9.4	10 min	50%	5

Table 3. Repeated Experiments repeated from Table 2.

Free Mass (g)	Mass Type	Control Voltage	Depth (mm)	Drill Time	Duty Cycle	Time on (s)
165	Donut	.4 Volts	25.5	7 Min	50%	5
165	Donut	.4 Volts	26.5	7 Min	50%	5

The results show the new alignment produced a more consistent depth, varying ±1.9 percent from the average depth as opposed to the previous results of ±27.5 percent. The drilling rate also increased from 1.61. mm/min to 3.71 mm/min, a 230 percent increase in performance. This indicates that alignment had a major impact on the performance of the drill.

D. Deep Drill Test

After improvements to the alignment was made, a deep drilling test attempted to reach a depth of 100 mm (~4 inches). The test was conducted with a control voltage of .45 V, a preload of 79.1 N, a weight on bit of 63.3N, a donut shaped free mass of 165g mass, a rotational speed of 100 RPMs, and a duty cycle of 50% at 5 seconds on. The results are plotted in figure 2 with the depth graphed as a function of time.

The drill demonstrated a stable penetration rate after the initial entry and until the bit seized up in the borehole. After examining the wedged bit, it was clear that the structure had flexed during drilling, causing misalignment of the bit with the hole. The temperature of the crown was measured to be 61 degrees Celsius which suggest that fictional forces were significant enough to cause the electric motor to torque the structure instead of the bit.

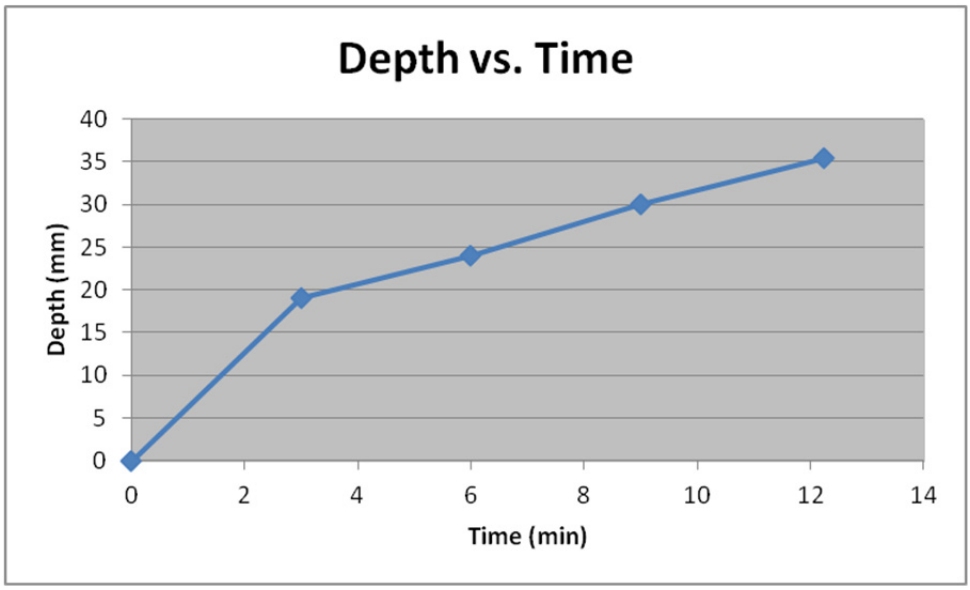

Figure 2. Depth as a function of time. *The depth was recorded every 3-4 min by using calipers to measure the displacement of the drill along its guiding rail that attaches the auto-gopher to the test structure. The drill was run till the bit seized in the hole at a depth of 35.5 mm, 64.5 mm short of the depth goal.*

E. New Testing Structure.

In order to address the excessive flexibility of the test structure, the auto-gopher was retrofitted to attach to a different test structure that was more resistant to the torsional feedback forces of the motor by using two separate guide rails instead of one. Figures 3 and 4 show the auto-gopher attached to the previous and new structure.

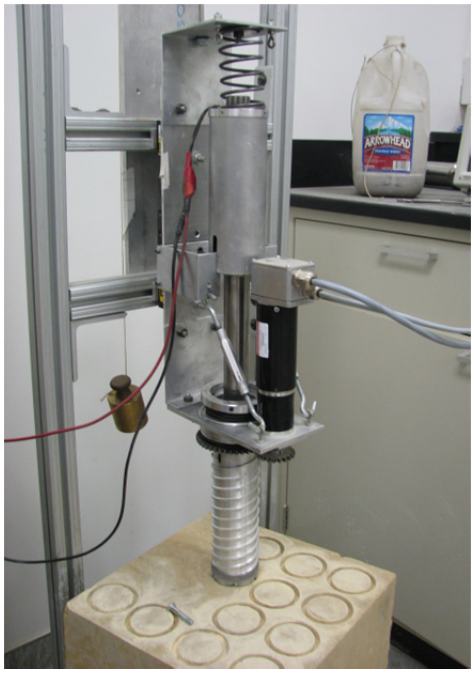

Figure 3. Previous Testing Structure

Figure 4. New testing Structure.

Two tests were conducted with a control voltage of .45 V, preload of 79.1 N, weight on bit of 63.3 N, rotational speed of 100 RPMs, initial frequency of 5290 Hz, and a donut shaped, 165g free mass. The results of these tests are shown in figure 5.

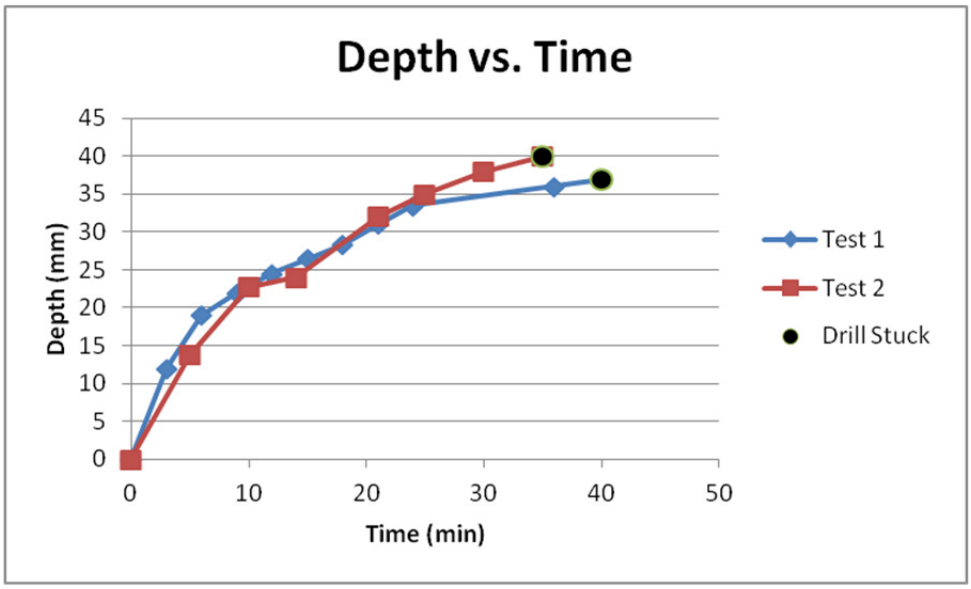

Figure 5. Depth vs. Time graph of new structure initial tests. *This plot was constructed from depths measurements taken by measuring auto-gopher displacement along its guide rails at 5 to 10 minute intervals. The plot also shows where the drill seized in the borehole and had to be removed by hand.*

Test 1 and 2 of the auto-gopher on the new structure demonstrated consistent results until approximately 35 mm, when there penetration rates separated as the bit became wedged in the hole at slight different depths of 37 and 40 millimeters. The crown was measured to be 55° C when it was removed, which again suggested that there had been an excessive amount of friction. An examination of the 37 mm hole found a discrepancy of 3 mm in depth between opposing sides of the borehole. Calculating the geometry of the hole showed that the bit had entered the rock at an angle of 4.46° off the vertical.

F. New Testing Procedure and additional tests.

In order to address the angled entry issue, two steps were added to the testing procedure. First, before the test is started, the drilling medium's surface is adjusted to be perpendicular to the free hanging bit, preventing the surface forcing an angled entry by overpowering the springs constraining the lateral motion of the bit. Secondly, the drill is re-centered over the hole after 3-5 mm to compensate for the walk of the bit when the drill initially makes contact with the drilling surface.

Using the new testing procedure two more tests were conducted using a control voltage of .45 V, preload of 79.1 N, rotational speed of 100 RPMs, initial frequency of 5290 Hz, and a donut shaped, 165g free mass. The weight on bit was changed between tests, from 63.3 N used in test 1 to, the free weight of the bit, 73.4 N. The results are plotted in Figure 6.

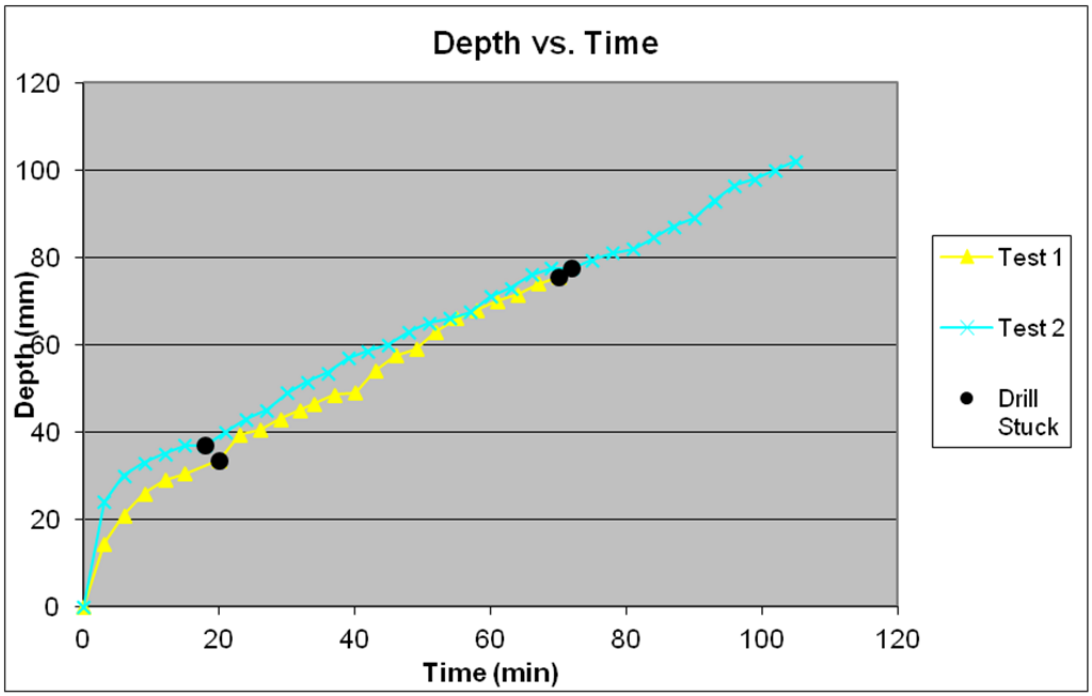

Figure 6. New procedure drilling results. *The depth was recorded at 3 min intervals during drilling measured by the displacement of the drill along the guide rails. Points at which the drill sized in the hole and required intervention to continue drilling are also plotted.*

Using the new procedure the bit was found to seize on the core rather than the borehole wall. In order to remove the bit from the hole it was necessary to break the core and then use a rod to push the core from the bit. Once the core was removed, the drill was placed back in the hole to continue drilling. Figure 7 shows seized core and figure 8 shows core section after removed from the bit.

Figure 7. Seized core broken off.

Figure 8. Core Sections removed corer

During the first test, the drill became stuck at 33.5 mm. The core was removed and the drill continued to a depth 75.5 mm where the drill seized again could no longer continue even after the core was removed.

For the second test, the counter balance mass that controlled the weight on bit was removed, allowing the entire free weight of the bit, 73.4 N, to be placed onto the rock sample. During this test the bit became stuck at 37 and 77.5 mm. But the drill was able to continue after getting seizing on the core for the second time and was stopped once it reached its goal of 102 mm (~4 inches). After the bit was removed the geometry of the hole was examined by measuring the depth discrepancy between opposite sides of the hole. Those measurements showed a 1.16° angling of the hole off the vertical, which was an improvement over the previous procedure's 4.46° off vertical.

G. Proposed auto-gopher modifications for hard rock.

The results of the two deep drill tests revealed the depths at which the bit seized on the core were consistent between tests. The seizers also occurred at approximately a factor of two, suggesting that alignment was the limiting factor to the drills depth.

In order to address this issue without making major modifications to the auto-gopher, the proposed solution focuses on addressing one, easily changeable element of the drill, the crown. The purpose for these modifications would be to increase the tolerance for misalignment of the bit, by creating a small gap between the core and the coring bit, allowing the bit to angle slightly without seizing on the core. To create this gap the crown would be modified so half of the drilling teeth are offset 1 mm inside the inner radius the crown. The other half of the teeth would be offset 1 mm outside the outer radius of the crown. In addition the crown would also include a slight tapper on the inside of the bit from the base to the top of the crown. Variations of the modified crown with several offsets ranging from 1 to 3 mm would be tested as well.

H. Soft rock drilling tests

Once the goal of 102 mm was reached, testing shifted to soft rock tests. Using the knowledge acquired in the hard rock tests, drilling tests were conducted in an attempt to reach the maximum depth the bit is physically possible of, 154 mm (~6 inches). The soft rock tests used a field sample of gypsum as the drilling medium. The soft rock tests also included drilling on rough and uneven surfaces, rather than the smooth surface of the hard limestone samples.

Two tests on gypsum were performed using a control voltage of .45 V, preload of 79.1 N, rotational speed of 100 RPMs, initial frequency of 5290 Hz, and a donut shaped, 165g free mass. The weight on bit was changed between tests, from 63.3 N used in test 1 to, the free weight of the bit, 73.4 N. The results are shown in Table 4.

Table 4. Soft Rock Drilling Results.

Test Name	Drill Time (sec)	Depth (mm)	Penatration Rate (mm/min)
Test 1	184	154	50
Test 2	170	140	49

Both tests used the testing procedure established during the hard rock testing, were the bit was centered after a few millimeters of penetration. Test 1 was able to reach the 154 mm depth,

but during test 2 the whole gypsum test sample cracked and testing was stopped about 140 mm. Figure 9 shows the hole drilled in test 1.

Figure 9. Borehole drilled in soft rock test 1. *Here the 154 mm (6 inch) borehole drilled in test 1is show after the cuttings had been removed from the hole.*

III. Percussive Augmenter

The percussive augmenter is an adapter that attaches to a conventional rotary drill and adds ultrasonic hammering to a 2 inch diameter coring bit. Adding ultrasonic hammering can significantly increase the penetration rate as well as the power efficiency of the drill. The current augmenter design, as seen in figure 10 and 11, is based off a previous prototype augmenter that was developed for an earlier phase of the project that drove a regular 0.25 inch drill bit. The purpose of my internship was to assemble and test the new augmenter but, as mention earlier, fabrication delays only allowed enough time to assemble the augmenter and perform some initial electronic testing of the piezoelectric transducer.

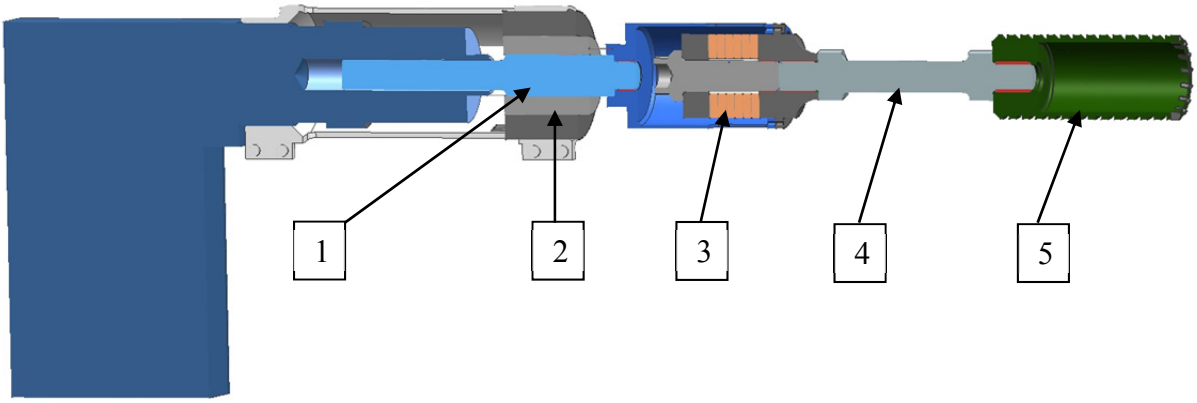

Figure 10. Percussive augmenter cross section. *The cross section shows the entire percussive augmenter adapter assembly, which composed of 5 main components, the drill shaft adapter (1), the slip ring (2), the transducer (3), the bit adapter (4), and the 2 inch coring bit (5).*

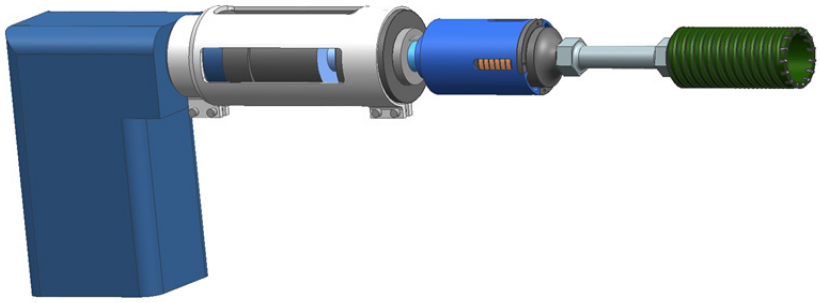

Figure 11. Percussive augmenter rendering. *This figure shows a 3 dimensional rendering of the cross section shown in figure 10.*

A. Fabrication

Most of the percussive augmenter's components were fabricated by outside manufactures to insure quality and accuracy of the components. This is important because ultrasonic mechanisms are sensitive to any extra material or changes from the original design and will not operate as excepted and will negatively affect the performance of the hammering.

B. Impedance Testing

Before the transducers were integrated into the assembly, an impedance analyzer was used to scan the resonance and anti-resonance frequency of the transducer. The scan was used to calculate an electromechanical coupling coefficient of 0.493, which is the efficiency of conversion between mechanical and electrical energy in the transducer. The impedance scan can also be used as a base line to compare future scans to evaluate any changes in performance that may have occurred over time. Figure 12 shows a screen capture from the impedance analyzer.

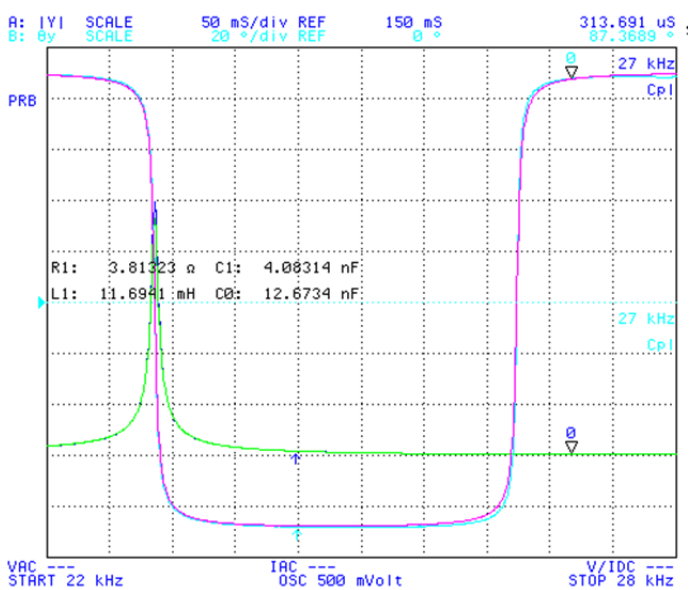

Figure 12. Impedance Scan. *This is a scan of the free resonance frequency of one of the transducers that will drive the augmenter. The scan shows a clean resonance frequency at 23 kHz and an anti-resonance frequency at 26.5 kHz. From this scan an electromechanical efficiency of .493 was calculated using equivalent circuits.*

C. Assembly

Once the impedance was scanned and recorded, the drill was assembled. Figure 13 shows the assembled percussive augmenter adapter attached to the drill.

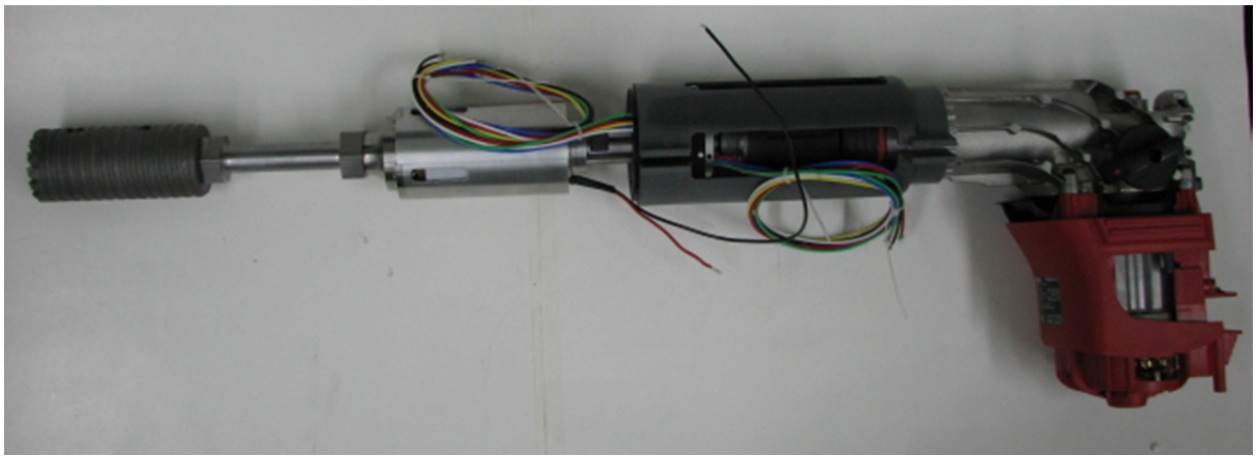

Figure 13. Assembled Augmenter. *The augmenter is assemble and is awaiting the fabrication of a mounting plate that will allow integration into the testing structure to begin testing.*

IV. Conclusion

In this reported task the focus has been on the support of the development of a percussive augmenter for commercial rotary drills using an ultrasonic hammering mechanism that is driven by a piezoelectric actuator. During the internship the fabrication and assembly of the percussive augmenter were completed and the initial steps of the testing phase have begun. Impedance scans have been performed on the transducers to predict their optimal operating parameters. With these objectives complete, the test drilling can begin soon but it is delayed beyond the course of this internship due to the lengthy fabrication period.

While waiting for the fabrication of the augmenter, testing was done on the lab-version of the NDEAA's Auto-Gopher drilling system. Extensive deep drilling tests were conducted and the data collected revealed issues that didn't present themselves in normal, shallower drilling tests. These results were used to identify a design flaw in the current bit design and formalize a new design that will allow for faster and more effective drilling by the Auto-gopher. These design changes can also be applied to new bit versions for the percussive augmenter as well.

The increased effectiveness of ultrasonic drilling over conventional, rotation-only drilling researched during the course of this internship will not only provide valuable new drilling methods that will increase planetary exploration capabilities but can also be used to increase the effectiveness of commercial drilling products for use in the construction industry as well.

V. Acknowledgements

This research was carried out at the Jet Propulsion Laboratory, California Institute of Technology, and was sponsored by the Undergraduate Student Research Program (USRP) and the National Aeronautics and Space Administration (NASA). Thanks to Dr. Yoseph Bar-Cohen for providing the opportunity to work on this project. Thanks to Dr. Mircea Badescu and Dr.

Stewart Sherrit for their patience and guidance, and all the members of the NDEAA lab who made this a wonderful opportunity.

VI. References

[1]Y. Bar-Cohen, S. Sherrit, B. P. Dolgin, X. Bao, Z. Chang, D. S. Pal , R. Krahe, J. Kroh, S. Du, T. Peterson, "Ultrasonic/sonic drilling/coring (USDC) for planetary applications," *Proceedings of SPIE's 8 of the Annual International Symposium on Smart Structures and Materials*, Mar. 2001.

[2]Y. Bar-Cohen and K. Zacny (Eds.), "Drilling in Extreme Environments - Penetration and Sampling on Earth and Other Planets," Wiley – VCH, Hoboken, NJ, ISBN-10: 3527408525, ISBN-13: 9783527408528, (July 2009) pp. 1-827

[3]Badescu, M., Sherrit, S., Bar-Cohen, Y., Bao, X. and Kassab, S., "Ultrasonic/Sonic Rotary-Hammer Drill (USRoHD)," NASA Patent - Patent # 7,740,088 , and the New Technology Report (NTR) Docket No. 44765 submitted on Dec. 19, 2006.

[4]Christopher Donnelly, Yoseph Bar-Cohen, Zensheu Chang, Mircea Badescu, and Stewart Sherrit, "Testing and Development of a Percussive Augmenter for Rotary Drills," NASA USRP Final report, Aug. 2011.

[5]J. Aldrich, Y. Bar-Cohen, S. Sherrit, M. Badescu, X. Bao, and J. Scott, "Percussive Augmenter of Rotary Drills (PARoD) for Operating as a Rotary-Hammer Drill," NTR Docket No. 46550, Submitted on September 11, 2008. US and International Patents were filed on Oct, 21, 2010.