JPL Protocol Technology Lab

Capabilities and Activities

Leigh Torgerson – 2/15/2011
Space Communications Networking Architect

Jet Propulsion Laboratory
California Institute of Technology
Pasadena, California

 Copyright 2010 California Institute of Technology. Government sponsorship acknowledged.

Outline

- PTL Tools – Hardware
- PTL Tools – Modeling Software
- General Simulation / Emulation Activities
- MACHETE Architecture and Sim capabilities
- FY10 Overview of PTL work
- Specific Project Examples

Copyright 2010 California Institute of Technology. Government sponsorship acknowledged.

PTL Assets

Computer Hardware

- Over 60 simulation/emulation computers (Linux/Windows); 3-port, on managed switch VLANs
- Flight computers (PPC 750) and FSW development environment
- Military-grade (USMC) DTN field-tested laptops
- Commercial Telemetry GS processors from RT Logic and Avtec
- Cisco routers / VPN Concentrators
- Constellation GSFC DSIL CA/IU units

Software / hardware protocol components

- CCSDS "reference" implementations tested as interoperable with ESA and others:
    - AOS, TM, TC, CFDP, IP/TM/TC
    - Testing new commercial implementations: Encap/AOS/TM/TC, SLE (CCSDS Orange book mods)
- Baseband Link channel emulators (delay up to 15 mins max, BER, FER, dynamic)
- DTN; ION and DTN2 implementations of BP, LTP, BSP
- FPGA Telemetry accelerator technology for CFDP and DTN
    - Includes Seakr P9 SSR emulator
- LDPC coders/decoders in firmware
- SCaN TDRSS hardware emulator (baseband – down to LDPC)

Simulation and Emulation

- Qualnet, MACHETE, SOAP and STK
    - numerous Deep Space and Near Earth models

Network Analysis & Simulation and Connectivity

- IXIA Optixia XM12 Network Traffic Analyzer / Generator
- Dedicated subnet (255 IPs) available
- "DMZ" IP addresses outside of JPL ILAN
- DTN Engineering Network (DEN)
- JPL Flight System Testbed (DINET / EPOXI at present)
- Symmetricom GPS IRIG/NTP Stratum 1 Time Server with Rubidium Clock

Copyright 2010 California Institute of Technology. Government sponsorship acknowledged.

PTL Simulation Emulation / Prototyping

Full End-to-End Comm system testbeds…

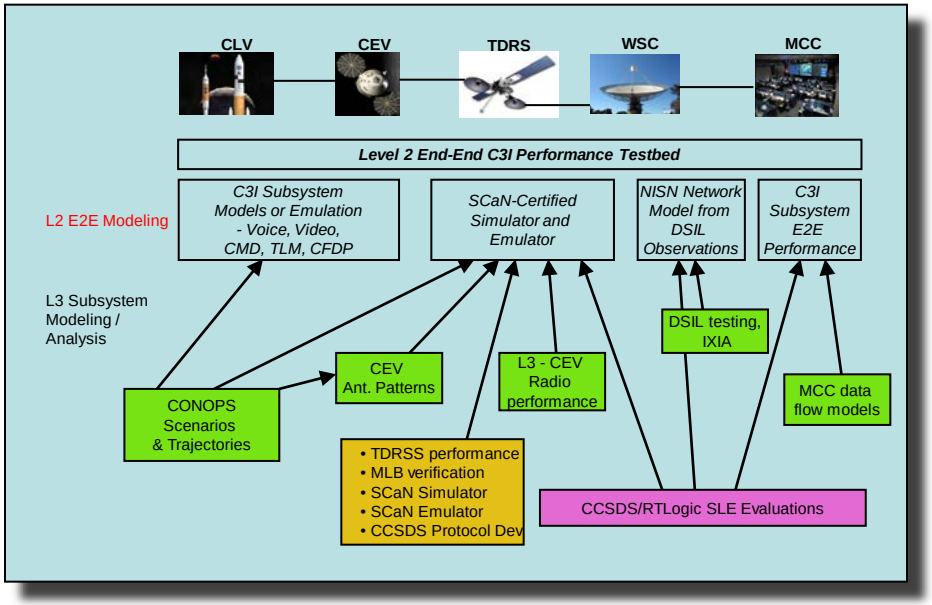

Qualnet DTN modeling with **MACHETE**, tested against field implementations of DTN… (real time HWIL tests)

MCTSSA Qualnet model

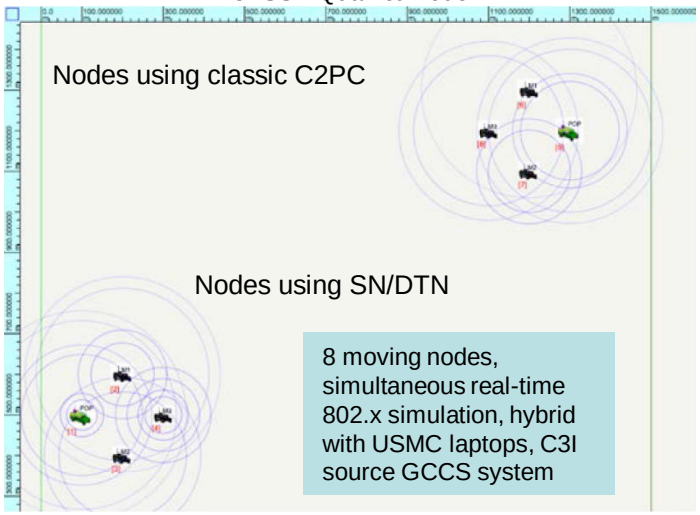

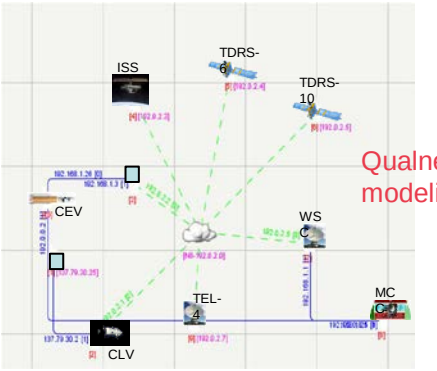

Qualnet Earth-orbiting systems modeling…

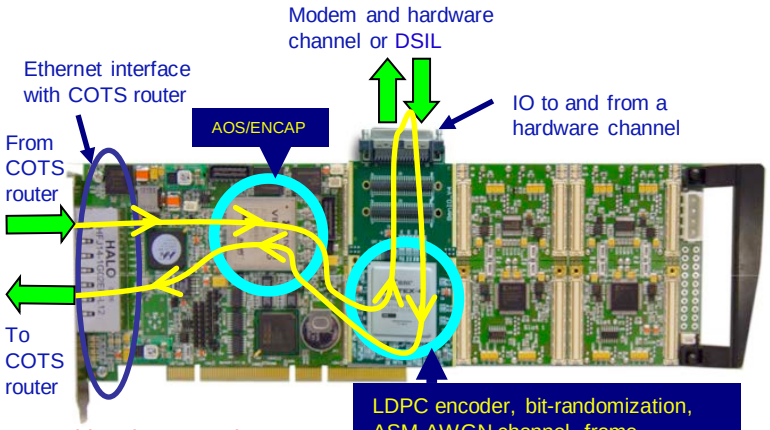

Hardware protocol implementation…

Copyright 2010 California Institute of Technology. Government sponsorship ack

MACHETE Architecture

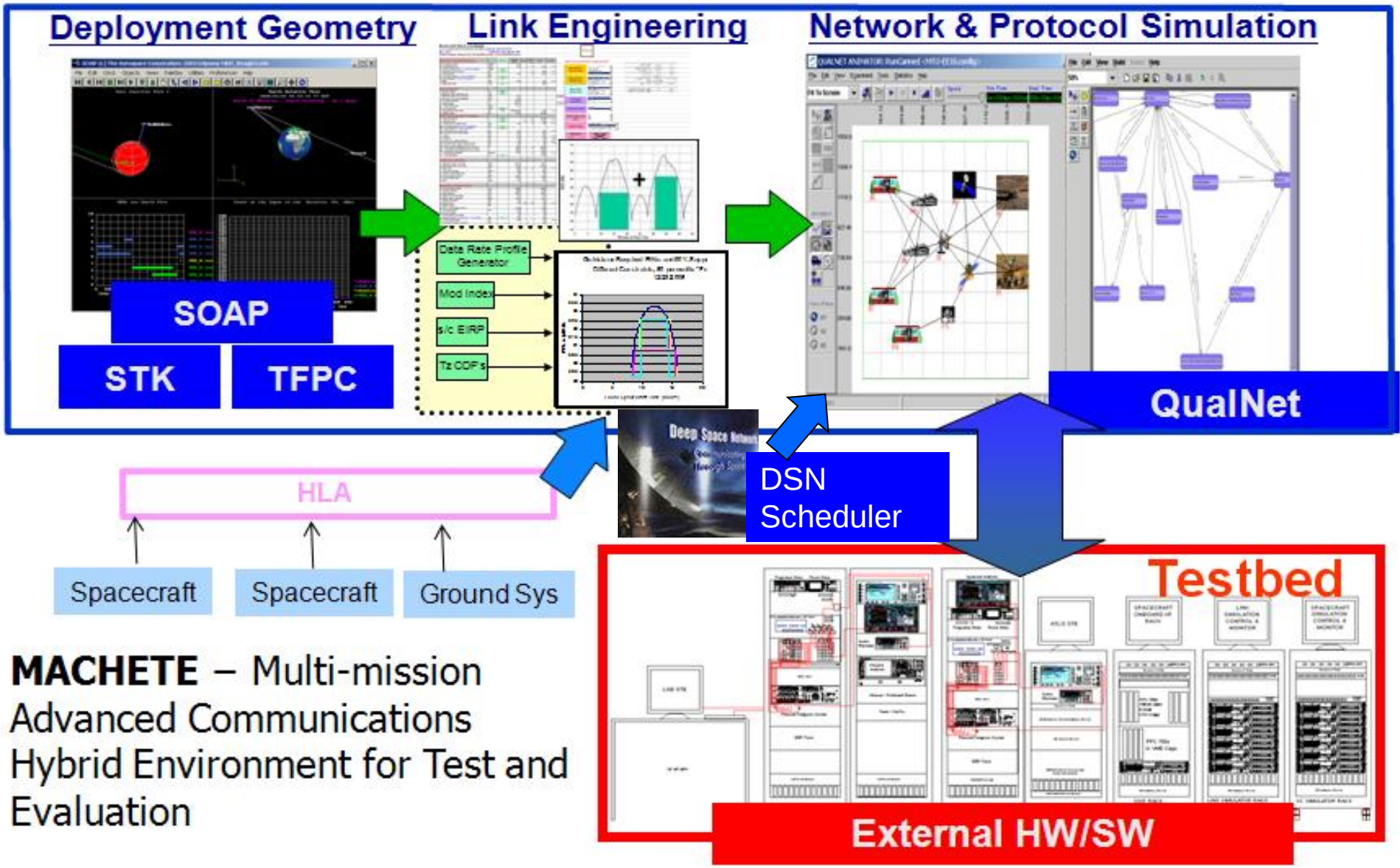

MACHETE – Multi-mission Advanced Communications Hybrid Environment for Test and Evaluation

Copyright 2010 California Institute of Technology. Government sponsorship acknowledged.

MACHETE Modeling Capabilities

- Test & evaluation environment for hybrid hardware/software emulation/simulation which integrates:
  - Custom tools & libraries
    - CCSDS Protocol Library (extension to QualNet)
    - DTN Protocol Library (extension to QualNet)
    - Additional ESMD C3I protocols (extension to QualNet)
    - Link budget libraries (C, Matlab)
    - Telecomm link analysis tools (TFPC, TOAST)
  - Commercial tools
    - QualNet and IP Network Emulator (IPNE)
    - Satellite Took Kit (STK)
    - Satellite Orbit Analysis Program (SOAP)
    - IEEE 1516 High Level Architecture (HLA)
  - Case Study Scenarios
    - numerous Mars single link and multiasset relay scenarios
    - full compliment of Near Earth scenarios (Constellation, ISS)
    - Sensor network data fusion
    - Military tactical edge communication
  - Custom Traffic Models
    - DSN, TDRSS
  - Custom Protocol Models
    - DTN suite (AMS, BP, LTP)
    - CCSDS (CFDP, AOS, TM, TC, Prox-1)
    - ESMD (DEM, RTP

Copyright 2010 California Institute of Technology. Government sponsorship acknowledged.

PROTOCOL TEST LAB ACTIVITIES IN FY10

SCaN DTN Readiness Project

- Deep Impact Flight Experiment
- DTN Experimental Network:
  - connected with GRC, GSFC, APL, JSC, MSFC, Colorado University at Boulder and the International Space Station
- Lunar Surface Systems demos for Desert Rats, DTN-enabled video for Athlete

FY10 Deep Space Mission Systems Technology

- DSN Networking Infusion
- NTP development
- Space Networking Testbed
- JPL R&D for protocols
- Hybrid Simulation Environment

Communications Architectures and Research Section

Space Communications Networking Group

NASA Data Standards Program
Protocol testing and development:
- AMS/RAMS development
- CFDP Lite Development
- Proximity Link 1
- CCSDS Networking Area Support
- RTLogic/SLE/Encap collaboration
- CCSDS Interoperability Testing

DARPA DTN Phase 3
Core engineering support for DARPA DTN program

- IETF Standardization support
- Phase 3 pre-transition tests; Field testing DTN
- Marine Corps Tactical Systems Support Activity (MCTSSA) lab testing of DTN enabled satellite gateways and mobile C3I system

ESMD/Constellation Support

- C3I L2 Comm Requirements Validation Modeling/Simulation
  - Study Support wit Qualnet modeling (MACHETE)
  - Network architecture for multiple landed and orbital assets
- Full Constellation Stack demonstrated for for VoIP, H264 video

Copyright 2010 California Institute of Technology. Government sponsorship acknowledged.

NASA Disruption Tolerant Networking (DTN) Readiness Program

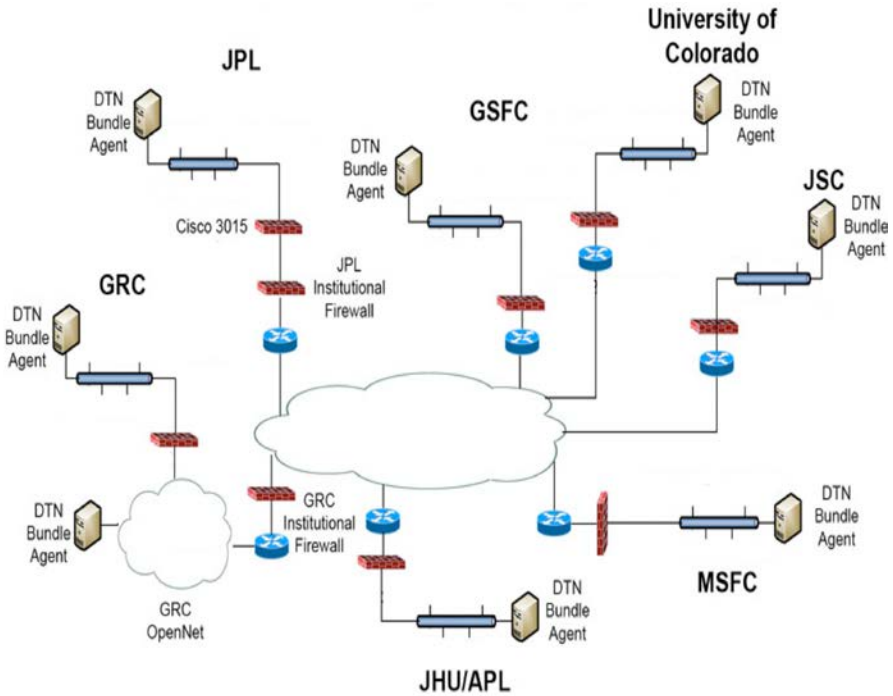

Disruption Tolerant Networking Experimental Network (DEN)

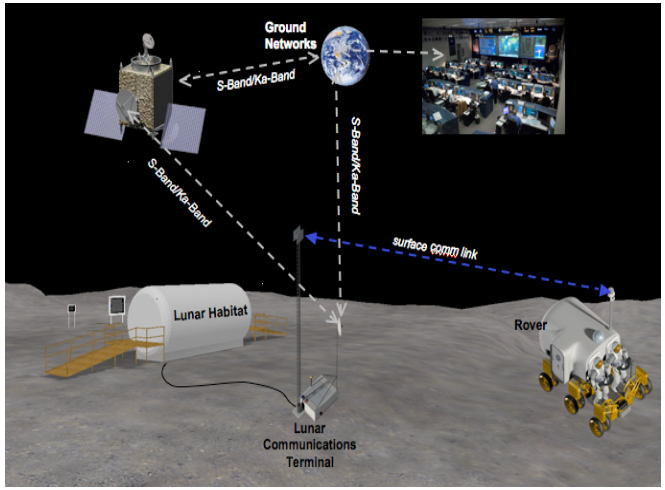

Multicenter Lunar Surface Systems DTN comm prototyping with other DEN participants

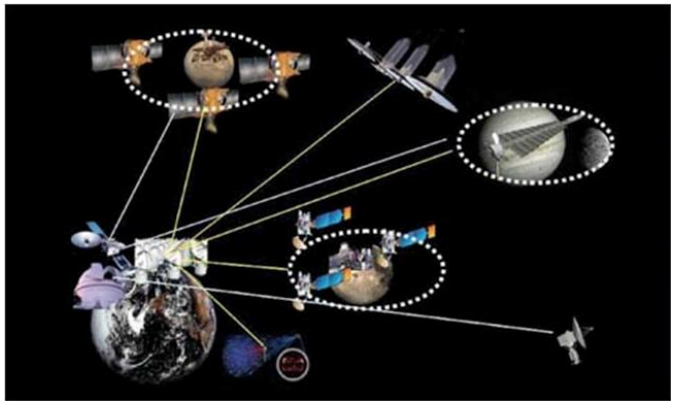

Multicenter Deep Space DTN space internetworking prototyping with other DEN participants

Copyright 2010 California Institute of Technology. Government sponsorship acknowledged.

Deep Impact Network Experiment
Experiment Operations Center in PTL

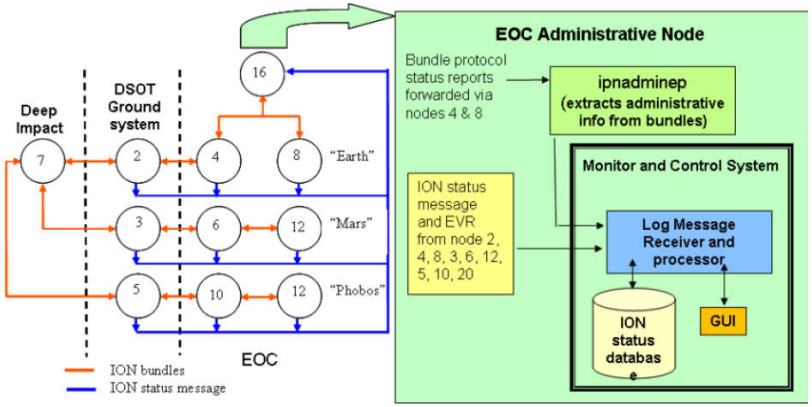

http://www.youtube.com/watch?v=lQzjUvn_hWY

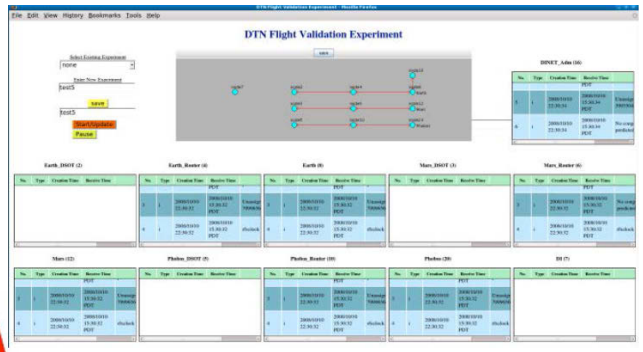

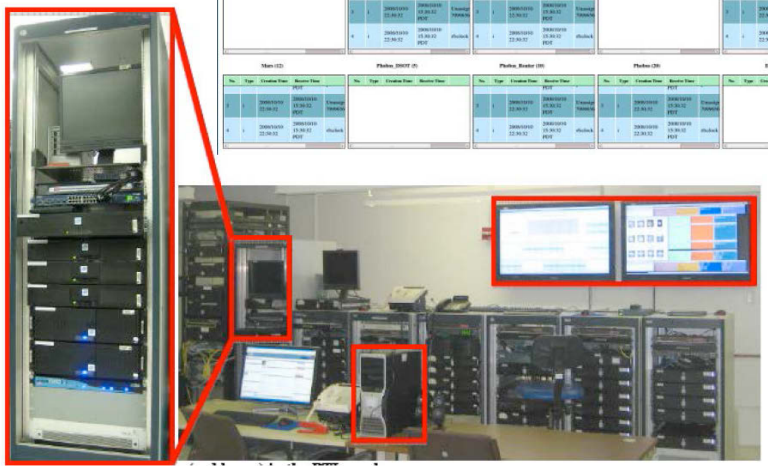

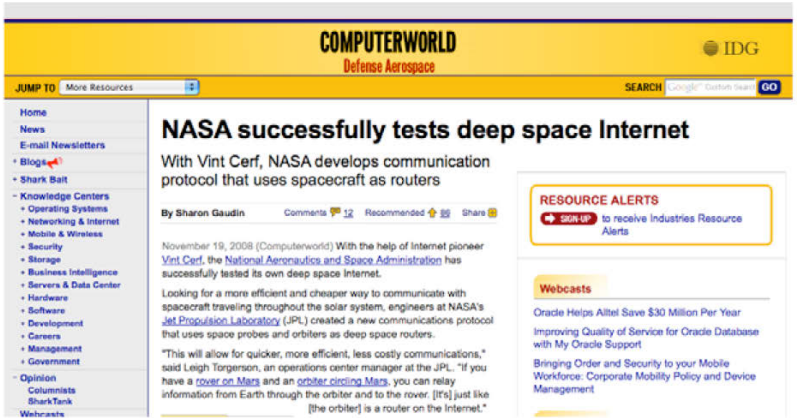

Copyright 2010 California Institute of Technology. Government sponsorship acknowledged.

Preparing DTN for Operational Use

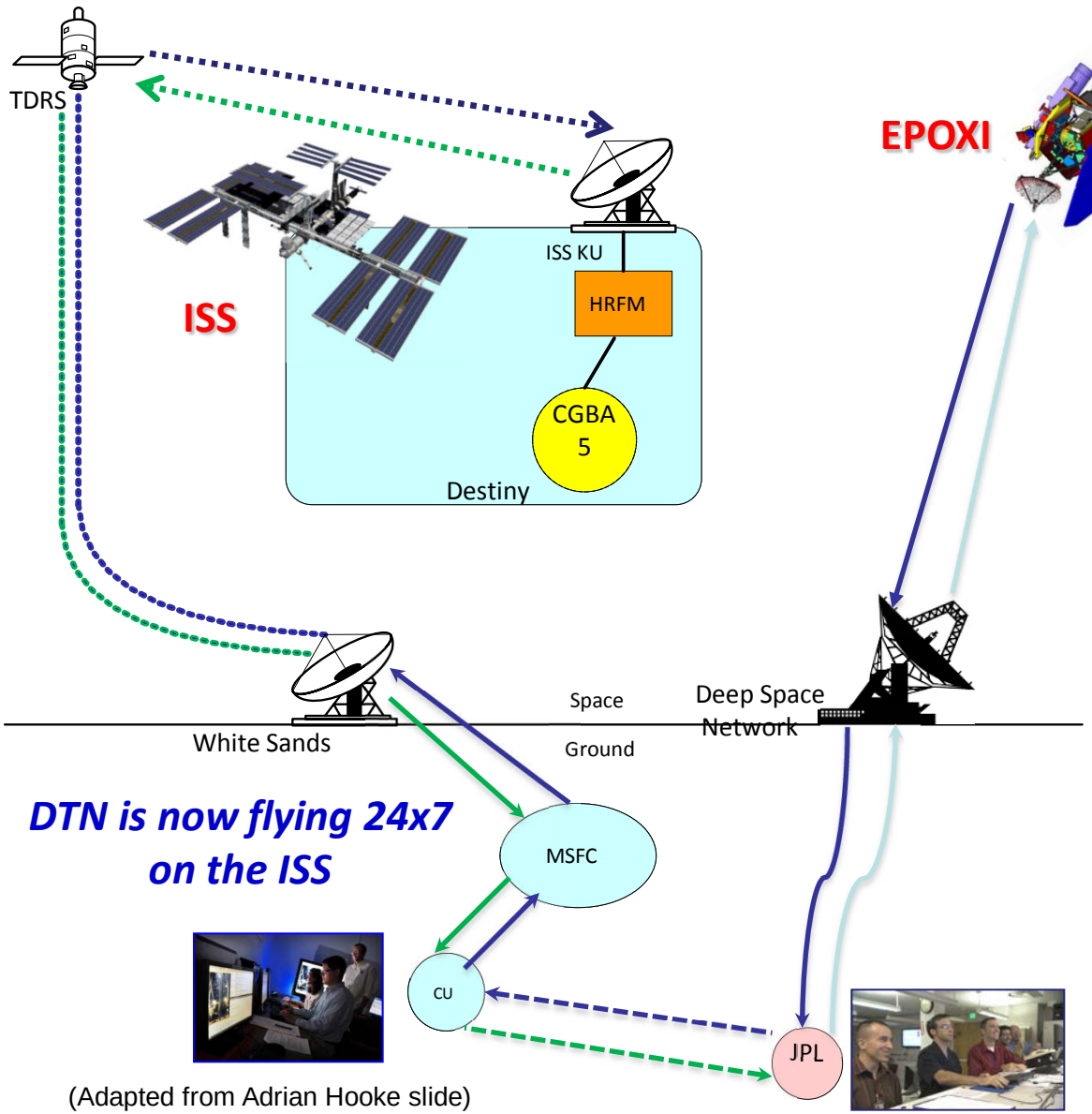

DTN is now flying 24x7 on the ISS

(Adapted from Adrian Hooke slide)

October 2008: "DINET-I" First fully automatic DTN flight test on Deep Impact/EPOXI in deep space

- *Operated over signal propagation delays of 49 to 81 seconds; end-to-end latencies on the order of days were tolerated.*
- *Station handovers and transient failures in DSN uplink service were handled automatically and invisibly.*
- *Moved 292 images (about 14.5 MB) through the network.*
- *No data loss and no data corruption anywhere in the network, despite several transient unanticipated lapses in service at Deep Space Network (DSN) stations during tracking passes*

- ***End of 2010: DINET-II Flight validation on EPOXI in deep space in flight configuration***
  - *Validate additional DTN functionality (security, DTN-enabled CFDP, multiple priority levels)*
  - *Flow Bundles to DTN nodes outside of JPL (to the ISS)*
- ***End of 2011: DINET-III Flight validation of DTN for use in extended mission***
  - *Validate additional DTN security functionality (payload integrity, payload encryption)*
  - *Transition DTN operational network control software to EPOXI flight ops team*

Copyright 2010 California Institute of Technology. Government sponsorship acknowledged.

Leigh Torgerson