Deployable Extravehiclar Activity Platform (DEVAP) for Planetary Surfaces

A. Scott Howe, PhD[1]
Jet Propulsion Laboratory, California Institute of Technology, Pasadena, California 92397

Jerad Merbitz[2]
NASA Kennedy Space Center, Florida 32899

and

HDU Management Team[3]

The Deployable Extra-Vehicular Activity Platform (DEVAP) is a staging platform for egress and ingress attached to a lunar, Mars, or planetary surface habitat airlock, suitlock, or port. The DEVAP folds up into a compact package for transport, and deploys manually from its attached location to provide a ramp and staging platform for extra-vehicular activities. This paper discusses the latest development of the DEVAP, from its beginnings as a portable platform attached to the Lunar Outpost Pressurized Excursion Module (PEM) in the Constellation Lunar Surface Systems scenarios, to the working prototype deployed at the 2011 NASA Desert Research and Technology Studies (D-RATS) analog field tests in Arizona. The paper concludes with possible future applications and directions for the DEVAP.

Nomenclature

DEVAP	=	Deployable Extravehicular Activity Platform
DSH	=	Deep Space Habitat
D-RATS	=	NASA Desert Research and Technology Studies
EVA	=	Extra Vehicular Activity
LER	=	Lunar Electric Rover
LSS	=	Lunar Surface Systems
PEM	=	Pressurized Excursion Module

I. Introduction

HABITAT pressure vessels are generally designed to be as structurally efficient as possible to save mass, by conforming to curvatures and contours that optimize the tensile strength of the material making up the primary structure wall. Whenever a port or penetration is needed in the wall of the pressure vessel, the location is dictated by the areas of least tensile strain, and in such a way that allows the port to be constructed the most efficiently with minimal mass penalty. Ingress / egress ports therefore tend to be higher up on the side of the volume, rather than close to the ground where it would be convenient for suited crew members to step out onto the planetary surface. A platform, stair, and / or ramp structure is needed to allow crew members to descent from the high location of the egress / ingress port down to the planetary surface. The egress structure must be portable, of minimal mass, easy to transport and deploy, and adjustable to variations in the natural terrain.

[1] Space Architect, Senior Systems Engineer, a.scott.howe@jpl.nasa.gov
[2] jerad.c.merbitz@nasa.gov
[3] At the time of this project, the Habitat Demonstration Unit (HDU – now Advanced Exploration Systems AES Habitation Systems Project) management team consisted of Kriss Kennedy, JSC; Tracy Gill, KSC; Terry Tri, JSC; Sotirios Liolios, JSC; Amanda Lynch, JSC; and Edward Walsh, JSC.

II. Origins – Lunar Outpost

The Constellation Lunar Surface Systems outpost (Figure 1) scenario studies defined nominal egress / ingress functions to be via suitports on the back of Lunar Electric Rovers (LER). Infrequent alternative egress / ingress capability (Figure 2) for emergency and maintenance purposes were defined using one of the habitat pressure ports (Howe, Spexarth, Toups, Howard, Rudisill, Dorsey 2010). The maintenance Extra-Vehicluar Activity (EVA) functions were to use a relocatable inflatable airlock and foldable EVA porch as shown in Figure 2.

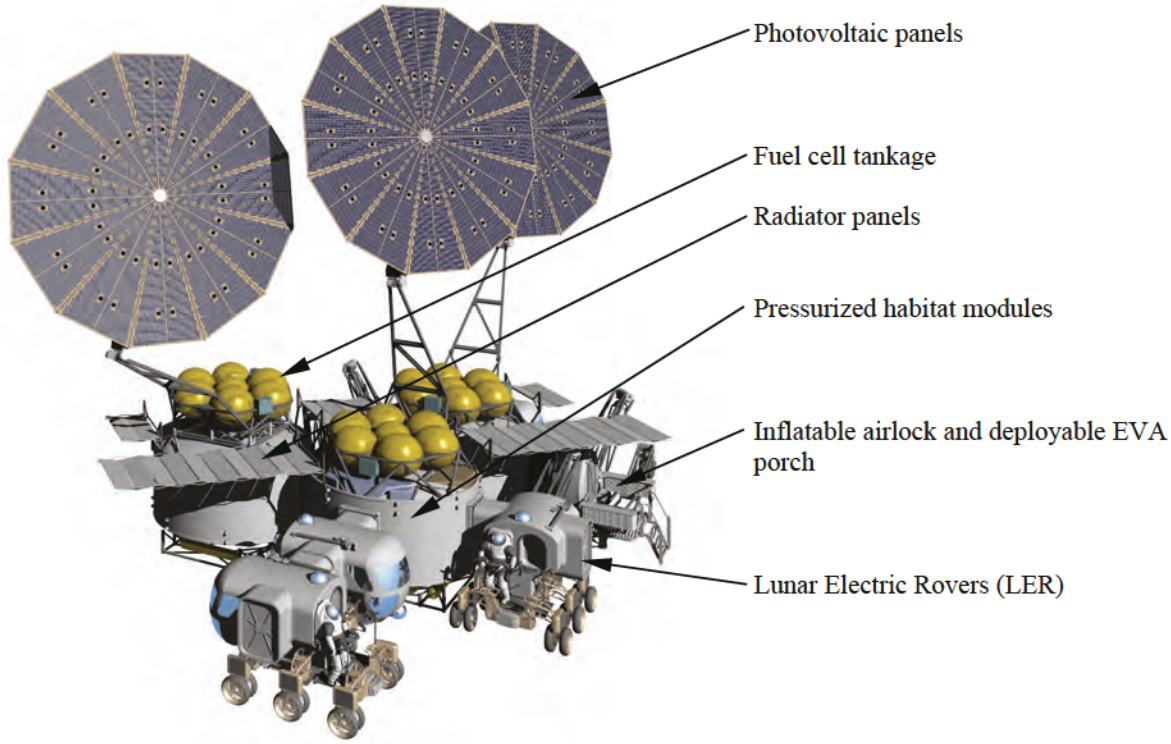

Figure 1: Constellation Lunar Surface Systems Scenario 12.1 lunar outpost

To demonstrate technologies and features of the LSS lunar outpost, the Habitat Demonstration Unit team decided to build a prototype of a single module of the outpost, that could be used in NASA Desert Research and Technology Studies (D-RATS) analog mission scenarios in the Arizona desert. One lunar outpost operational scenario called for a single module that would support a pair of LER rovers in overland exploration. This module was named the Pressurized Excursion Module (PEM), and included maintenance and emergency EVA capability in the form of an inflatable airlock and porch. Early conceptual work on the EVA capability is shown in Figure 3, where the Deployable EVA Platform (DEVAP) gradually evolved out of concepts for a portable Dual Chamber Inflatable Suitlock (DCIS) described in Howe, Kennedy, Guirgis, and Boyle (2011).

The PEM was constructed during the 2010 D-RATS simulated mission analogs. A small airlock module of a similar volume to the target inflatable airlock was also constructed. A low-fidelity porch and ramp leading into the airlock provided minimal working area outside the airlock door. However, the ramp leading up to the porch was at a fairly steep angle, which made it difficult for some people to walk up the ramp even with use of the handrails.

During the collaboration and design phase for the 2011 D-RATS, the team decided to focus on a new technology that would provide a much larger work area outside of the airlock and a shallower ramp to allow easier access to the surface. In addition to a larger porch and ramp, the team desired to have EVA work porch be deployable, just as it would need to be on a lunar surface. Funding for the design and construction of the DEVAP unit (Figure 4 and Figure 5) was secured whereupon manufacture and construction of the unit began at Kennedy Space Center. However, during this time the shift of mission priorities moved away from lunar surface outposts and instead began to focus on Deep Space Habitats (DSH) for missions to Near Earth Asteroids (NEA) or as a transit vehicle to Mars. Since the DEVAP was already under development, and the need for an EVA porch in the mission scenarios had been removed, it was decided that a functional DEVAP that could be stowed and deployed would still be necessary to support moving operations in the field during the 2011 D-RATS activities.

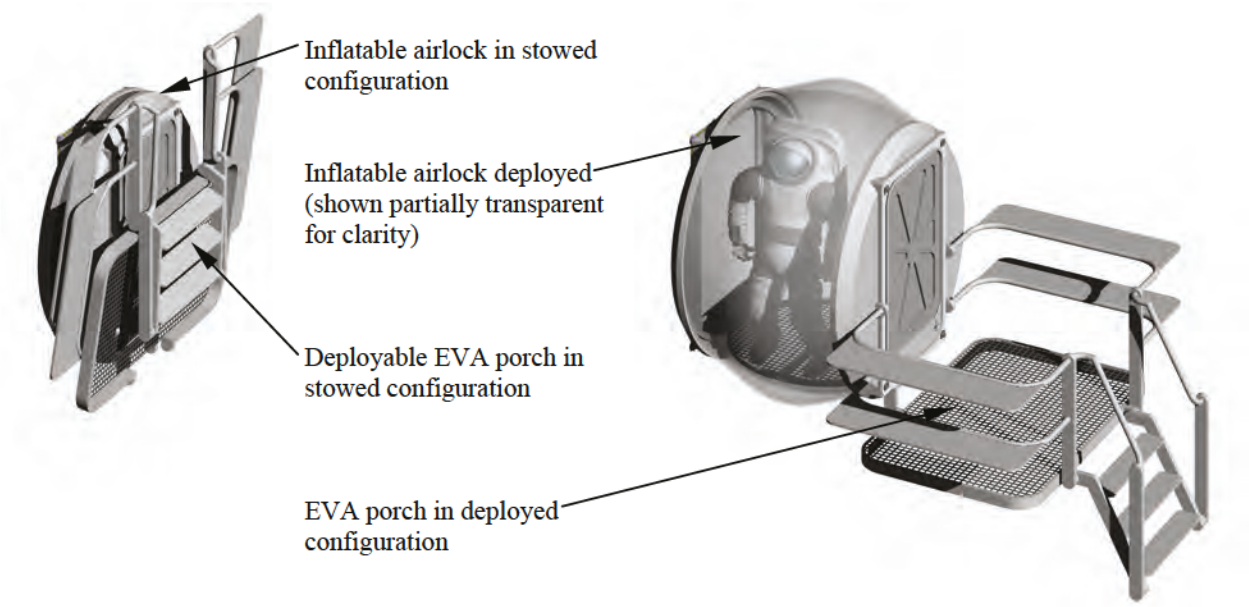

Figure 2: LSS Scenario 12.1 deployable arlock and EVA porch

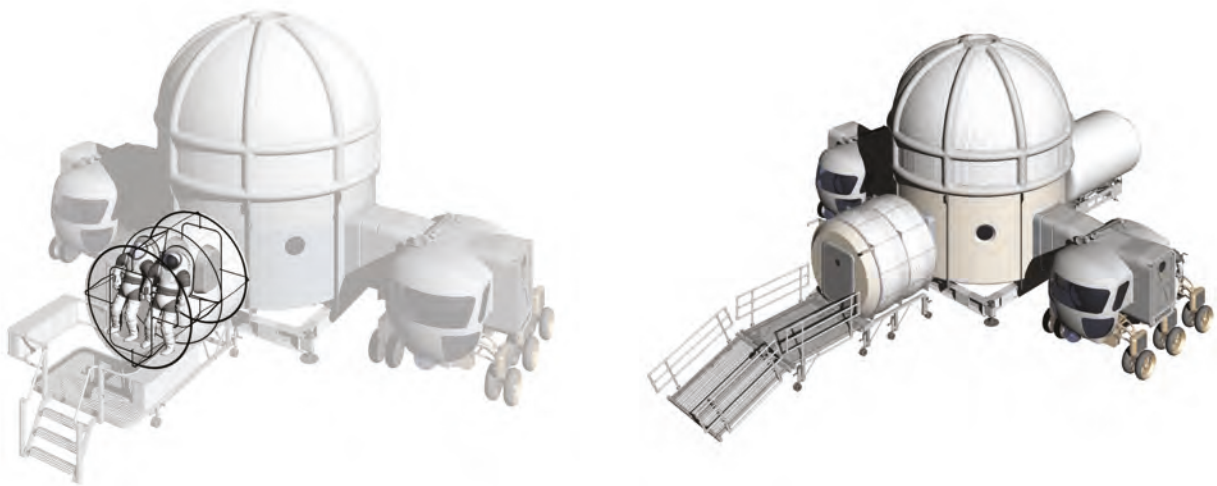

Figure 3: Early DEVAP studies showing EVA platform attached to inflatable suitlock (left), and DEVAP / suitlock on HDU (right)

III. DEVAP Concept

The purpose of the DEVAP is to provide a stowable / deployable (Figure 5) staging platform and ramp that will allow crew members to ingress / egress from an airlock, suitlock, or other port on the habitat, down to the planetary surface in a safe, efficient manner. At the beginning of the DEVAP project, the EVA Porch design team at KSC was given the following requirements:

- Shall interface with defined Suitlock EVA bulkhead structural interfaces
- Shall employ weight-relief measures to enable stowed assembly to be manually deployed by two persons without exceeding human factors limits

- Shall employ weight-relief measures to enable deployed assembly to be stowed manually by two persons without exceeding human factors limits
- Shall employ a latching mechanism which secures EVA porch in stowed position such that the porch can be unlatched by a person from ground level
- Shall employ a latching mechanism which will automatically latch to secure EVA porch in stowed position as the porch is being manually stowed
- Shall have one or more lifting lugs to permit lifting of the EVA porch by crane
- Shall have one or more lifting lugs to permit lifting of the EVA porch and suitlock together as a single unit by crane in tandem with the suitlock lifting lug(s)
- Shall employ suitable gratings on main deck and ramp to permit sand, dirt, and dust to fall freely to the ground beneath
- Shall be constructed to specified dimensions, with a tolerance of +/- 0.5 in.
- Shall support a load of 100 lbs./sq. ft. on the Main Deck and Ramp

The overall porch design was to meet area and weight requirements set forth by the HDU team and mentioned above. The team took weight into consideration and made all the design modifications possible to minimize the weight without compromising the structural stability of the porch. The entire structure of the EVA porch is made of aluminum and the grating used to for the deck and ramp is fiberglass. The main elements of the porch consist of the main deck, ramp, lighted handrails (supporting nighttime activities), and an electric hoist for assistance during deployment and stowage supporting relocation and EVA activities.

The DEVAP consists of a fixed mounting frame that remains permanently attached to the ingress / egress port of the habitat, a deployable subframe that hinges off the mounting frame and folds down to self-level itself on the planetary surface, and a multi-sectional deck with folding handrails that folds down to rest on the secured subframe to become a level porch with adjustable ramp.

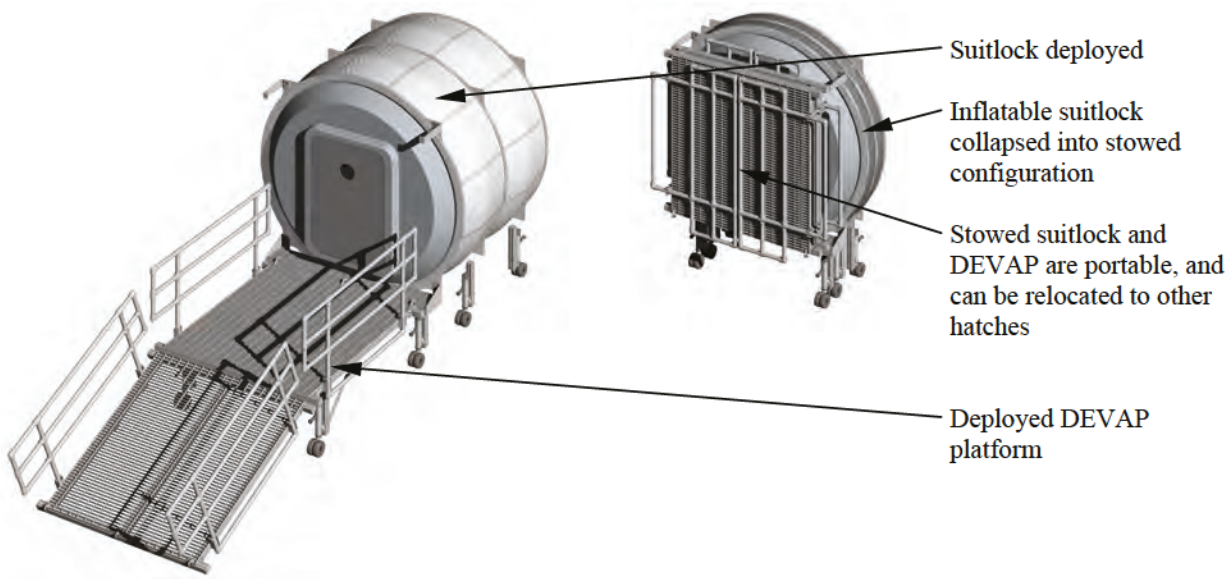

Figure 4: DEVAP portable and relocatable with inflatable suitlock, deployed (right), and stowed (left)

From the stowed position, the depth of the porch is approximately 4 feet. There are safety chains and lock pins that hold the fold down support beam in plan. When the deployment process begins, the lock pins are removed and the support structure is folded down. One or two people can perform this activity as the beam has hydraulics to assist in deployment and stowage.

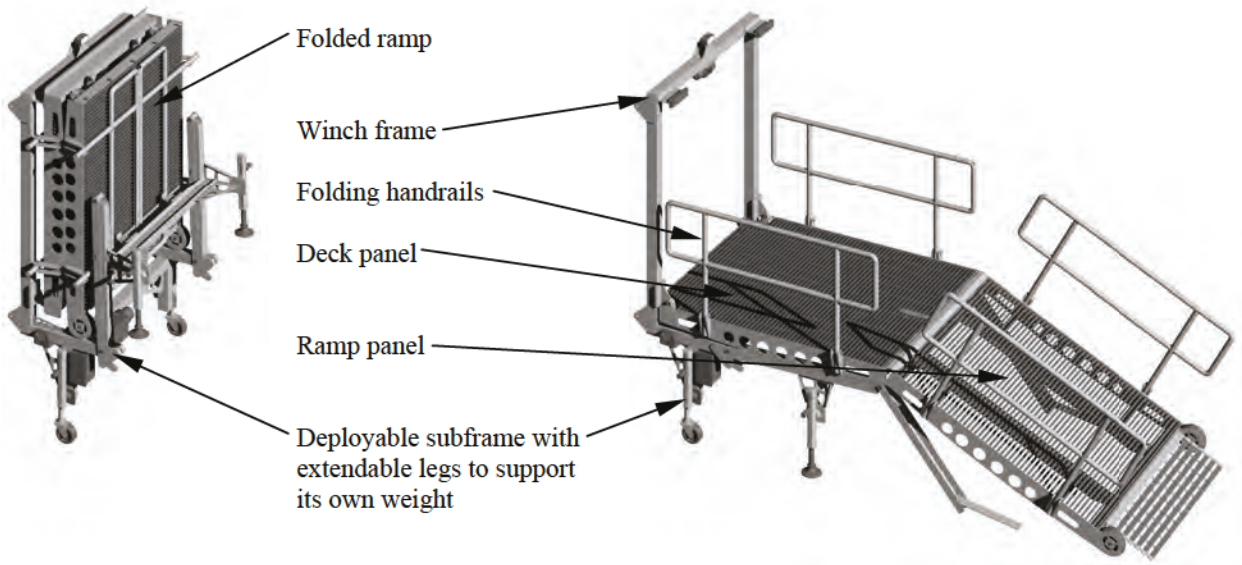

Figure 5: Deployable Extravehicular Activity Platform (DEVAP) in stowed configuration (left), and deployed configuration (right)

A. Deployment and Operation

The operation of the DEVAP begins from the stowed configuration (Figure 7) with the lowering of the deployable subframe (Figure 8). Once the subframe is lowered, the supporting legs are adjusted to conform to deviations in the natural terrain -- the subframe will then transfer all moment forces of the deploying deck through itself to the ground, rather than through the habitat wall.

Once the base support structure is deployed, the primary and secondary ramps are then folded down to support deployment of the porch by guiding the wheels of the ramp down to the surface at an angle optimized to prevent the wheels from digging into the soil. Once the primary and secondary ramps are deployed, the operator of the hoist then ensures the area around the porch is clear with no obstructions, at which time deployment can begin. The hoist operation is powered by an XT15 Extreme Terrain ATV winch (12VDC powered by a battery). Next the multi-sectional deck is unfolded with the help of the winch (Figure 9), with the section nearest to the ingress / egress port remaining as a level porch, and the subsequent sections allowed to slope down to the planetary surface (Figure 10).

After all decks have been secured (Figure 11), handrail deployment occurs next, which involves removing the locking pushpins, raising the handrails, and reinstalling the pushpins (Figure 6) to keep the handrails in their operating configuration (Figure 12). After completion of the handrail deployment, chains are used to connect the upper handrails to the lower handrails. The next activity is deployment of the step down ramp, located at the bottom of the porch ramp, which is done by simply flipping it over to bridge the gap between the ramp and the surface.

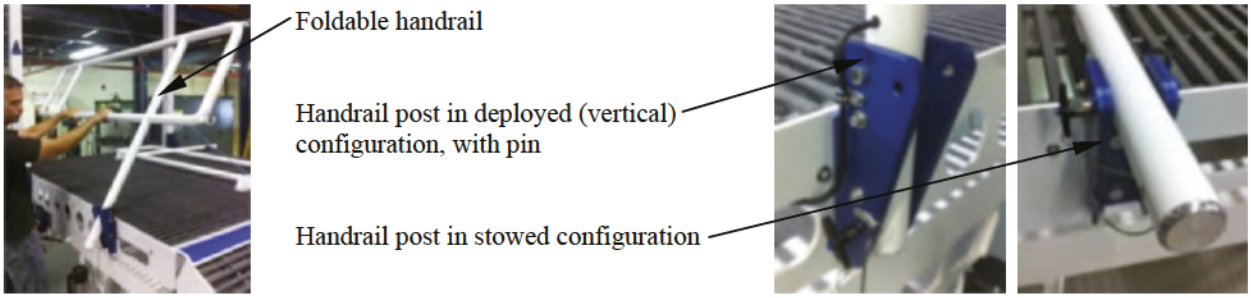

Figure 6: DEVAP foldable handrail hardware

When access to the ramp has been established for safe operation, the hoist hook is removed and reeled back onto the spool of the hoist for stowing. At that point in time, the ramp can be used for DSH activities. For night activities, the light switch located on the left side of the frame that attaches the porch to the airlock, can be flipped to the ON position, which illuminates the LED Luminrails located on the bottom of the handrails. These lights provide visible

work environment during nighttime DSH activities. Suited crew members can use the platform to ingress / egress the habitat, stage for EVAs, prepare tools, and remove dust from environmental suits (Figure 13).

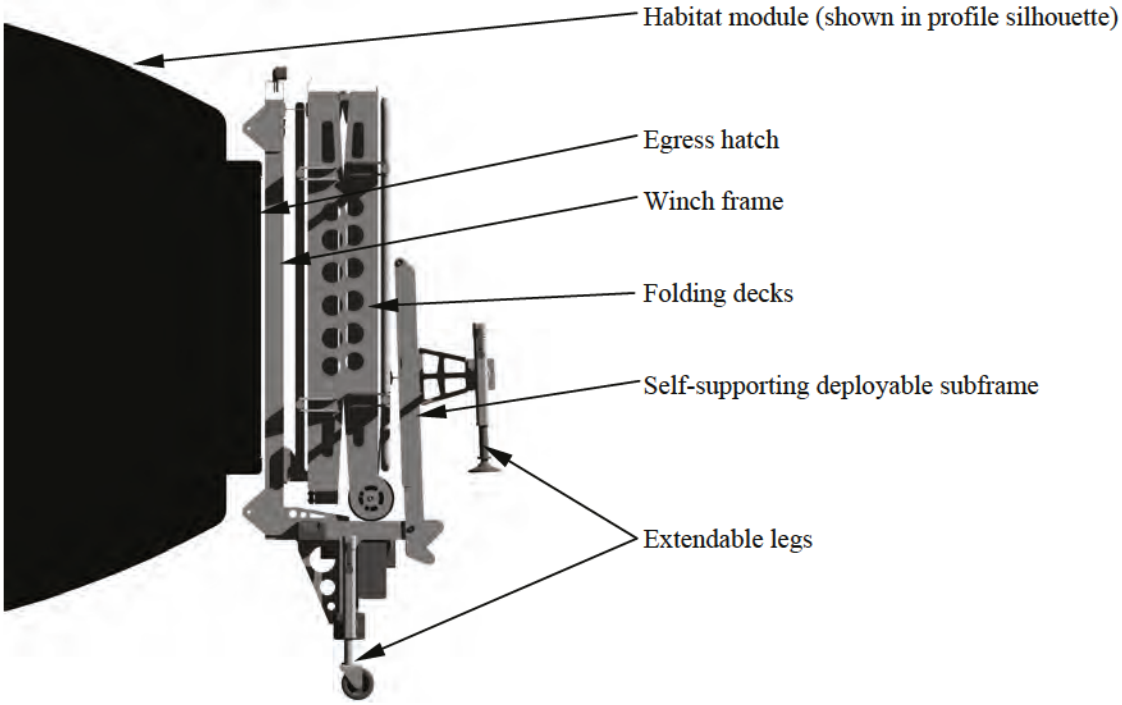

Figure 7: DEVAP deploy sequence step 1 -- stowed configuration

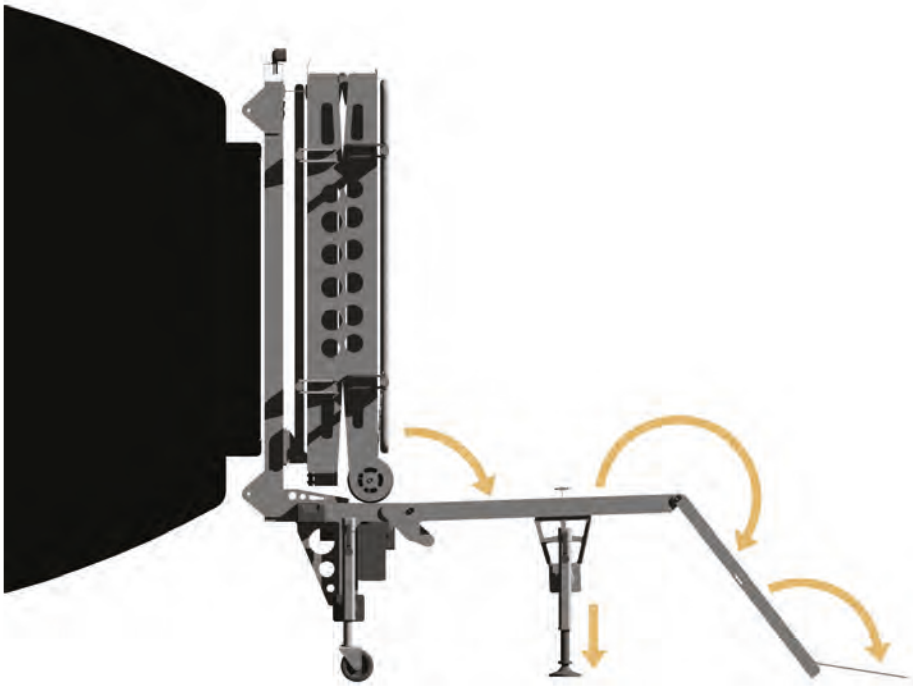

Figure 8: DEVAP deploy sequence step 2 -- self-supporting subframe is deployed, extendable legs are extended to match terrain, and helper rails are deployed into place

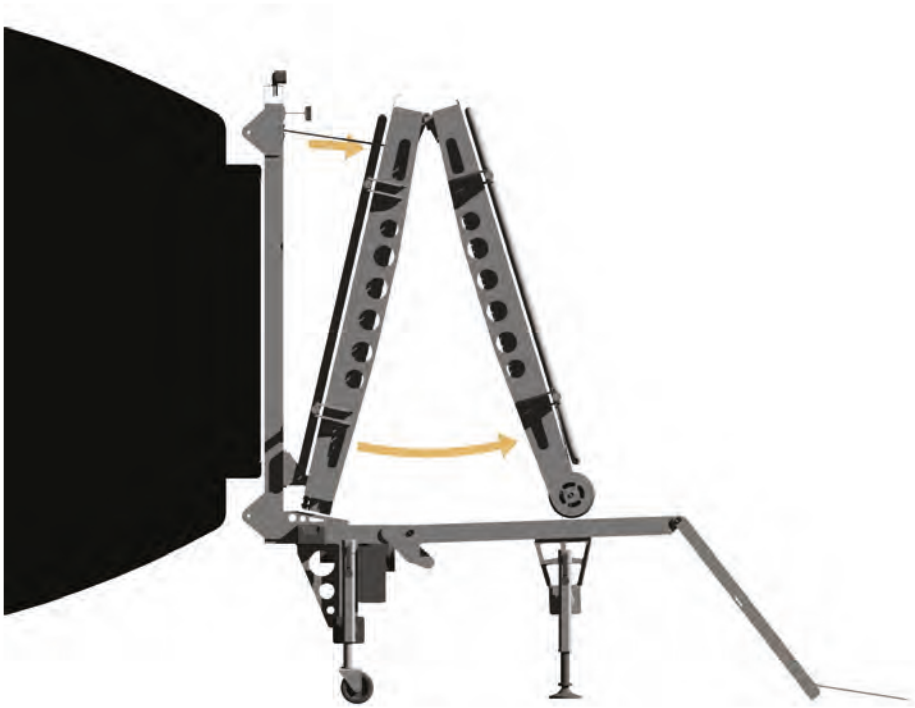

Figure 9: DEVAP deploy sequence step 3 -- use winch to ease folding deck ramps along subframe rail

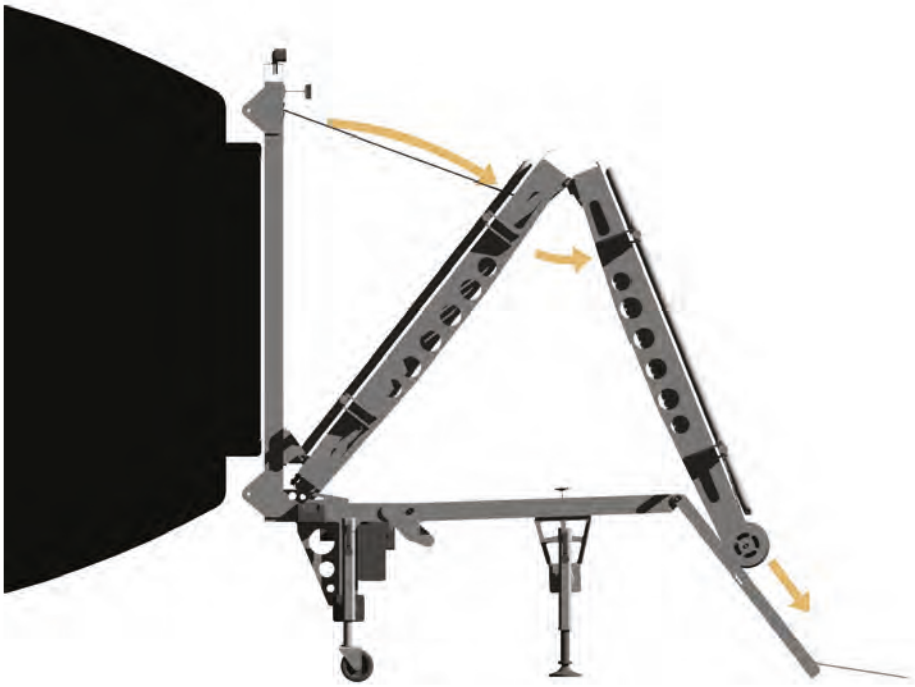

Figure 10: DEVAP deploy sequence step 4 -- continue easing folding deck ramps down helper rails

Figure 11: DEVAP deploy sequence step 5 -- situate foldable deck ramps onto terrain, and deploy transition plate

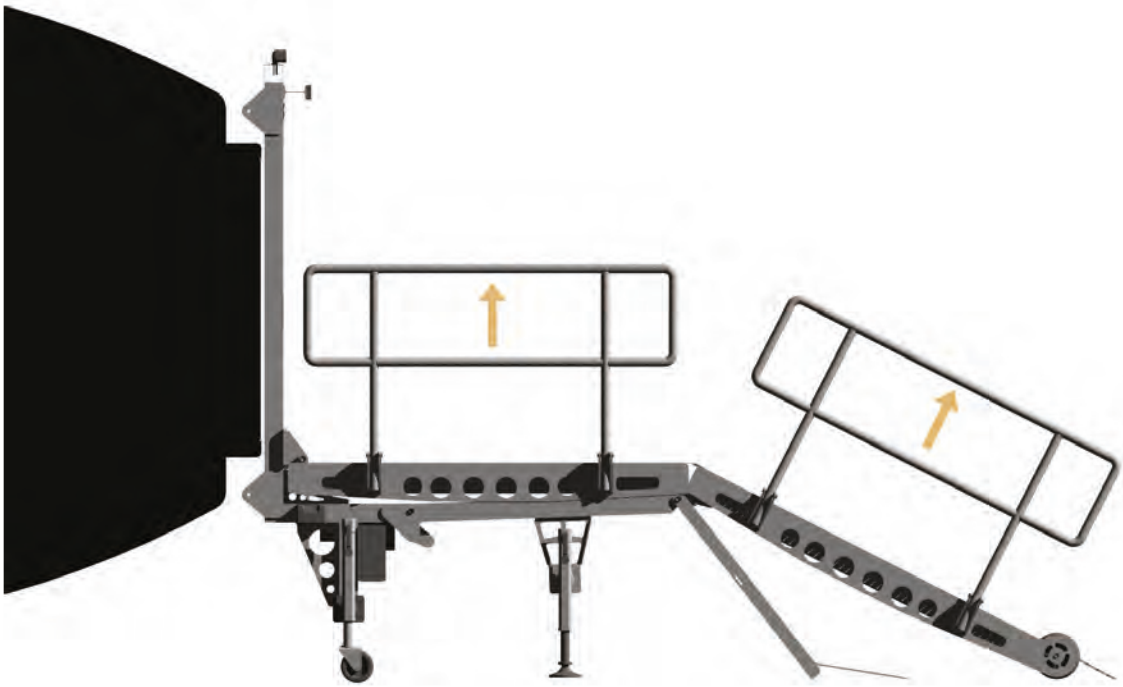

Figure 12: DEVAP deploy sequence step 6 -- disconnect and rewind winch, deploy handrails

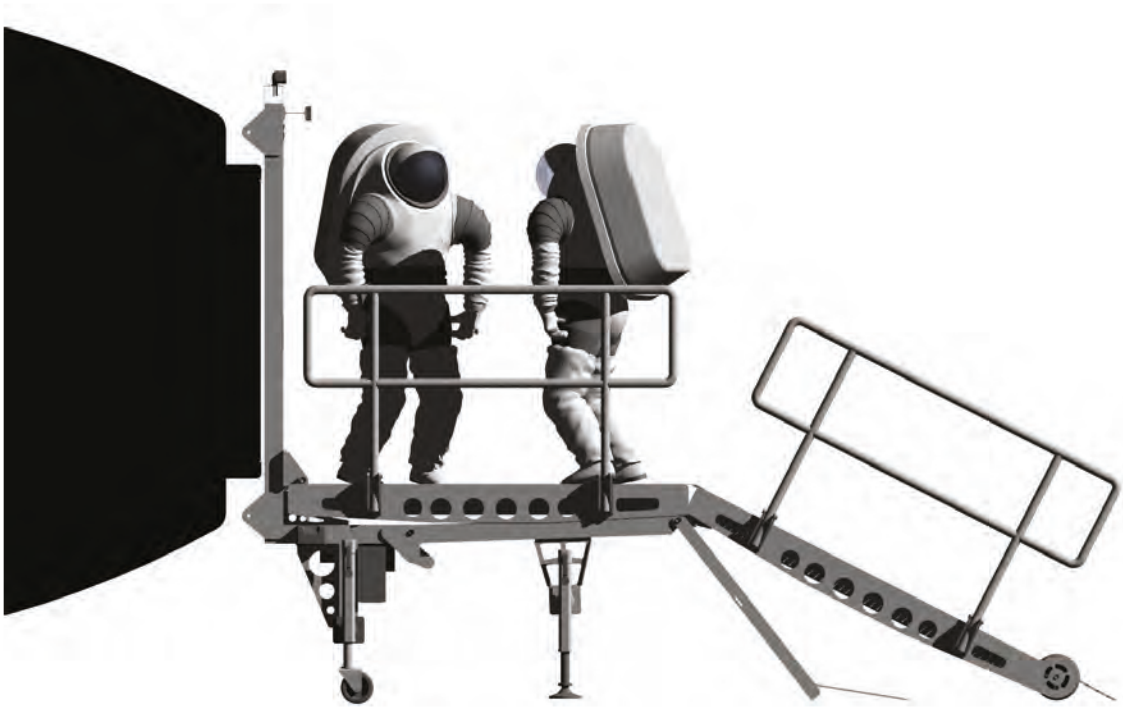

Figure 13: DEVAP deploy sequence step 7 -- platform is in deployed configuration ready for use by EVA crewmembers

B. Versions

Various versions of the DEVAP include: "bi-sectional" which has only two deck sections (one level porch and one ramp); "tri-sectional" which has three deck sections (one level section, two ramp sections); "manual" EVA deployment by suited crew members of either bi-sectional or tri-sectional types using electric winch and hand tools; and "automated" remote or automated deployment of either bi-sectional or tri-sectional types using actuators without the need of suited crew members.

The platform is designed according to ergonomic standards for ramp slope and handrail height. Deck structure and subframe are designed according to structural loads within a gravity field while in use, and for launch loads while stowed. Peripheral equipment varies depending on the type, and includes electric winch, actuators, adjustable legs, devices for easy deployment, and adjustable gap fillers to minimize obstructions in walking path at joints and transitions.

The DEVAP system is designed to be robust in a highly abrasive, lunar dust environment, and to protect the ingress / egress port as much as possible from dust incursion. Joints and components on flight versions of the DEVAP will be designed to be particularly reliable under these conditions.

C. Novel Features

Novel and unique features of the DEVAP include: compact stowage configuration; self-supporting resolution of moment forces during deployment; ample deck area for EVA staging; access directly to the planetary surface with smooth transitions. Advantages of innovation include: lightweight / low mass folding structure; portability.

Development concerns include: resolution of ramp lengths and sections to result in appropriate ramp angles on a variety of natural terrain; automation or remote operation of deployment / stow sequence.

IV. Operational Prototype

Various version of an EVA ramp have been used on the Habitat Demonstration Unit Deep Space Habitat (HDU-DSH) during the NASA Desert Research and Technology Studies (D-RATS) field tests (Kennedy, Gill, Tri, Howe 2010; and Kennedy, et.al. 2011). A bi-sectional ramp DEVAP design was manufactured and implemented in D-RATS 2011, leading to several lessons learned. Due to the shift in emphasis from a lunar surface to a Deep Space Habitat, no official EVA activities occurred during the D-RATS 2011 mission tests. Therefore, all functionality, tests, and feedback came within a one-g Earth analog concept for ground operations only.

Figure 14: Habitat Demonstration Unit Deep Space Habitat (HDU-DSH) at NASA D-RATS 2011, showing the DEVAP unit in the deployed configuration on the left

Figure 15: DEVAP operational prototype in deployed configuration.

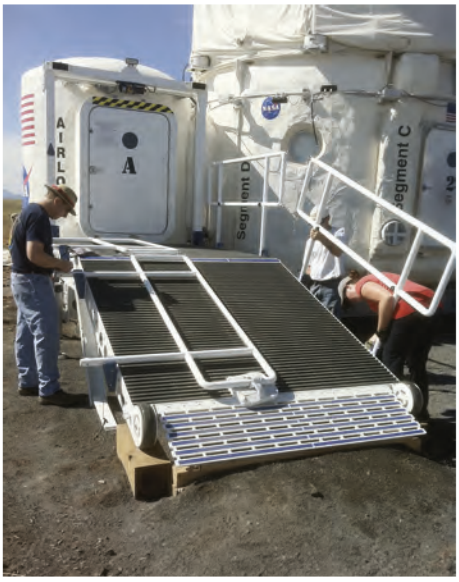

Figure 16: handrail stow process

Figure 17: folding deck ramps partially stowed

Figure 18: folding deck ramps fully stowed

Figure 19: DEVAP can be attached to the habitat module, and transported / lifted as a single unit

Initially the DEVAP was attached to the airlock module (known as the 'dust mitigation module' during the 2011 tests) in the stowed condition at Johnson Space Center, and shipped to the Arizona site as a combined package. The setup of the DSH and other modules (including the dust mitigation / DEVAP combined module) was implemented using a local rental crane and rigging company on site at Black Point Lava Flow. Once the modules were settled, fixed in their final positions, and leveled on the natural landscape, the DEVAP was deployed using the procedure

described above. The deployment of the ramp was executed without incident, and handrails were deployed and stowed as designed (Figure 16).

Since the DEVAP ramp was mainly used for one-g ground and support operations, it soon became clear that the bi-sectional sloping portion was too steep for the operational environment. A field fix was to mound up native soil and place spare wood blocks under the transition plate at the end of the ramp to ease the steepness of the ramp (Figure 15). The field fix was satifactory for the needed analog support and ground support operations, but it is not clear whether the fix would be sufficient for an EVA analog test. It is assumed that a tri-sectional ramp design, with one level platform and two sloped sections would alleviate the problem. Also, it is still unclear what the ergonomic limitations would be for the steep ramp in lunar or Mars environments.

At the end of the two-week D-RATS 2011 mission, the DEVAP stowed as designed (Figure 17 and Figure 19), packaged with the dust mitigation module, and shipped as one package (Figure 19).

V. Future Directions

The Habitat Demonstration Unit (HDU) project has transitioned into the Advanced Exploration Systems (AES) Habitation Systems DSH prototype focusing on deep space instead of planetary surfaces. However, it is assumed that the eventual target of exploration systems is to put humans on the Martian surface, making the DEVAP a relevant element in future mission profiles. Further studies will be conducted when the missions call for it.

Though the bi-sectional DEVAP proved to be too steep in the one-g Earth analog environment, a tri-sectional design might prove to be advantageous for human crews and vehicles due to its shallow slope. Future studies might include constructing a tri-sectional DEVAP for evaluation.

Potential commercial applications may include deployable EVA platforms on commercial lunar, Mars outposts. Near-term applicability may include stable work ramps from vehicles, vessels, or portable shelters.

Acknowledgments

Thanks to the Kennedy Space Center manufacturing team, including Jerad Merbitz, Adam Dokos, David Rowell, Adam Cofield, and Jeremy Parr for the outstanding high-quality product. Special thanks also goes to the former Habitat Demonstration Unit (HDU) team: Kriss Kennedy (NASA Johnson Space Center), Tracy Gill (NASA Kennedy Space Center), Terry Tri (JSC), Robert Howard (JSC), Edward Walsh (JSC -- Jacobs Technology), Chris Chapman (JSC -- JT), Ronny Gambrell (JSC -- JT), and Amanda Lynch (JSC -- JT) for their insight and expert contributions.

The research described in this paper was carried out at the National Aeronautics and Space Administration (NASA), and the Jet Propulsion Laboratory, California Institute of Technology, under a contract with NASA. Copyright 2012. All rights reserved.

References

AS Howe; G Spexarth; L Toups; R Howard; M Rudisill; J Dorsey (2010). Constellation Architecture Team: Lunar Outpost Scenario 12.1 Habitation Concept. Proceedings of the Twelfth Biennial ASCE Aerospace Division International Conference on Engineering, Science, Construction, and Operations in Challenging Environments (Earth & Space 2010); Honolulu, Hawaii, 14-17 March 2010. Reston, Virginia, USA: American Society of Civil Engineers.

AS Howe; KJ Kennedy; P Guirgis; R Boyle (2011). A Dual-Chamber Hybrid Inflatable Suitlock (DCIS) for Planetary Surfaces or Deep Space (AIAA2011-5064). 41st International Conference on Environmental Systems (ICES2011), Portland, Oregon, USA, 17-21 July 2011. Reston, Virginia, USA: American Institute of Aeronautics and Astronautics.

KJ Kennedy; TO Tri; TR Gill; AS Howe (2010). The Habitat Demonstration Unit Project Overview. Proceedings of the Twelfth Biennial ASCE Aerospace Division International Conference on Engineering, Science, Construction, and Operations in Challenging Environments (Earth & Space 2010); Honolulu, Hawaii, 14-17 March 2010. Reston, Virginia, USA: American Society of Civil Engineers.

KJ Kennedy et.al. (2011). NASA Habitat Demonstration Unit Project – Deep Space Habitat Overview (AIAA2011-5020). 41st International Conference on Environmental Systems (ICES2011), Portland, Oregon, USA, 17-21 July 2011. Reston, Virginia, USA: American Institute of Aeronautics and Astronautics.