Lunar Lasercom OCTL Terminal (LLOT)

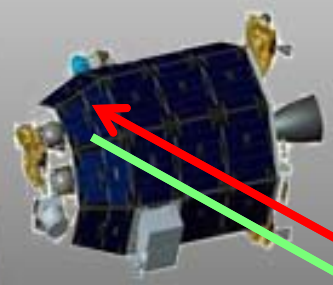

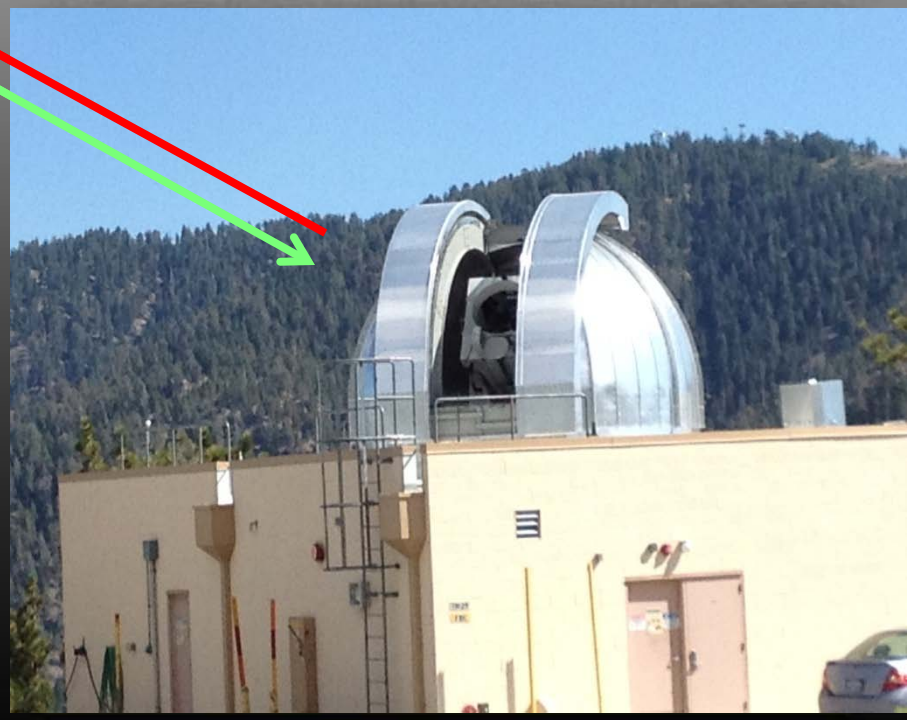

Status November, 2012

Joe Kovalik

Jet Propulsion Laboratory
California Institute of Technology.

Copyright 2012 California Institute of Technology.
Government sponsorship acknowledged.

INTRODUCTION

Jet Propulsion Laboratory
California Institute of Technology

- **Key assumptions**
- **Optics**
  - Receive
  - Transmit
- **Laser**
- **Receiver**
  - Detector
  - Data Recording
  - Data Analysis
- **Telescope Operations**
  - Monitor and Control
- **Concept of Operations**
- **Path to Operations**
  - Schedule
  - Verification and Validation

Project Management & Systems Engineering
Abhijit Biswas
Martin Regehr

Optical Assembly:
Tom Roberts

Beacon Laser Assembly:
Malcolm Wright

Receiver Assembly:
Kevin Birnbaum (Lead)
Meera Srinivasan
Michael Cheng, Kevin Quirk

OCTL Telescope & Operations (Includes Monitor & Control):
Joseph Kovalik
Malcolm Wright (Laser safety)

KEY ASSUMPTIONS

- **Support 16-day demonstration (August 15-to-October 31, 2013)**
- **Unmodified OCTL restricts minimum Sun-Earth-Probe (SEP) angle to 10°**
- **Laser beacon based acquisition of LLST**
  - **No uplink** as used between LLGT and LLST
  - Downlink with free-running LLST clock
- **Record downlink per LLCD ICD specifications**
  - Limited real-time channel and link diagnostics
  - Post-processing of recorded waveform to extract code-words
- **Interfaced to Lunar Laser Operations Center (LLOC) in LL-MIT**
  - Limited real-time data exchange during operations
- **Downlink Irradiance @ 1550.12±0.1 nm**
  - Acquisition Mode: 0.17 nW/m^2
  - Tracking Mode: 2.1 nW/m^2
- **Uplink Irradiance @ 1567.95± 0.1 nm**
  - Acquisition Mode: 3.6 nW/m^2
  - Tracking Mode: 36 nW/m^2

LLOT OPTICS DESIGN OVERVIEW

Jet Propulsion Laboratory
California Institute of Technology

- **2 major separate subsystems**
  - Transmit system controls alignment and divergence of 6 beams
  - Receive system sends light to acquisition camera and data detector(s)

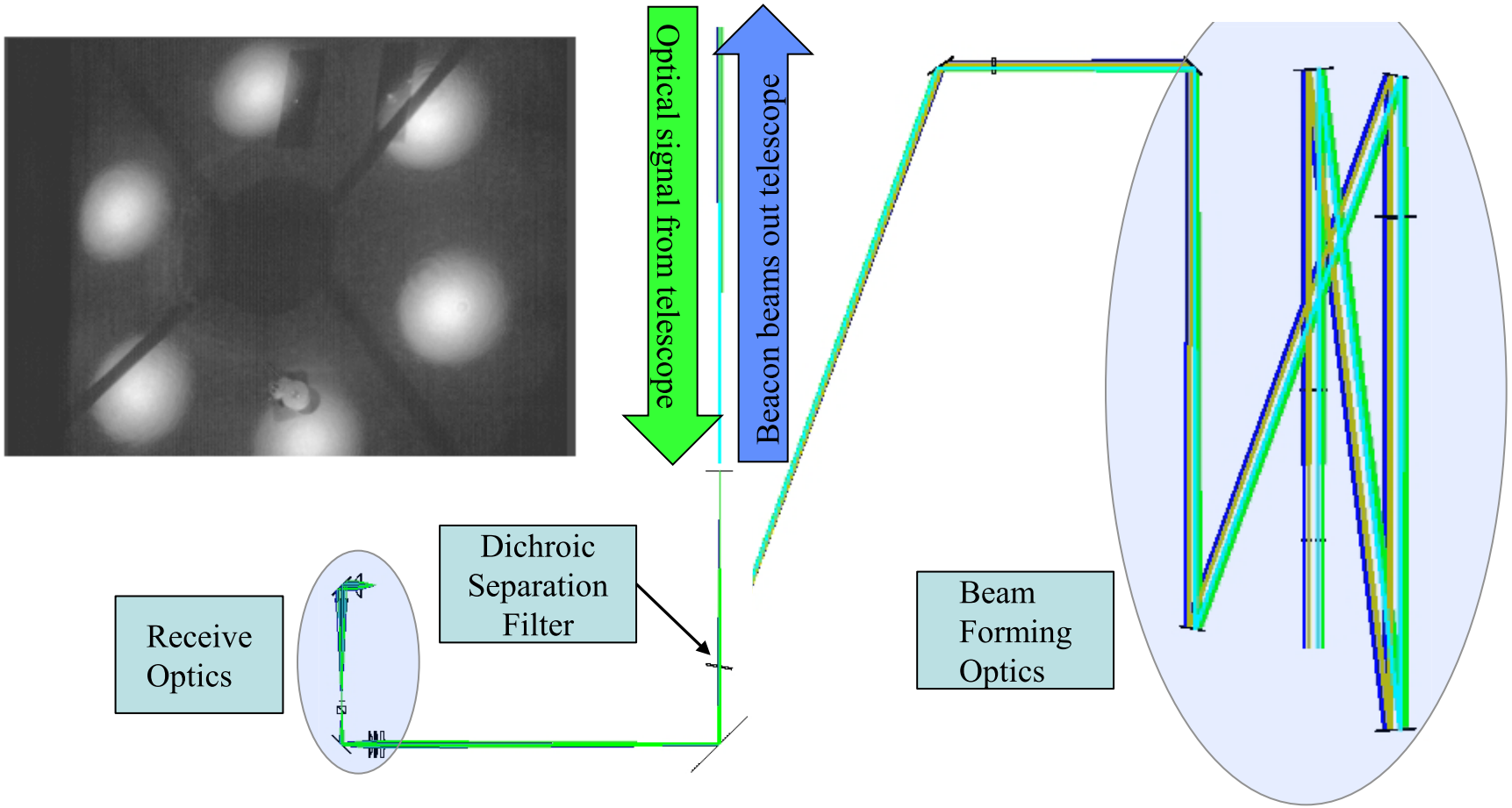

TRANSMIT SYSTEM

- **Long paths required to match telescope F/#**
- **Path-lengthening mirrors re-designed with crossing paths to minimize reflections**
- **Zoom lens system and rail-mounted converger lens aligned with table**

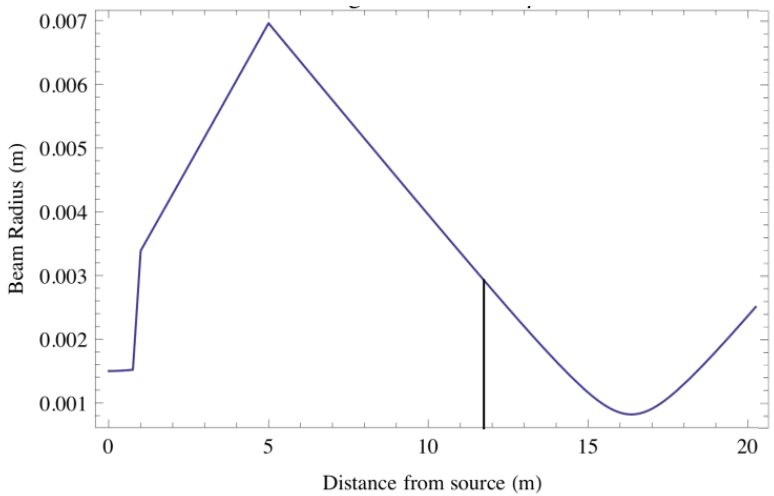

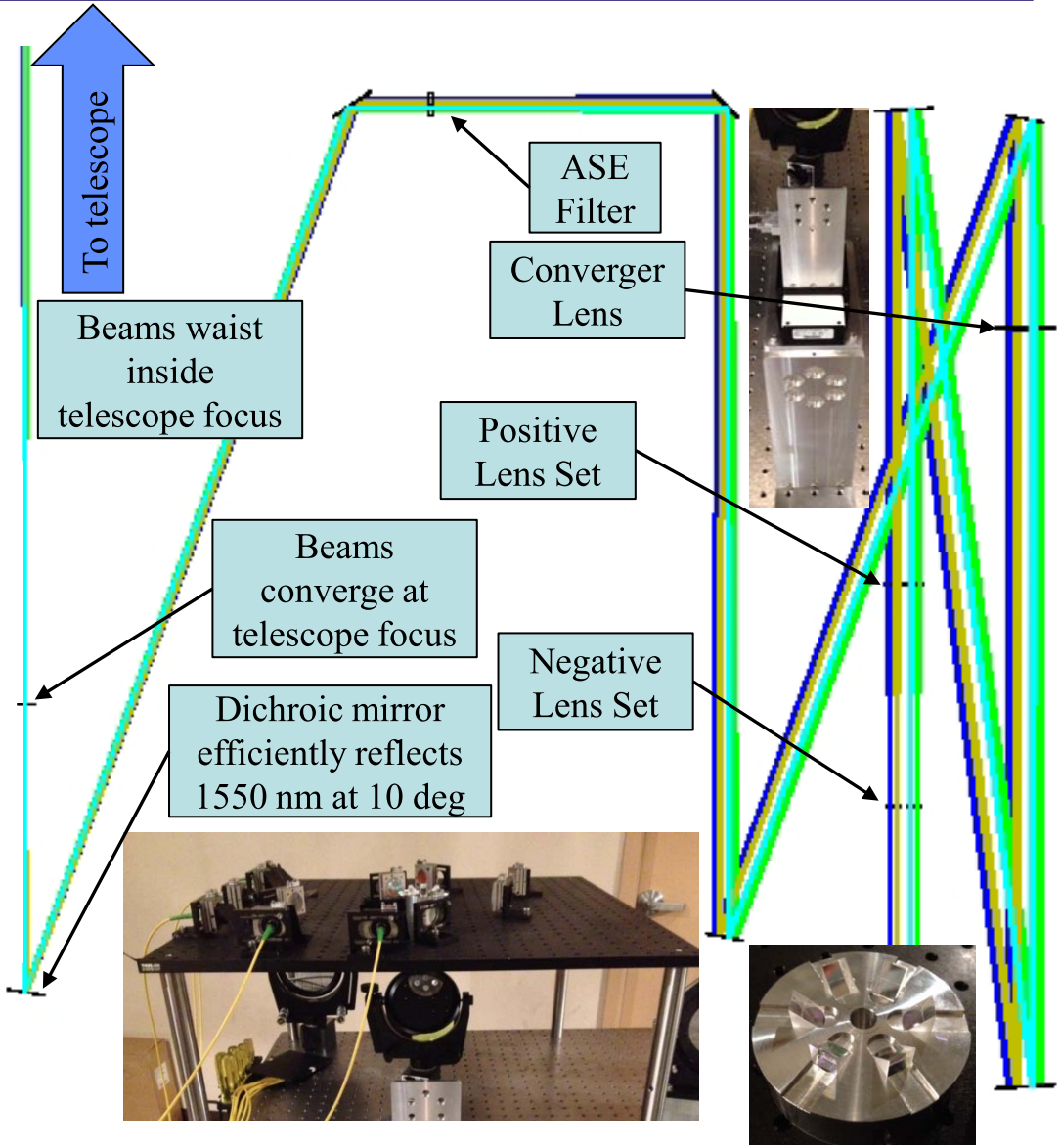

RECEIVE SYSTEM

Jet Propulsion Laboratory
California Institute of Technology

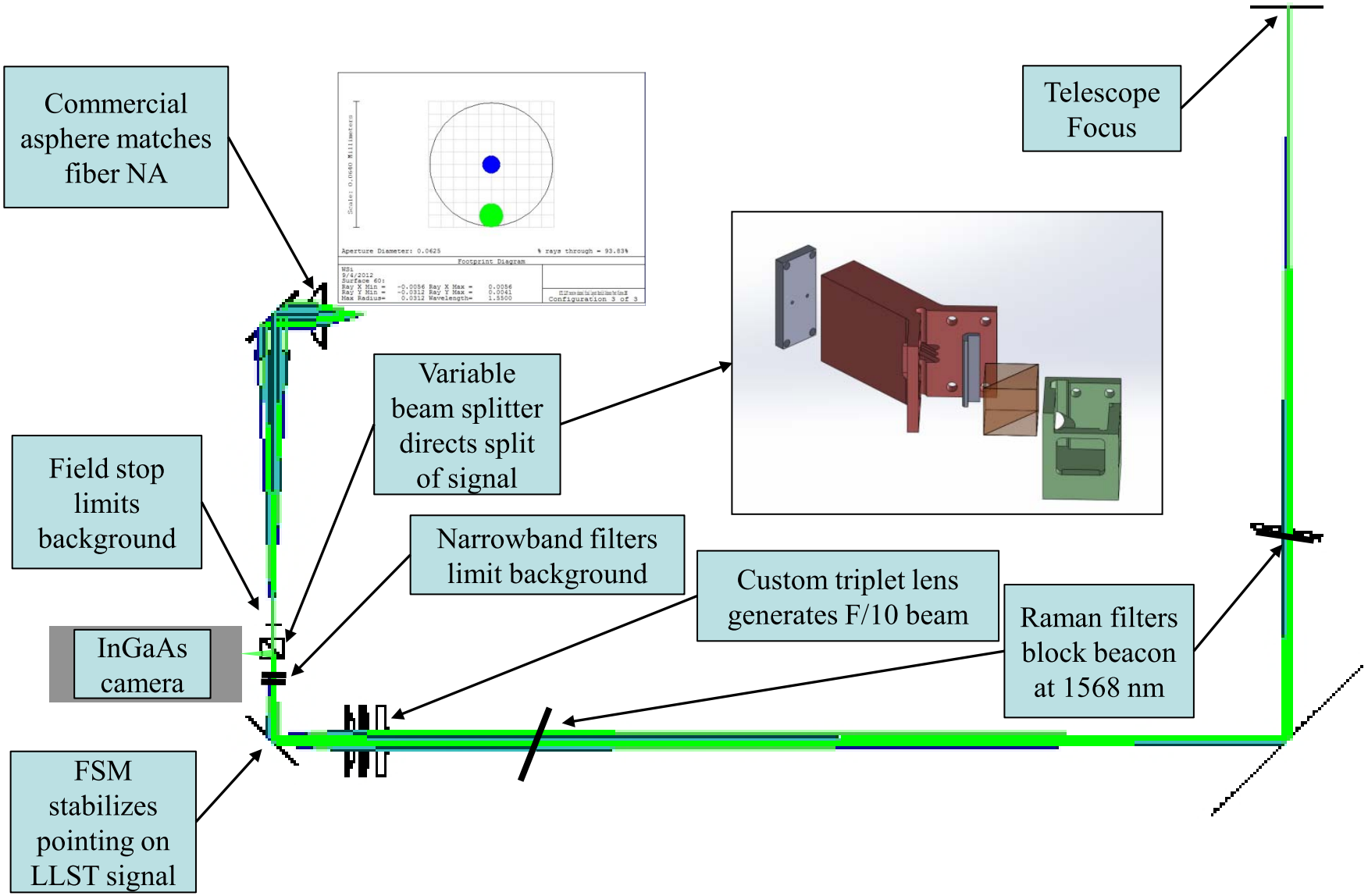

LASER SELECTION

Jet Propulsion Laboratory
California Institute of Technology

Several vendors surveyed:

- Based on link budget, requirements were:

  P_{avg} = 10 W, $\Delta\lambda$ < 0.05 nm line-width.
- Single vendor (Manlight) met requirements with some development
- Retired risk with procurement of prototype initially– 6 lasers in fabrication
- Directly modulated pump lasers in a master oscillator power amplifier design

Drift in relative wavelength over 15 min (~ 0.7GHz)

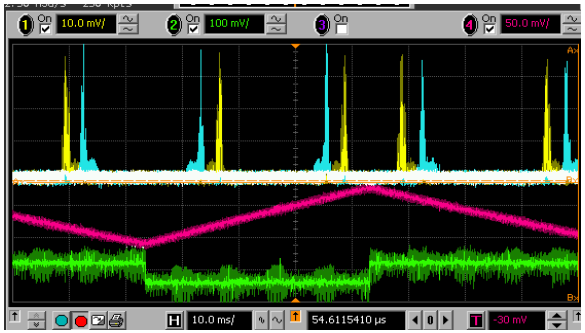

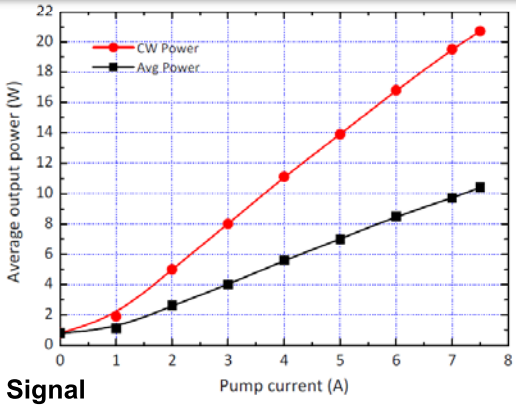

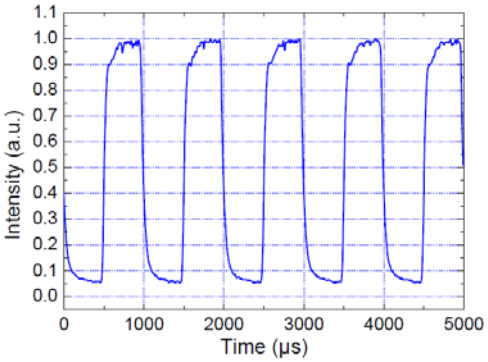

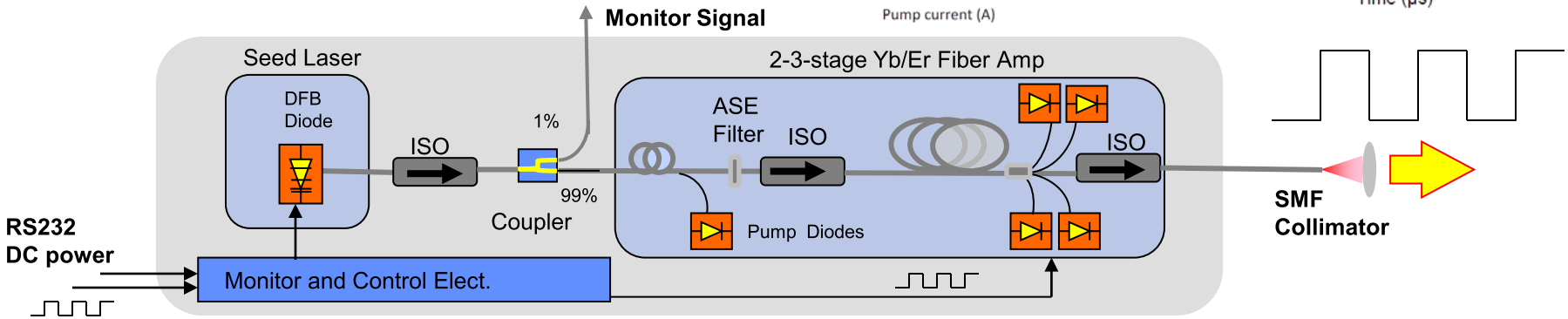

InGaAs (1550nm) IPD RESULTS

Jet Propulsion Laboratory
California Institute of Technology

- **Desired <200ps jitter.**
- **Measured ~500ps.**
  - Bad for 155Mbps link, OK for 39Mbps
- **Jitter distribution closer to exponential than Gaussian**
- **Output statistics of detector are severely corrupted by after-pulsing**
- **The performance and lifetime of new devices is uncertain**
  - Only one tube is still functional

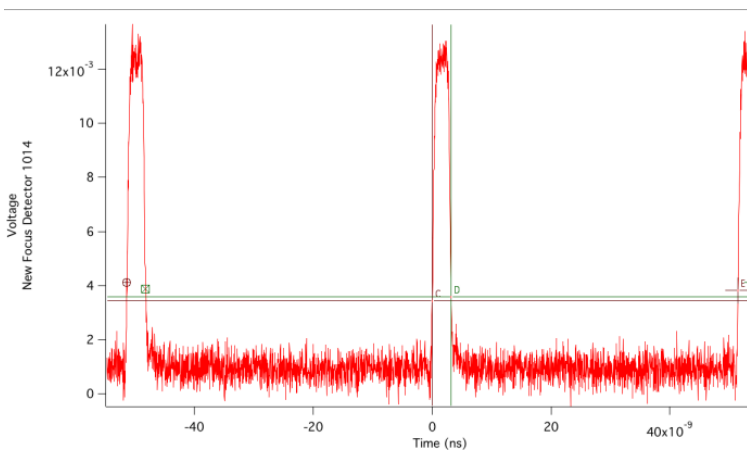

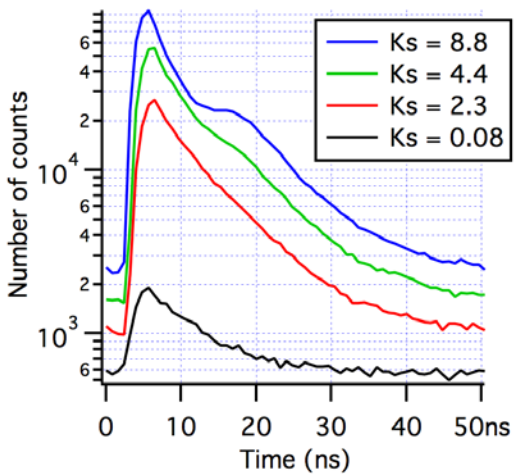

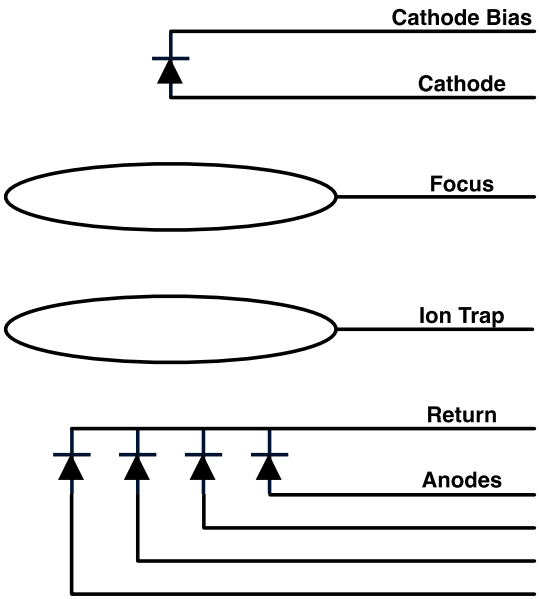

WSi DETECTOR DEVELOPMENT

Jet Propulsion Laboratory
California Institute of Technology

- **WSi devices have demonstrated excellent performance**
  - 8-pixel device met our detection efficiency requirement
  - using just 6 pixels.
  - Large area enables easy and robust fiber coupling
  - High yield of devices from each fabrication run
  - Jitter <100ps, dark count rate negligible
  - 4.2 nm Tungsten Silicide nanowires
  - 2 sets of 6 interleaved wires
- **HgCdTe linear mode APDs**
  - Have some devices in-hand but not tested.
- **Photomultipliers (PMTs)**
  - Hamamatsu QE is 2% quantum but can handpick 8%
  - Potential problems with saturation/blocking effects at our count rates
- **Discrete Amplification Photon Detector (DAPD)**
  - Amplification Technologies
  - Microchannel gain medium
  - May have problems with after pulsing
  - Low cost (<$5k)

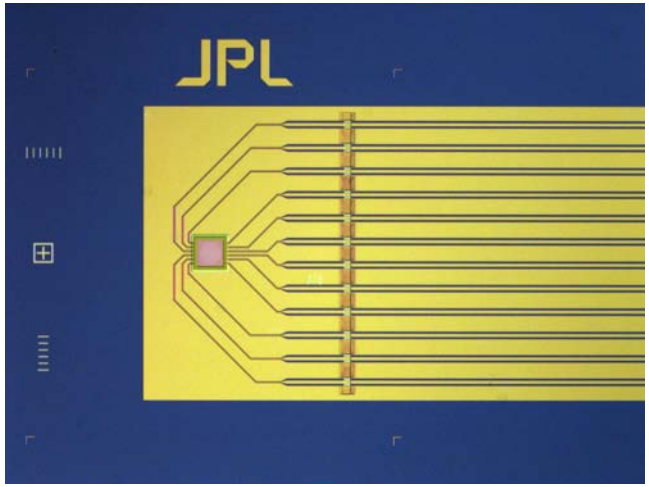

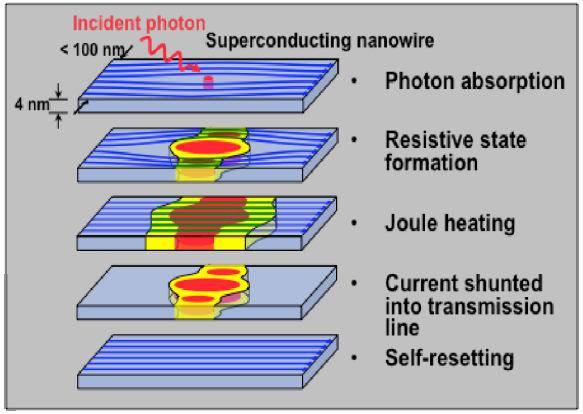

DATA RECORDING

Jet Propulsion Laboratory
California Institute of Technology

- **The LLOT Receiver Assembly samples, stores, and post-processes the Lunar Laser Communications Demonstration (LLCD) downlink signal**
  - There are two PX 1500 digitizer cards in the Signatec signal acquisition system Stores the samples on a redundant array of independent disks (RAID)
  - Each PX1500 digitizer card can support a continuous 1.4 GB/s PCIe transfer rate to the RAID. This is equivalent to 1.4G samples/s at one byte per sample
  - One card sampling at 1.24416 GHz can support 155 Mbps at 1 sample/slot
  - The RAID can store 24TB or about 20 passes (where each pass is 15 minutes long.)

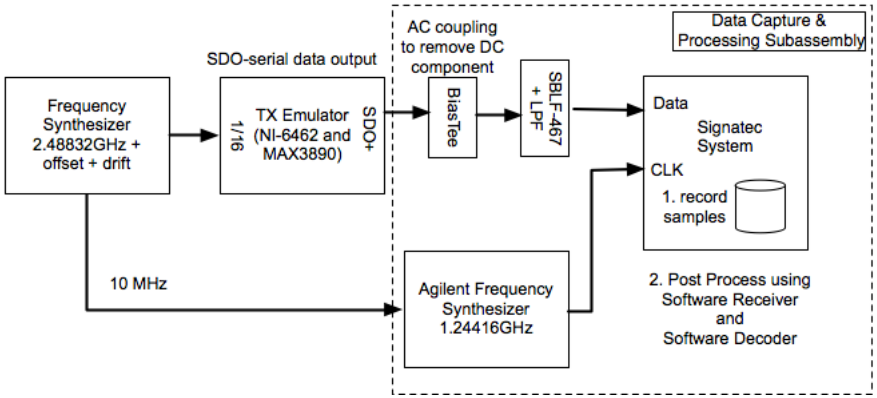

- **Signal parameters are estimated periodically during track**
  - Valid frame flag (frame = block of 64 FAS periods)
  - Slot frequency
  - Ks, Kb

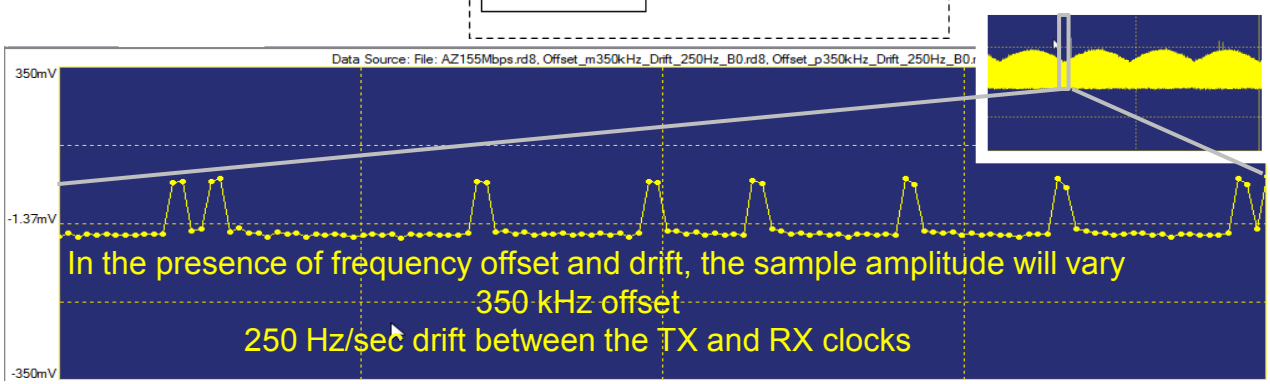

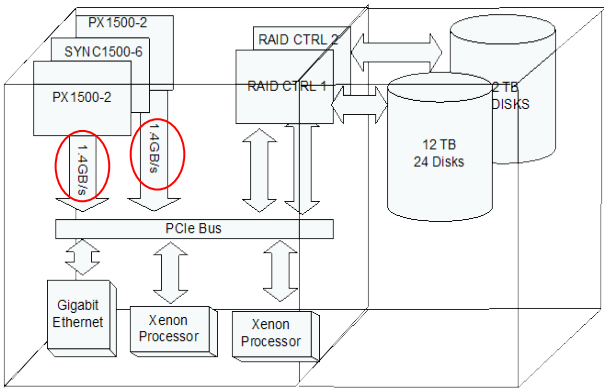

Signatec Signal Acquisition System

DATA PROCESSING

Jet Propulsion Laboratory
California Institute of Technology

- **Multi-level sample decision thresholding**
  - Decision thresholds optimized for detector output pulse shape
- **Interpolated log likelihood ratio with detector jitter compensation**
  - Pulse jitter spreads signal intensity over multiple slots
  - Recovers ~2dB of loss due to timing jitter and 200 ps slot jitter
- **Significant slot clock frequency offset and drift are expected**
  - Doppler offset and rate dominated by LLST free-running VCSO effects
  - Slot frequency tracking algorithm makes block-based slot clock frequency and phase estimates

Downlink clock	Offset	Drift	Values at 1.25 GHz
Doppler	±7 ppm	±7 ppb/sec	±8.75 kHz, 8.75 Hz/sec
Free-running VCSO	±280 ppm	±0.2 ppm/sec	±350 kHz, 250 Hz/sec

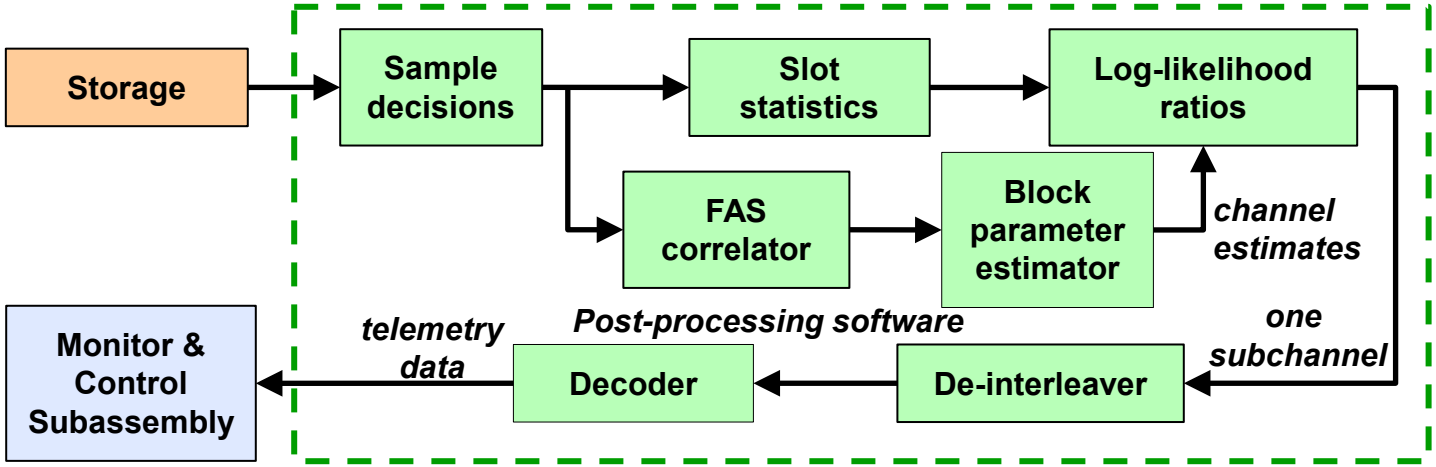

Down Link (Mbps)	Through Put (bps)	Telemetry Channel (hours)
155	100k	98
78	83k	117
39	75k	130

LLOT CONTROL

Jet Propulsion Laboratory
California Institute of Technology

- **OCTL telescope controlled through RMI**
  - All commands to telescope pointing
  - All readback from telescope
- **Cascaded control loop with FSM and telescope**
  - InGaAs camera sensor
  - Offset for look behind/point ahead added to FSM
- **Laser/Optics controller commanded via LLOT controller**
  - Variable beam splitter
  - Uplink zoom
  - Laser

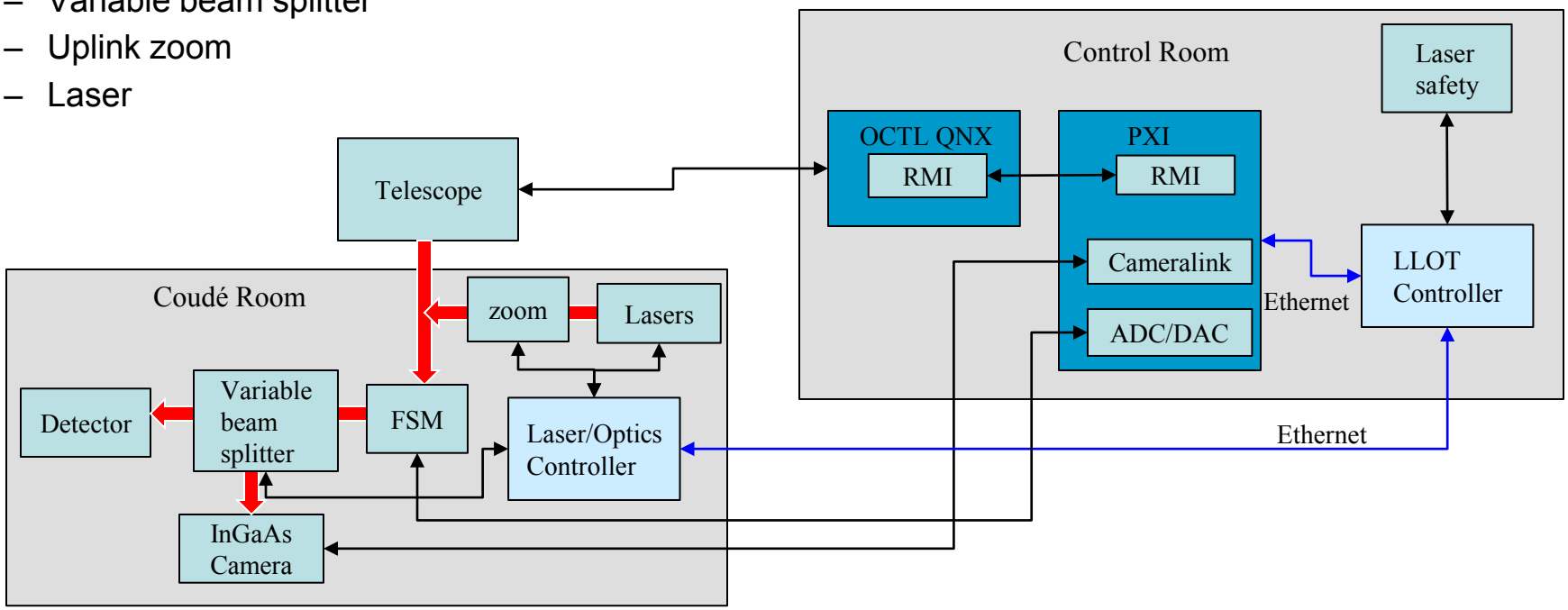

MONITOR AND CONTROL: ARCHITECTURE

- **Subsystems send and receive data to LLOT Controller**
  - **OCTL Telescope Assembly**
  - **OCTL laser safety System**
  - **Laser/Optics Assembly**
  - **Receiver Assembly**
- **Sub system computer control used during sub system testing**
  - Communication to LLOT controller for commands and data transfer during operations
- **LLOT Controller interface to ITOS server**
  - ITOS server will communicate between LLOC and LLOT
  - LLOT Controller will relay information from subsystems to ITOS server
  - LLOT will relay information from ITOS to subsystems
    - Power received at LLST
    - Oscillator temperature on LLST

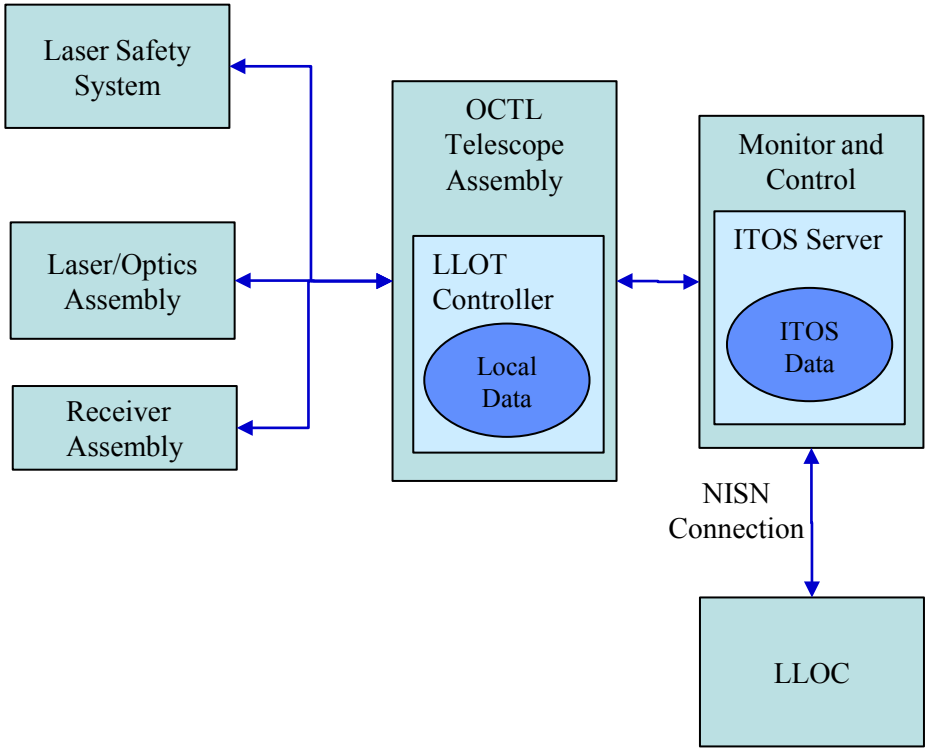

CONCEPT OF OPERATIONS

Jet Propulsion Laboratory
California Institute of Technology

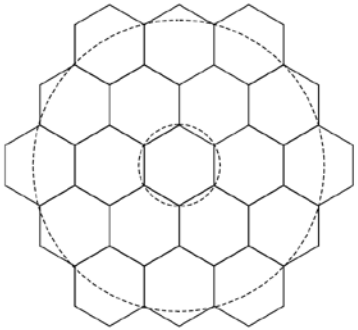

RSS'd Ephemeris + Blind-pointing uncertainty 191 µrad diameter

ACQUISITION
Beacon Irradiance
36 nW/m^2
@ 1567.95± 0.1 nm

1

19-step step-stare scan with 5-s dwell time
110 µrad uplink divergence
~ 100 s to search out 253-µrad uncertainty diameter

TRACKING
Beacon Irradiance
3.6 nW/m^2
@ 1567.95± 0.1 nm
Beam divergence 106 µrad

ACQUISITION
Downlink Irradiance
0.17 nW/m^2
@ 1550.12± 0.1 nm

OCTL Telescope

2

OCTL tracks on downlink
Narrows beacon divergence to 40µrad

TRACKING
Irradiate with
2.1 nW/m^2
@ 1550.12± 0.1 nm

VERIFICATION & VALIDATION

- **Satellite retro test**
  - Blind point to SLR satellites
  - Measure return as a function of offset pointing
- **1 km range test**
  - **Downlink:** Track moving spot at opposite mountainside
  - **Uplink**: Image and measure transmitted spot at opposite mountainside
- **Interface to MITLL Mission Operations Centre**
  - Send emulated data between LLOT and LLOC
- **End to End Downlink**
  - Verify downlink transmission through LLOT filters
  - Verify real-time diagnostics while recording data @ 155 Mb/s, 79 Mb/s and 39 Mb/s
  - Representative signal and background levels predicted during operations
  - Emulated atmospheric fades

❑Full Verification with LLST EDU modem
❑JPL Test signal generator and laser with COTS parts and LLMIT data file

- **End to End Uplink**
  - Verify uplink transmission through LLOT filters
  - Modulated output of beacon
  - Tuning of laser wavelength (to avoid interference effects)

❑Full Verification with LLST_Beacon Receive Emulator Rack
❑Measure uplink laser with standard laboratory equipment
- Calibrated Laser Spectrum Analyzer
- Oscilloscope

SCHEDULE
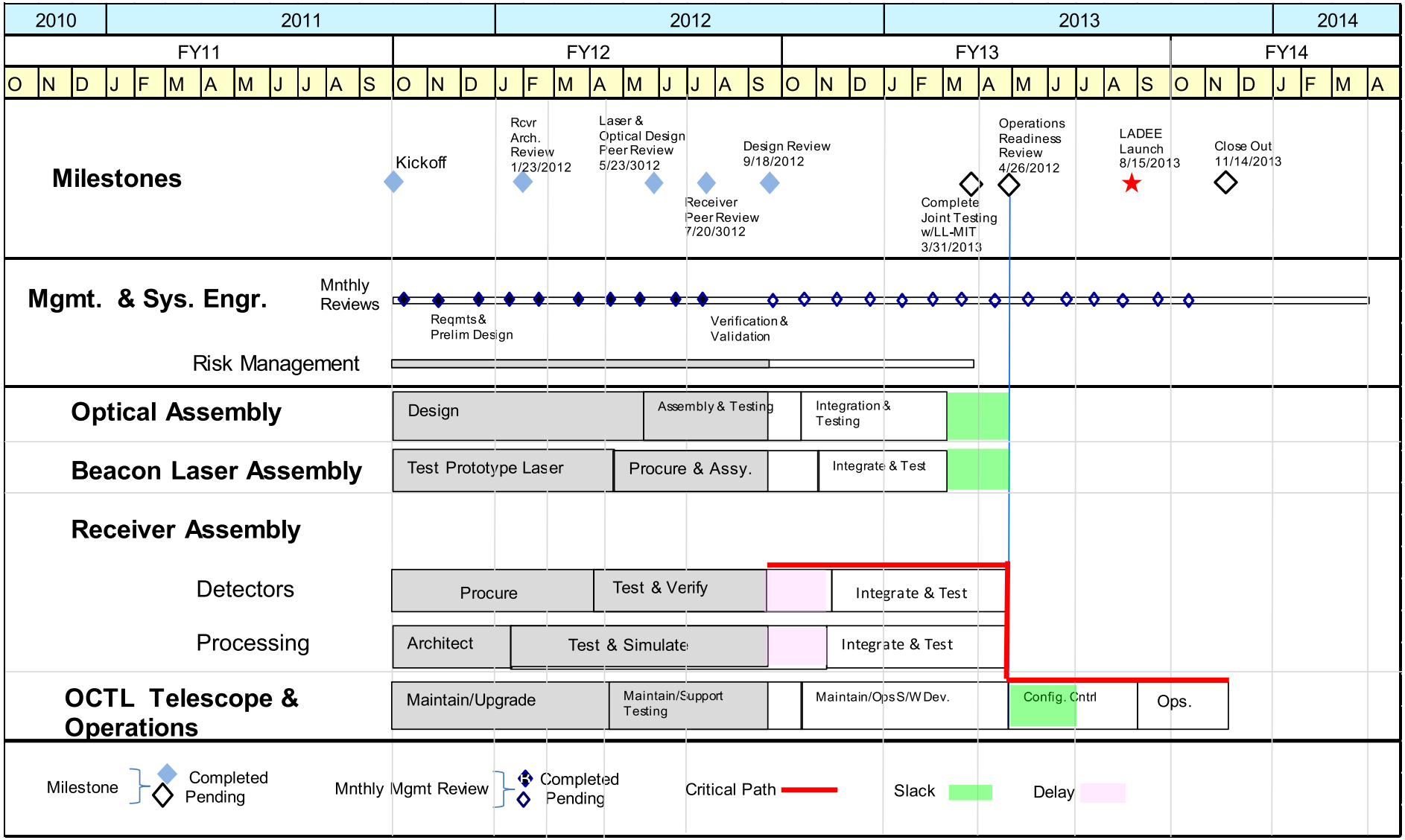
Jet Propulsion Laboratory
California Institute of Technology