The Institution of Engineering and Technology

Radar 2012 Conference

Implementation of RF Circuitry for Real-Time Digital Beam-Forming SAR Calibration Schemes

Stephen Horst, James Hoffman, Dragana Martin, Scott Shaffer, Tushar Thrivikraman, Phil Yates, and Louise Veilleux

Jet Propulsion Laboratory, California Institute of Technology
Pasadena, CA

October 24, 2012

This document has been reviewed for export control. Approved for public release and redistribution.

Outline

- SweepSAR Concept
- SweepSAR Performance Considerations
- T/R Calibration for on-board digital beamforming
  - Impact of Interferers
  - T/R Module Design
- External Reflections
- Simulation
- Summary

This document has been reviewed for export control. Approved for public release and redistribution.

SweepSAR Concept

- The big picture: use interferometry to detect solid-earth deformation down to mm-scale
- Useful for earthquake science applications among others
- Wide swath desired to reduce temporal baseline while maintaining near-global coverage

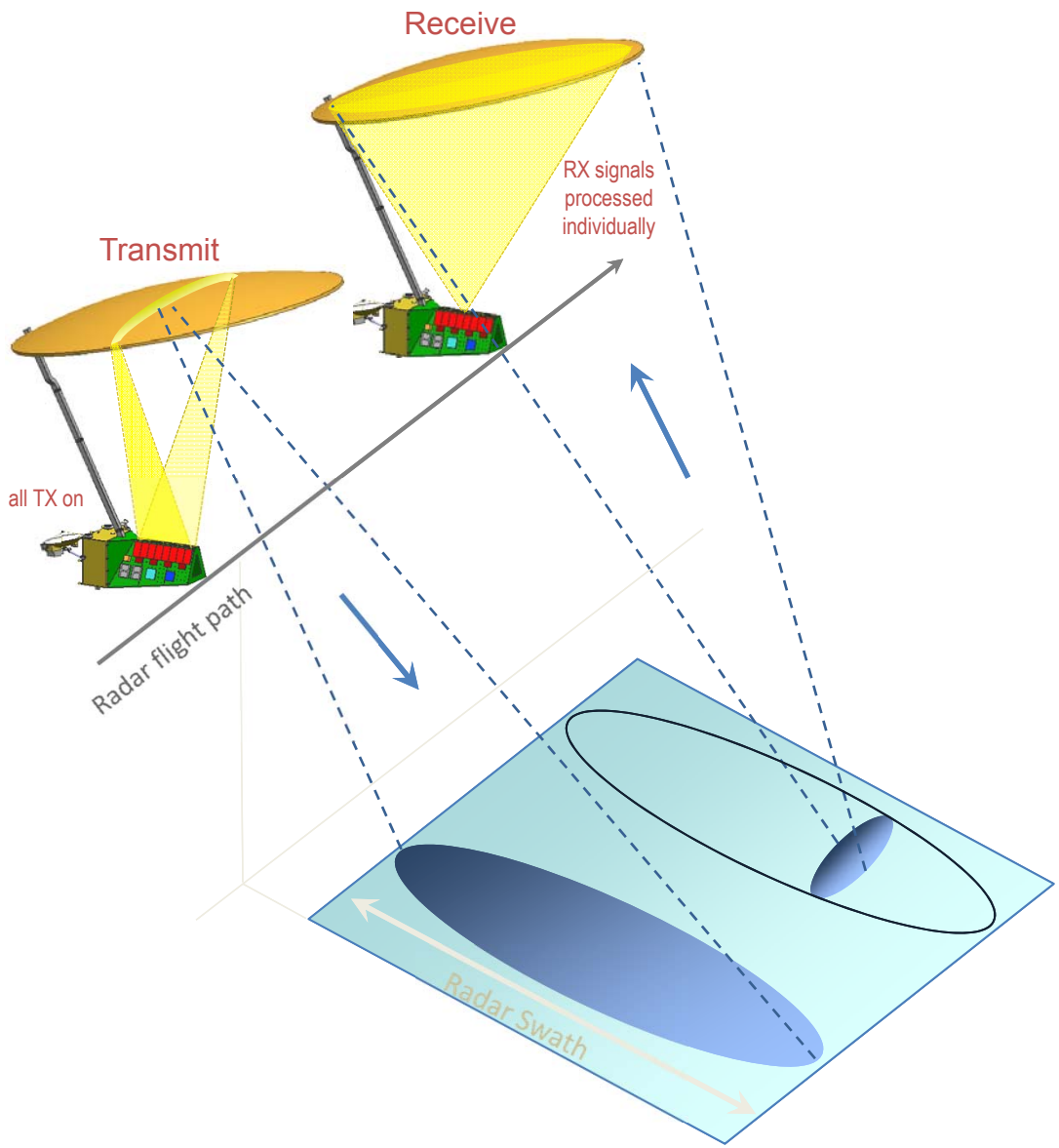

Repeat-pass Differential Interferometry

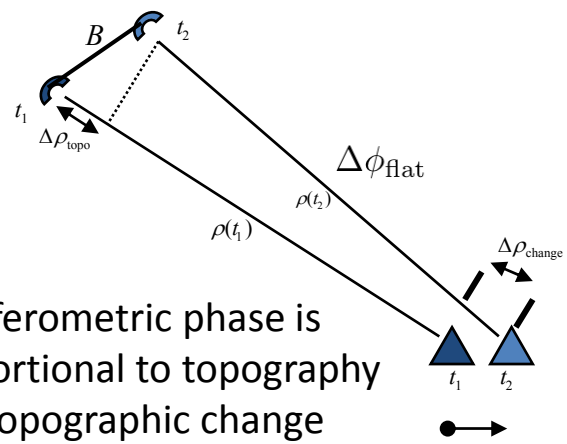

- Interferometric phase is proportional to topography and topographic change
- Known topography removed to reveal surface change

This document has been reviewed for export control. Approved for public release and redistribution.

SweepSAR vs. ScanSAR

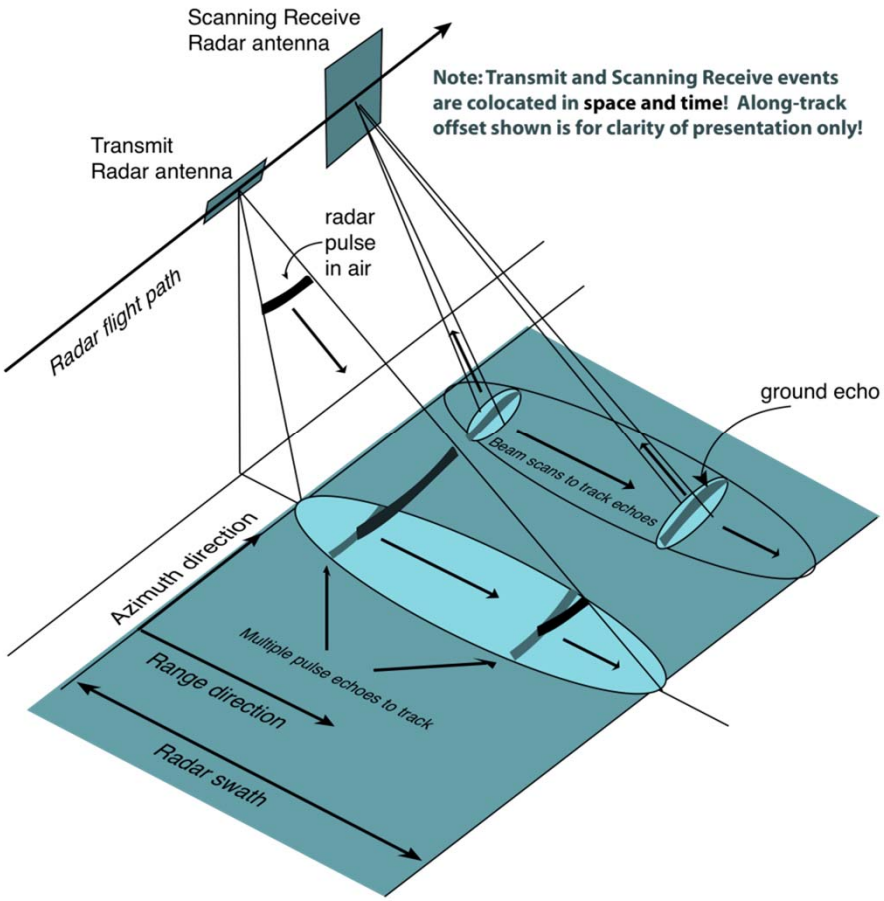

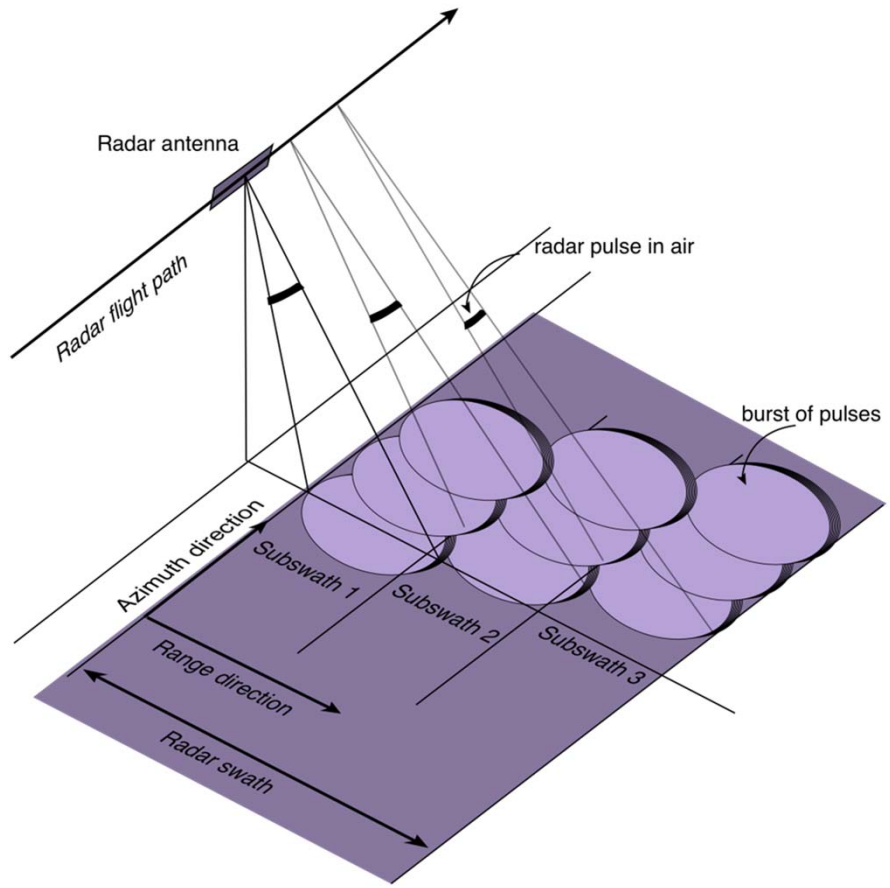

- Resolution not limited by burst time
- Increased number of looks
- No subswath stitching required
- Reduced along-track scalloping

- Return occurs within interpulse period (no gaps)
- Reduced range ambiguities
- On-board processing not as intensive

This document has been reviewed for export control. Approved for public release and redistribution.

On-Board Digital Beamforming

Beamformed Antenna Pattern

$$P(\theta,t) = \underbrace{CH_{A(t)}(\theta)W_1{}^*(t)} + CH_{B(t)}(\theta)W_2{}^*(t) + \cdots + CH_{n(t)}(\theta)W_n{}^*(t)$$

Each term is a beamformer "tap"

Inherent antenna pattern of selected hardware channel

Channels selected by time-based function

Time-based weighting value

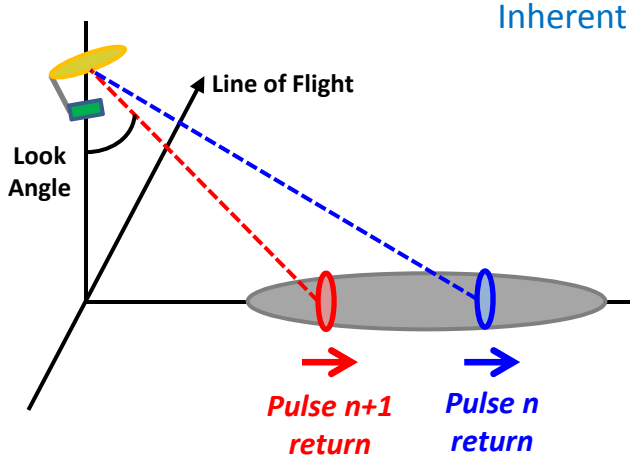

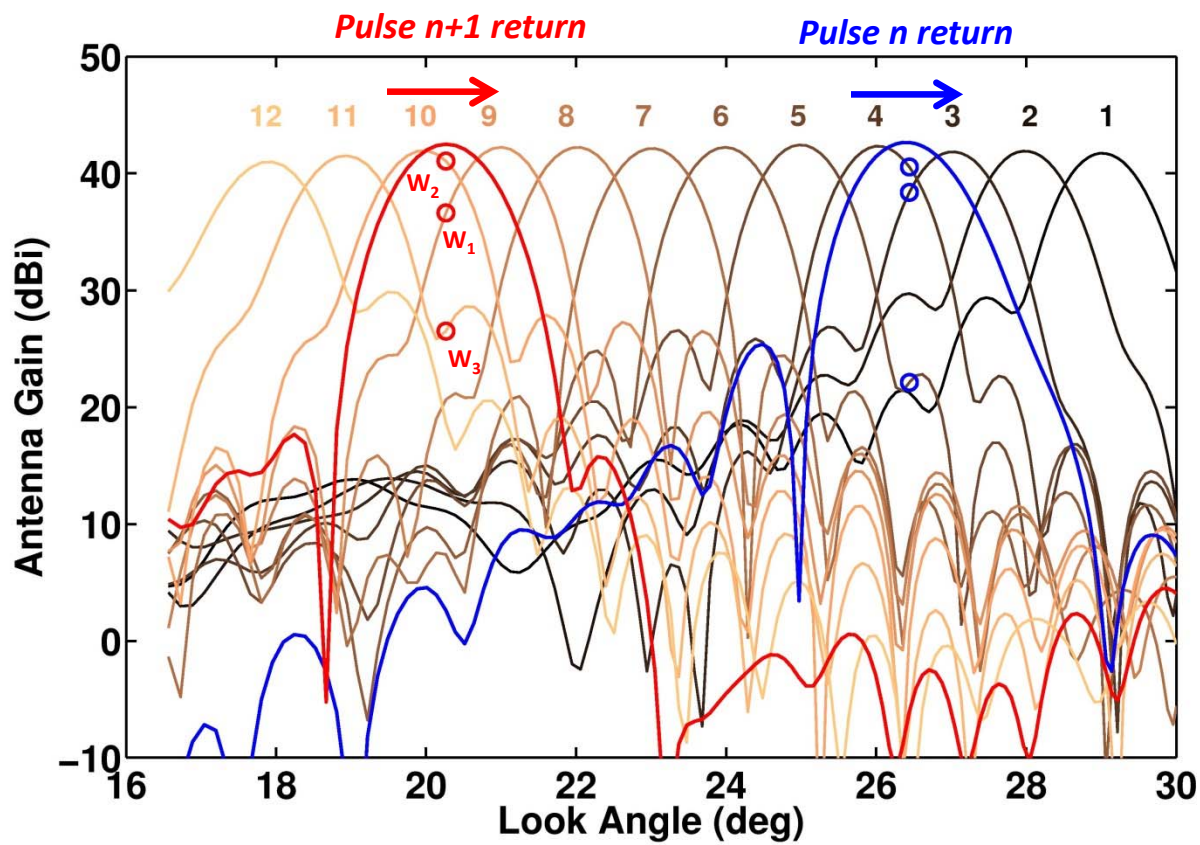

- Digital beamforming enables a smooth electronic sweep of the receive echo
- Wide swath means returns last longer than PRI
  - Need to sweep multiple returns simultaneously
  - Leads to gaps in data during transmit events

This document has been reviewed for export control. Approved for public release and redistribution.

SweepSAR Swath Gaps

- Conventional Radar data acquisition timing – Receive Window is within the Inter-Pulse Period (IPP):

- SweepSAR wide-swath data acquisition timing – Receive Window extent is longer than an IPP:

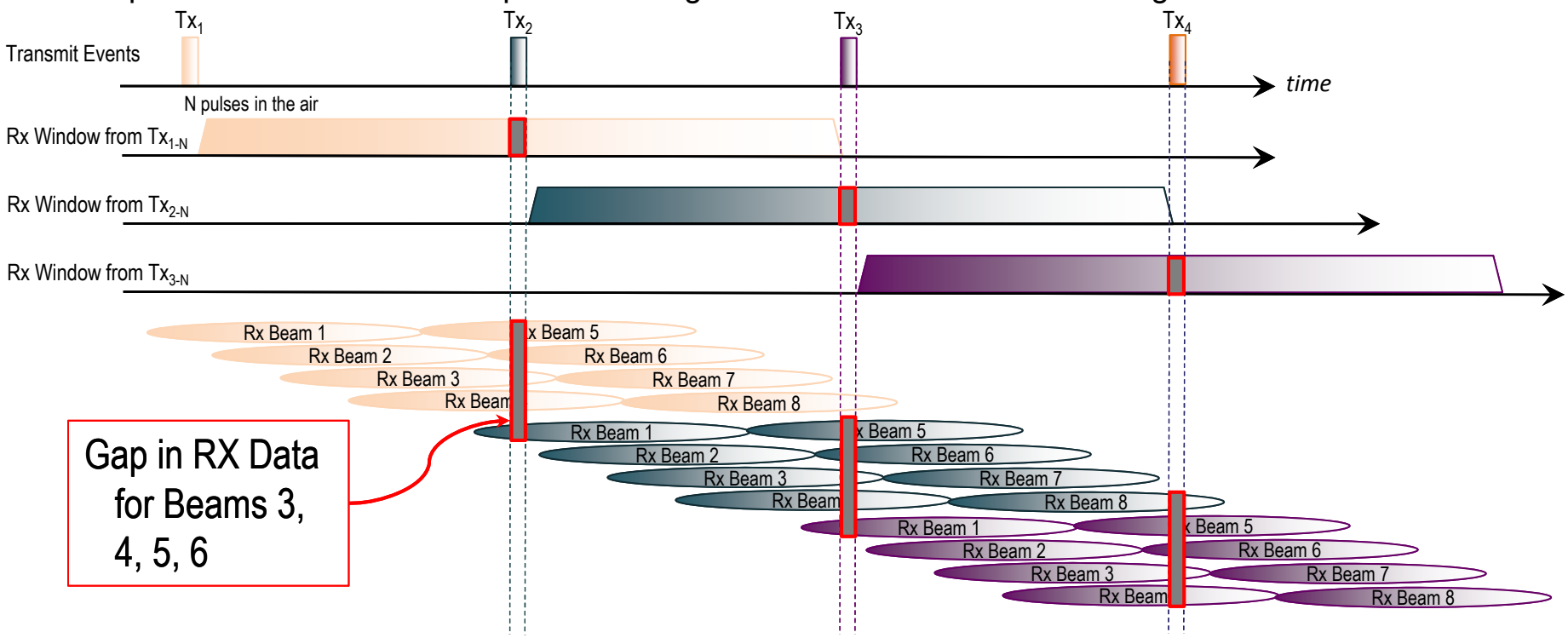

- The Receive channels ("Rx Beams") that are active during a Transmit event are blanked for the duration of the Transmit pulse, resulting in gaps in the swath

This document has been reviewed for export control. Approved for public release and redistribution.

Calibration Concept

Traditional Loopback Calibration

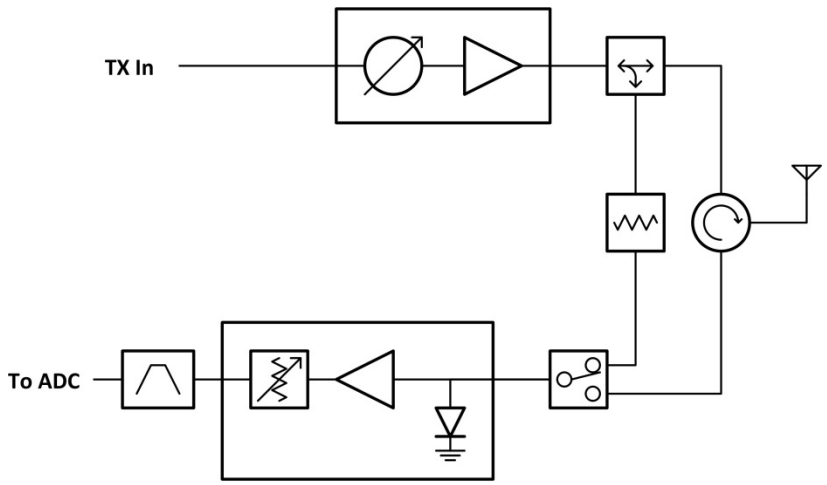

SweepSAR Digital Calibration

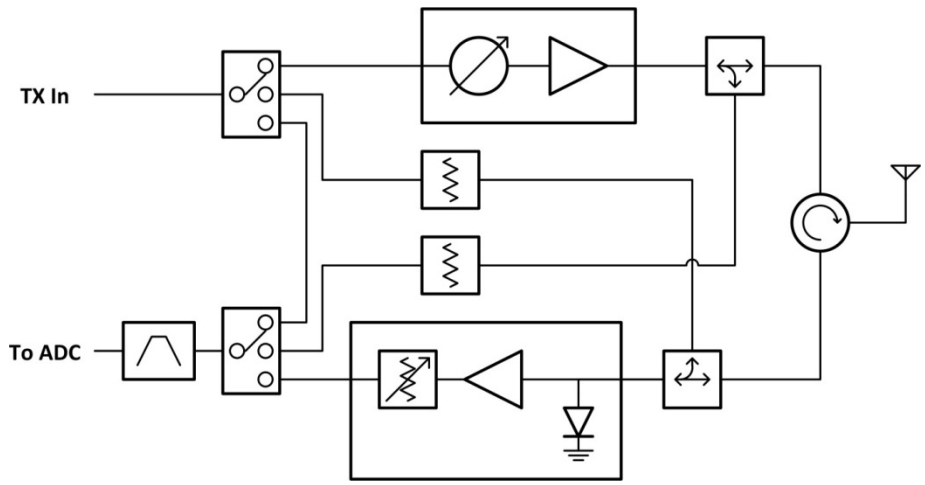

- **Relaxes the isolation requirement between TX and RX**
- **Calibration can be done during actual receive events**
- **Differentiate between TX and RX changes (important for SweepSAR)**
- **Compensates for all changes not just temperature**

This document has been reviewed for export control. Approved for public release and redistribution.

Calibration Architecture

Three valid modes of operation

Transmit Mode

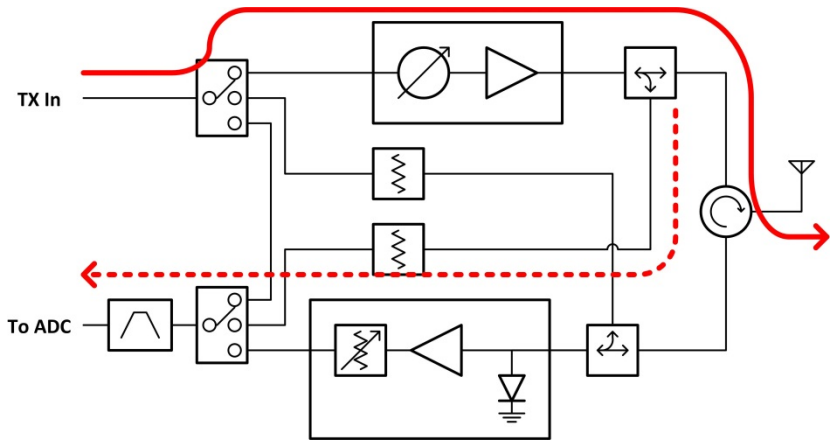

- Set phase shifter values
- Chirp estimation for data header

Receive Mode

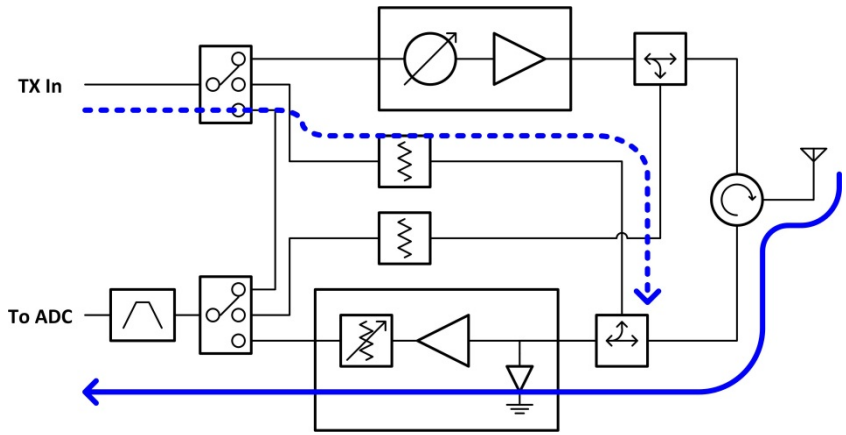

- CW tone to correct channel for on-board beamforming

Bypass Mode

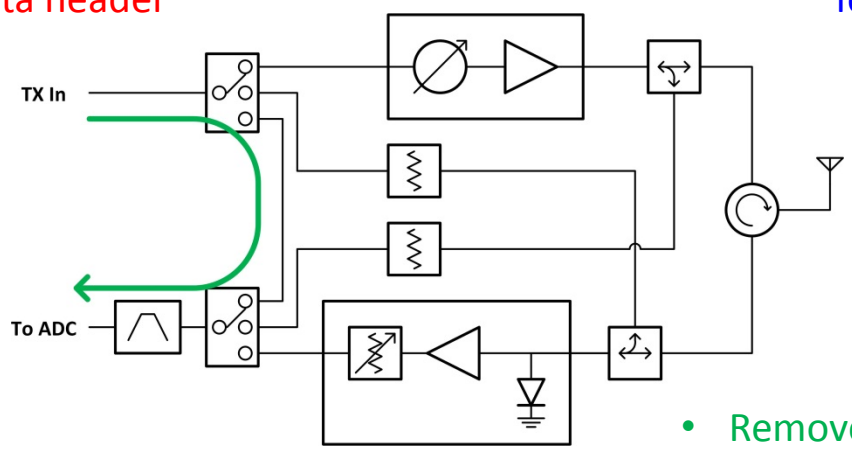

- Remove common parts from TX cal
- Align ADC clocks

This document has been reviewed for export control. Approved for public release and redistribution.

Impact of Interferers

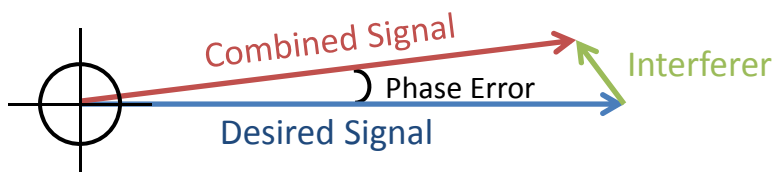

- **Interferometry requires phase stability rather than phase accuracy**
- **Slope of the phase error curve is important**
- **Signal is nearly sinusoidal so bounds are similar**

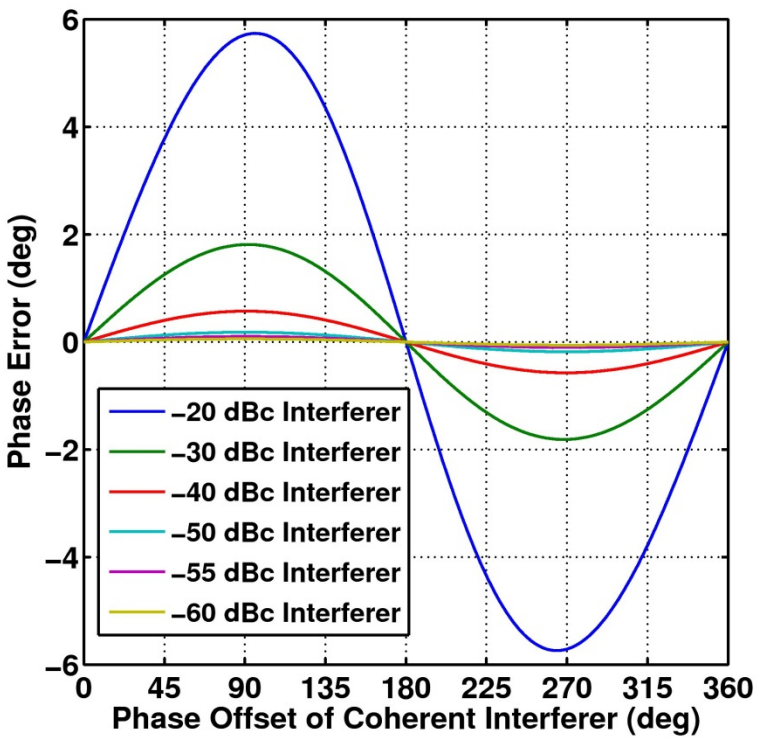

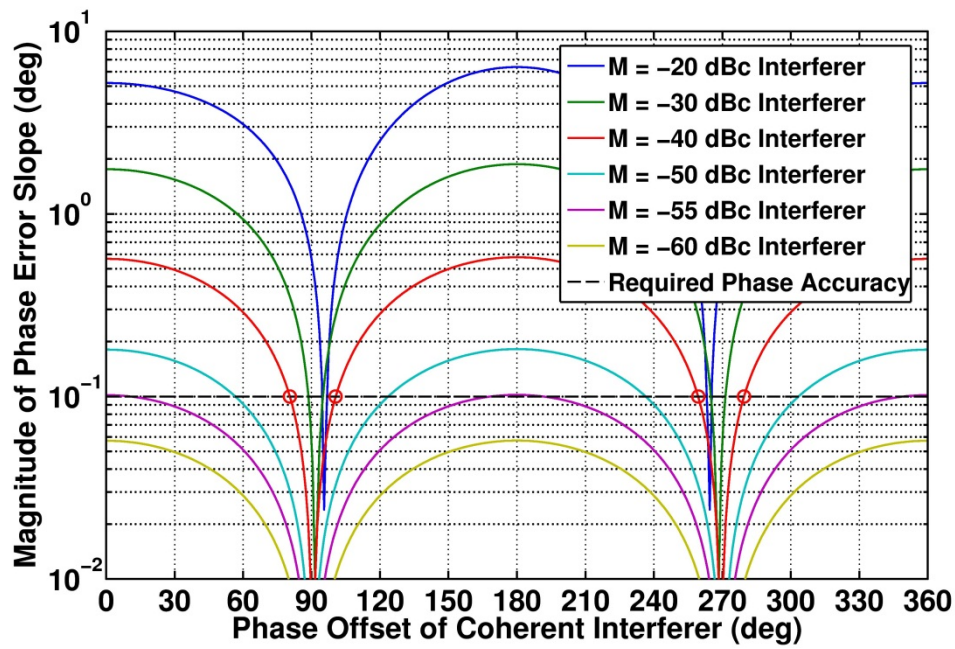

This document has been reviewed for export control. Approved for public release and redistribution.

TX Input: Switches vs Couplers

- There is a desire to move the switches out of the primary transmit and receive paths to increase reliability
- To do so would violate the 55 dB isolation requirement

Coupler Topology

Transmit chain needs dynamic range (DR) of 150 dB!

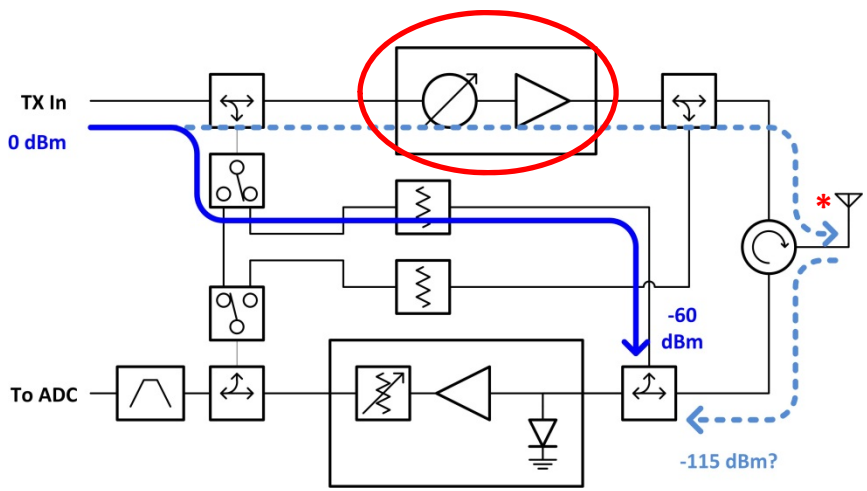

Switch Only Topology

In-path switch directly relieves dynamic range requirements on transmit chain

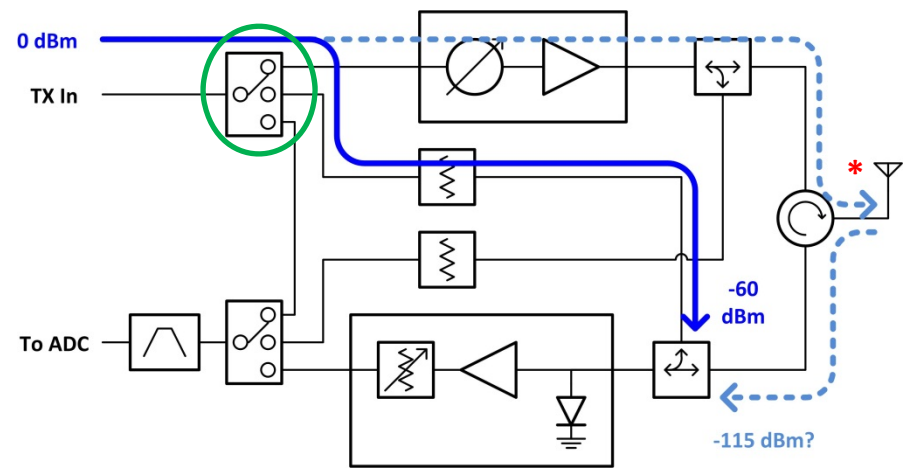

Conclusion: Switch needs enough isolation to keep TX chain DR requirement to 100 dB. (From 50 dB gain when enabled to 50 dB loss when disabled)

* Working assumption is 15 dB return loss on antenna

This document has been reviewed for export control. Approved for public release and redistribution.

ADC Output: Switch vs Couplers

- Similar concerns during TX mode that in-path switch represents increased failure risk
- In-path switch architecture is also needed here to meet the 55 dB isolation requirement
- Furthermore, low noise linear amplifiers do not like to be DC switched…

Coupler Topology

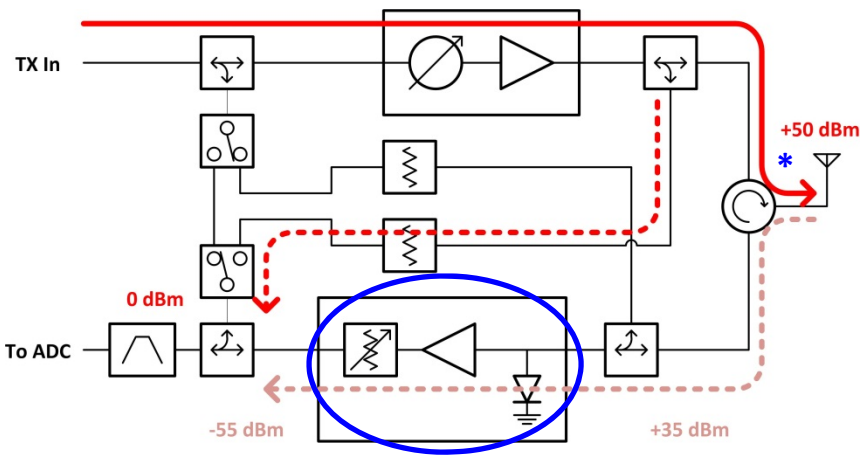

- **Receive chain needs dynamic range (DR) of 140 dB!**
- **Can't rely on amplifier power-down to achieve this**

Switch Only Topology

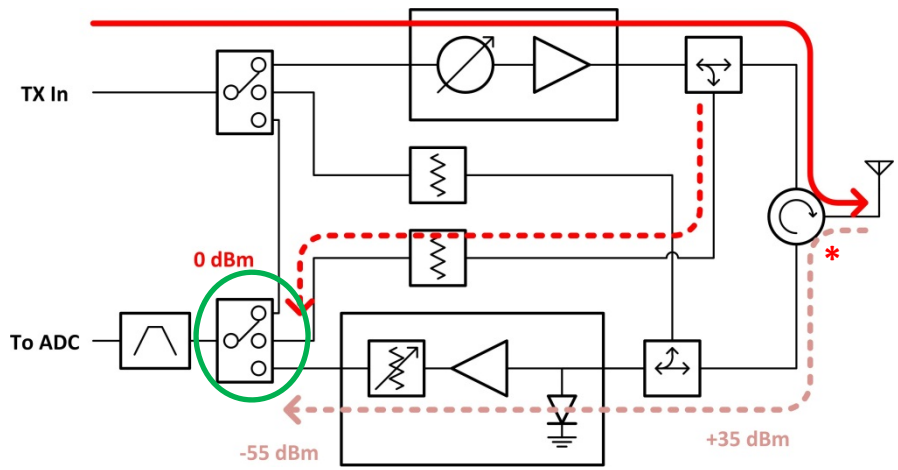

In-path switch directly relieves dynamic range requirements on receive chain

Conclusion: In-path switches need to be part of a multi-faceted solution to meeting the isolation requirement

* Working assumption is 15 dB return loss on antenna

This document has been reviewed for export control. Approved for public release and redistribution.

Linear Amplifier Switching

- Measured recovery times on previous receiver prototype
- RF Choke in MMIC prevents speedy switching

DC Switching **Attenuator Switching**

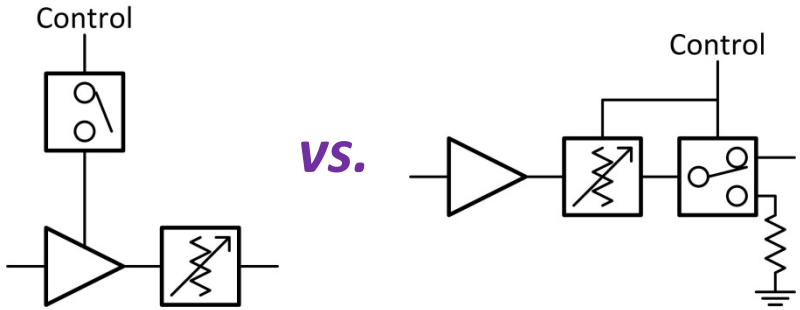

Recovery from DC Switching

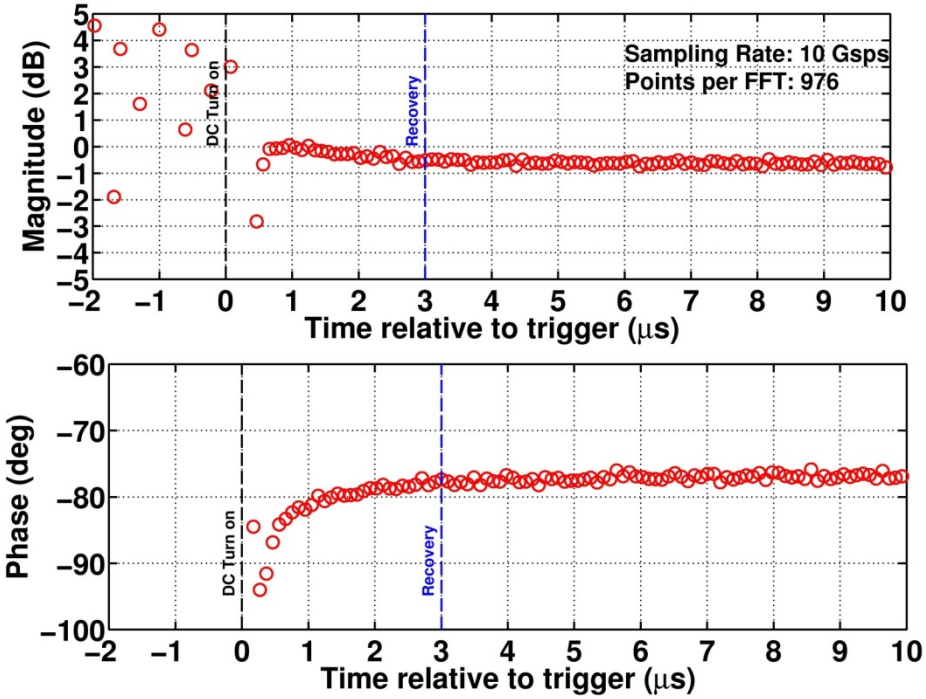

Recovery from Attenuator Switching

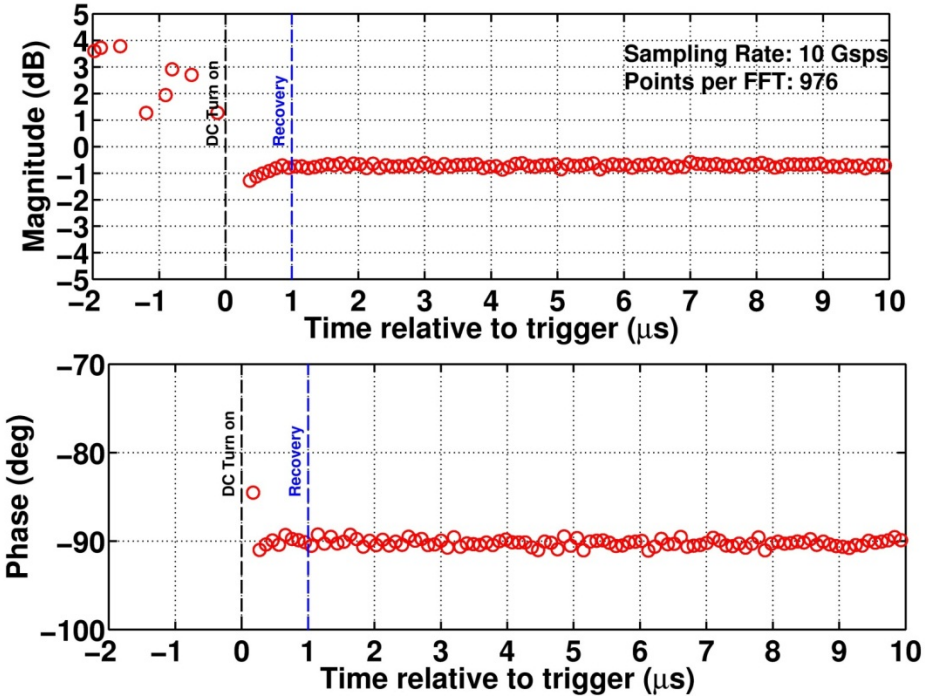

This document has been reviewed for export control. Approved for public release and redistribution.

Including the Circulator

- Circulator can be included in the calibration if the coupler is moved out to the antenna port
- Assuming 15 dB antenna return loss, coupler needs 60 dB isolation to meet requirements
- Technology limitation restricts couplers to around 40 dB isolation

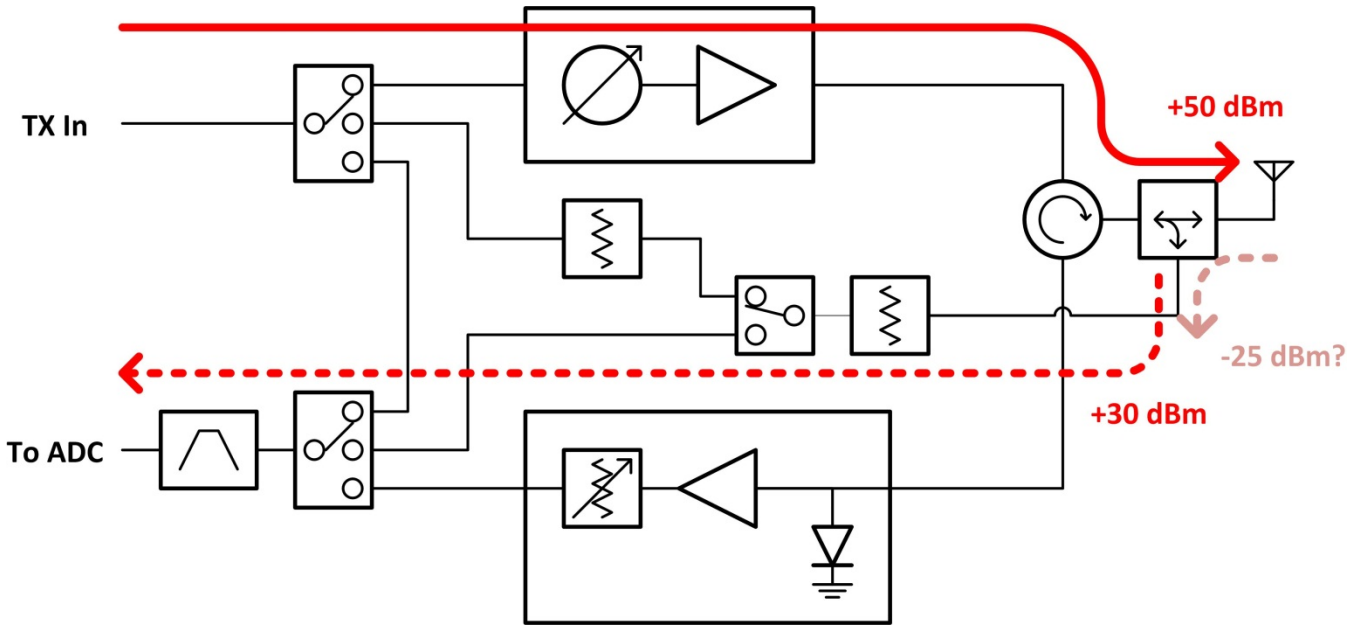

This document has been reviewed for export control. Approved for public release and redistribution.

Ghost Image Interference

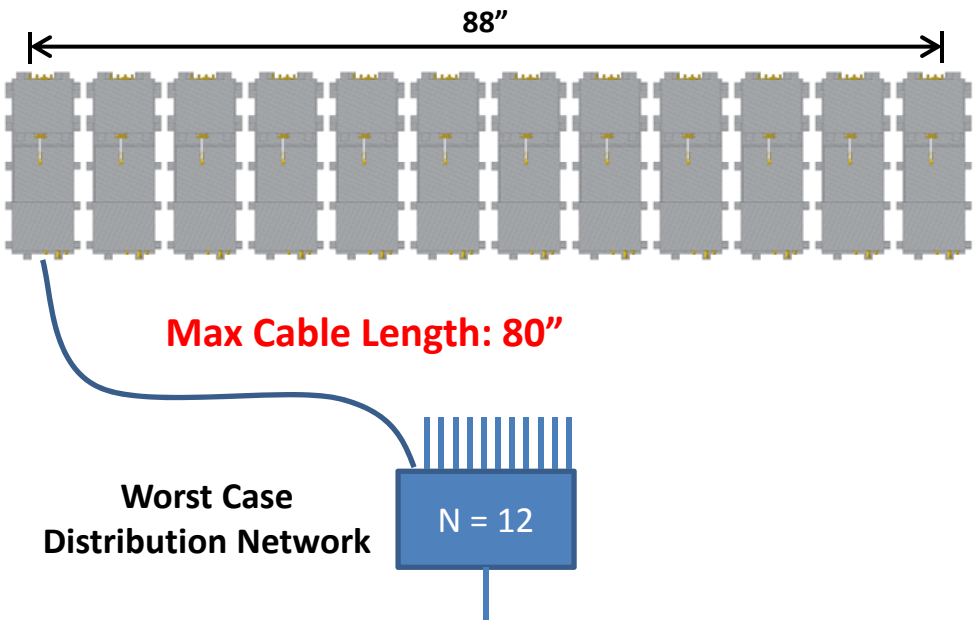

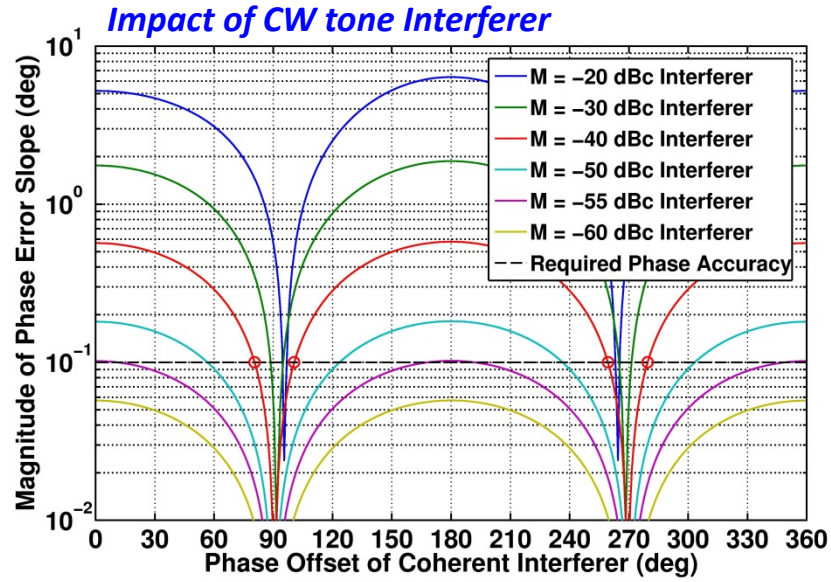

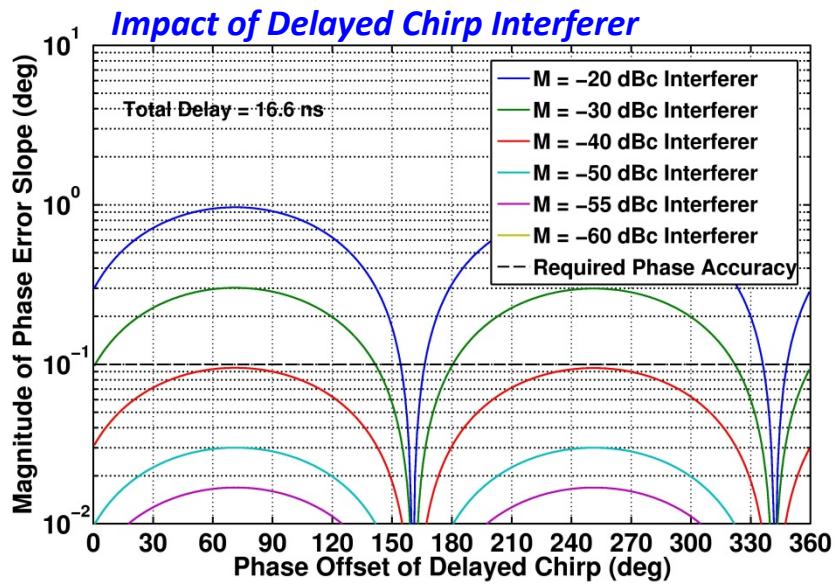

Reflection between T/R module and Distribution network introduce a true time-delay interferer at the T/R Module input:

- Signal is coherent and so will not average down
- Chirp is not as bad as CW because of matched filter

This document has been reviewed for export control. Approved for public release and redistribution.

Minimizing Reflection

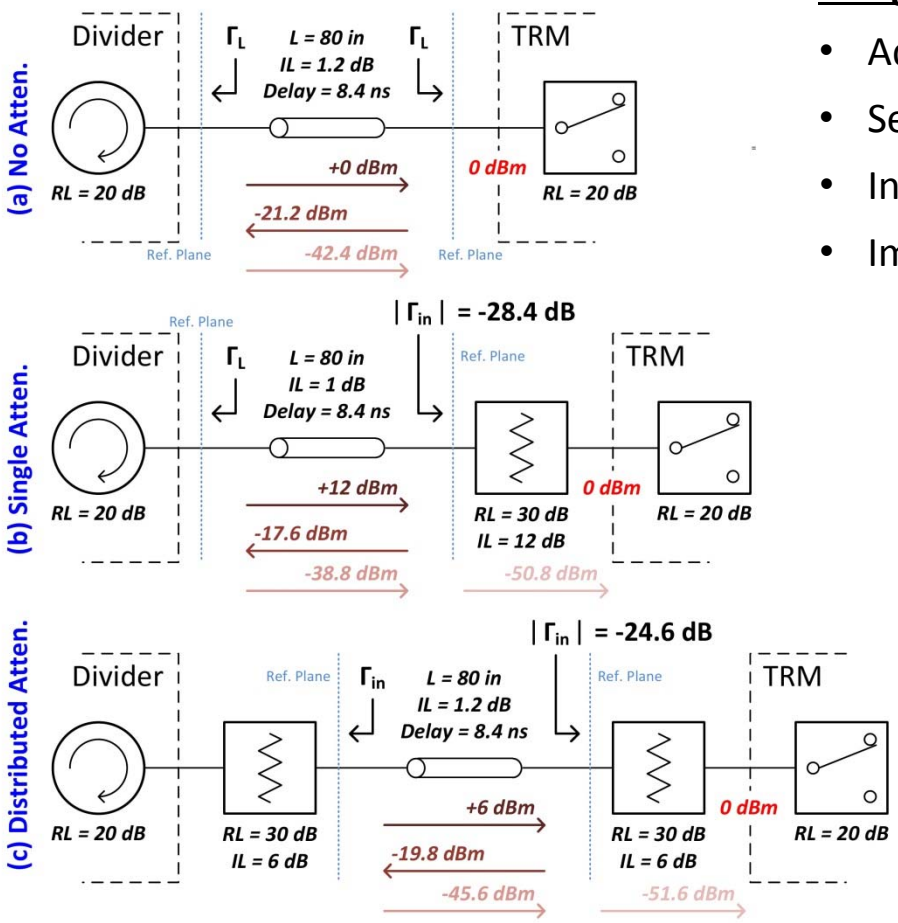

Mitigation Strategies:

- Add attenuation to increase rejection of reflected signal
- Set cable lengths to avoid regions of large phase change
- Increase UCA output to make up for increased loss
- Improve input return loss of TRM through matching

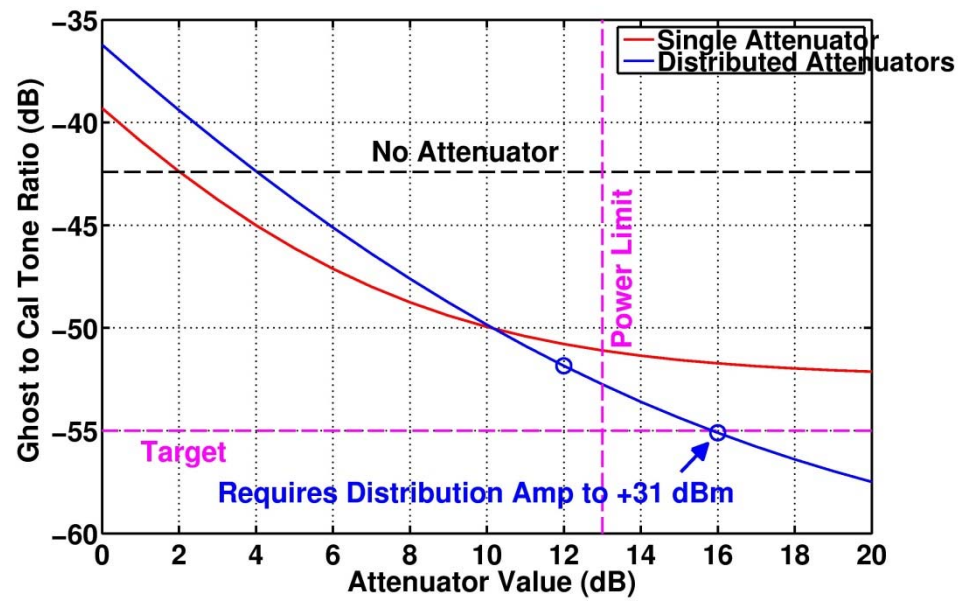

For Reference: $\Gamma_{in} = S_{11} + \frac{S_{12}S_{21}\Gamma_L}{1 - S_{22}\Gamma_L}$

This document has been reviewed for export control. Approved for public release and redistribution.

Design Philosophy

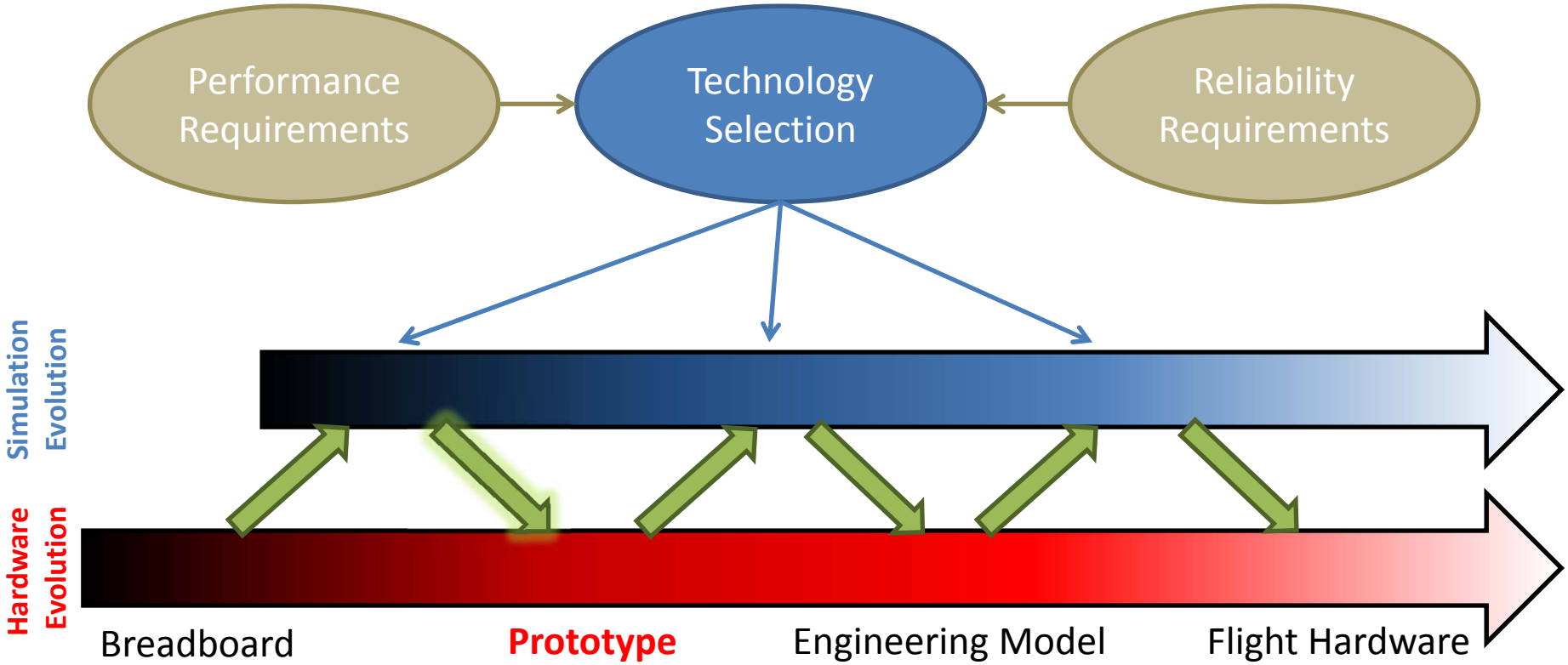

- Simulation is a clearinghouse for design changes developed *alongside* hardware
- Hardware is not dependent on simulation milestones, only informs the design

This document has been reviewed for export control. Approved for public release and redistribution.

Simulation Philosophy

- Simulations conducted in Agilent ADS
- Utilize hierarchy and polymorphism to tailor simulation fidelity to needs

Modeling Types

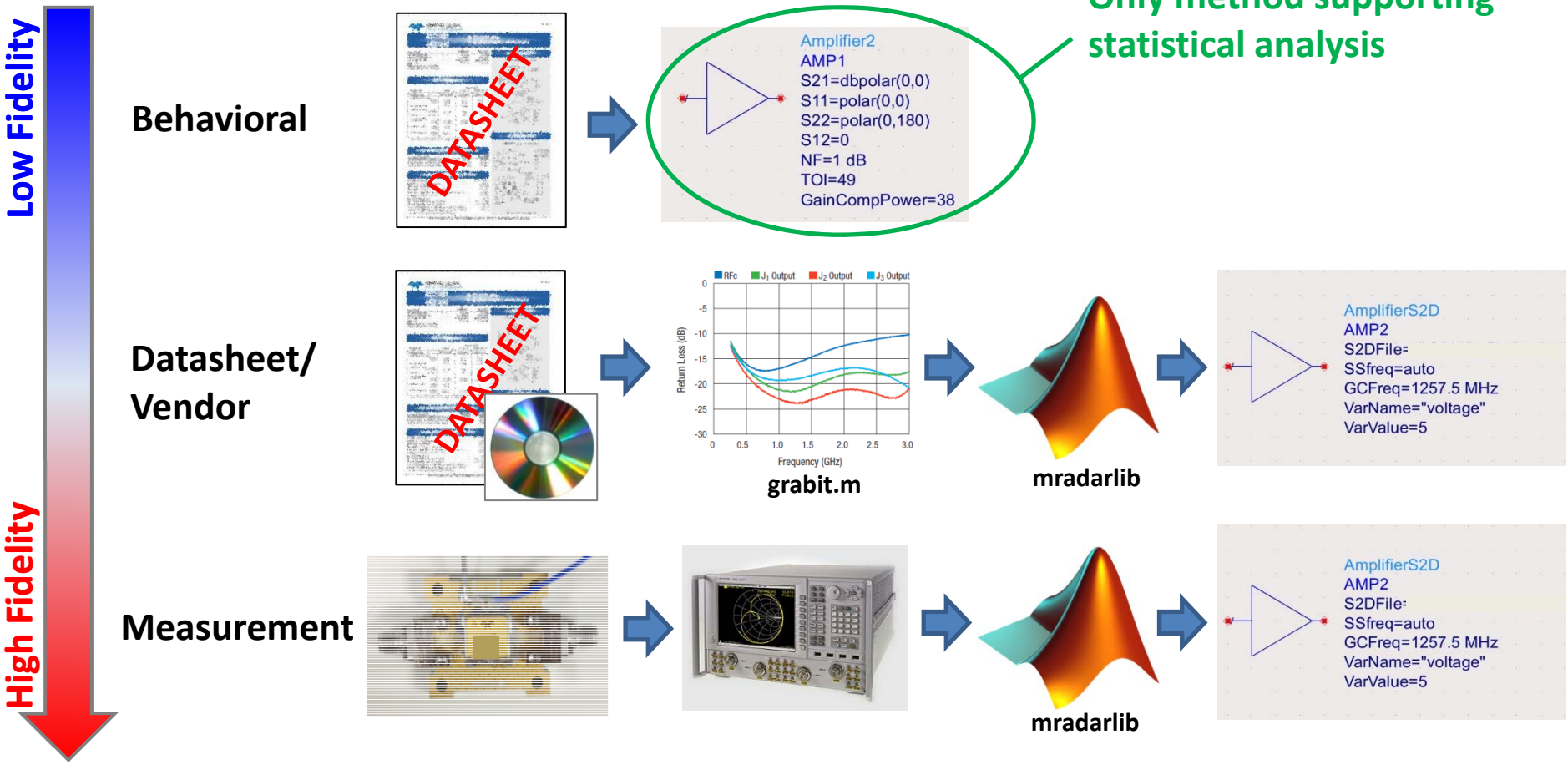

This document has been reviewed for export control. Approved for public release and redistribution.

TX Mode Simulations

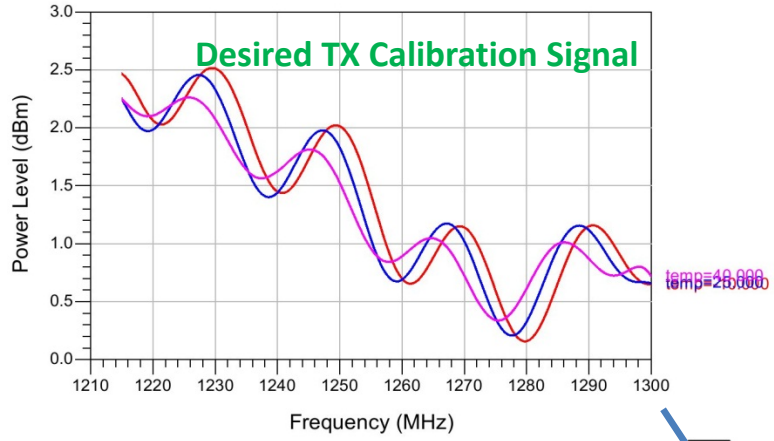

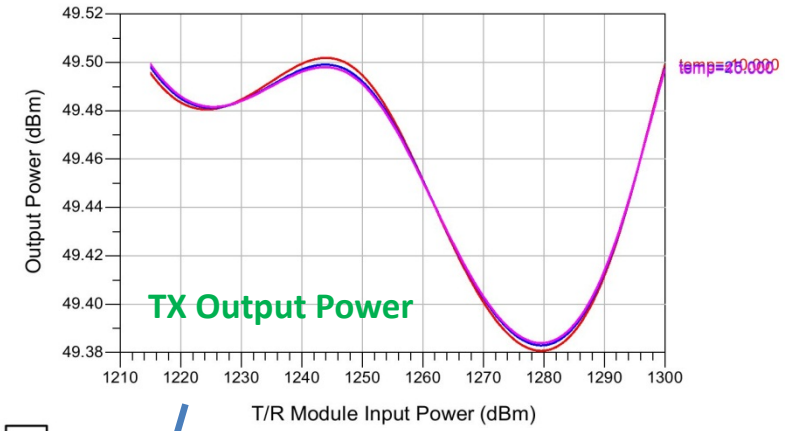

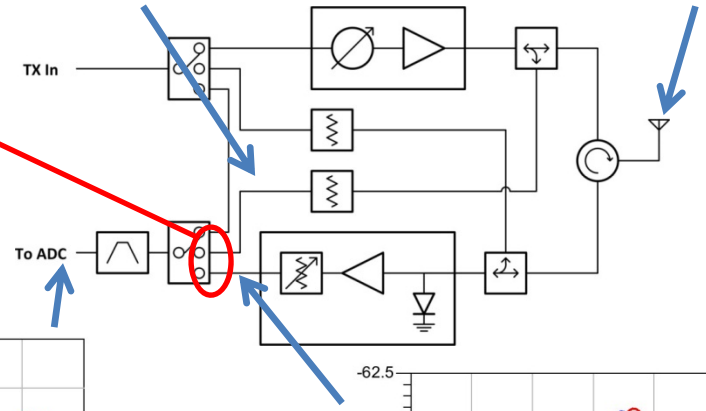

Isolation > 63 dB

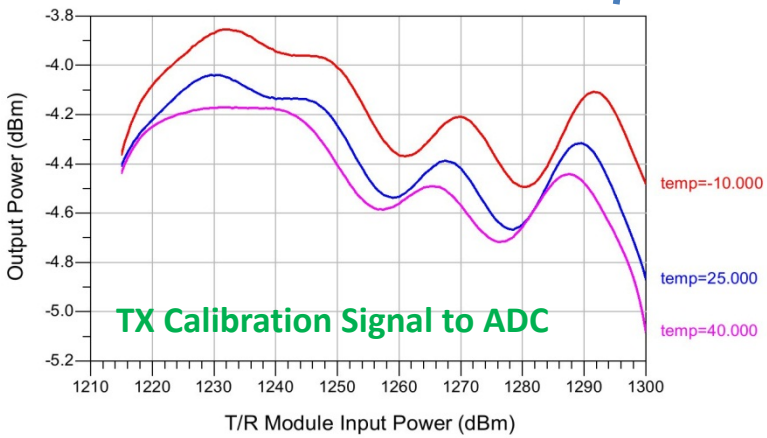

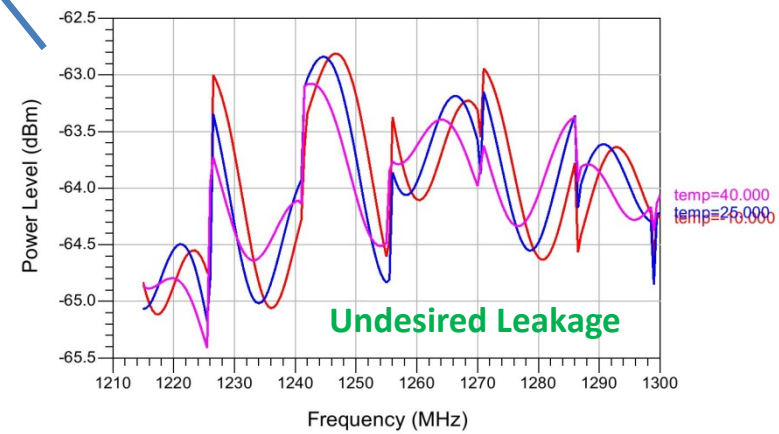

This document has been reviewed for export control. Approved for public release and redistribution.

RX Mode Simulations

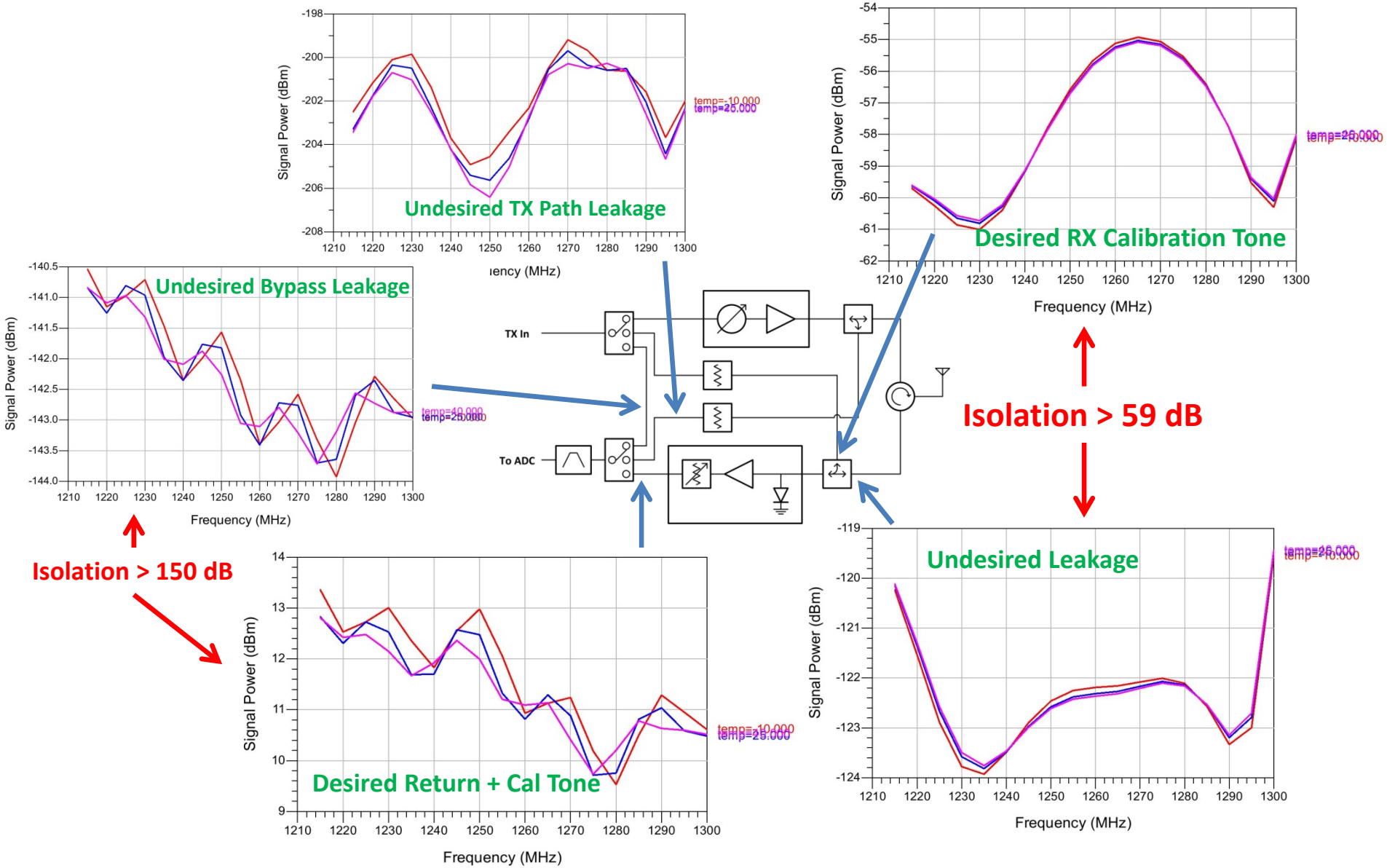

This document has been reviewed for export control. Approved for public release and redistribution.

Summary

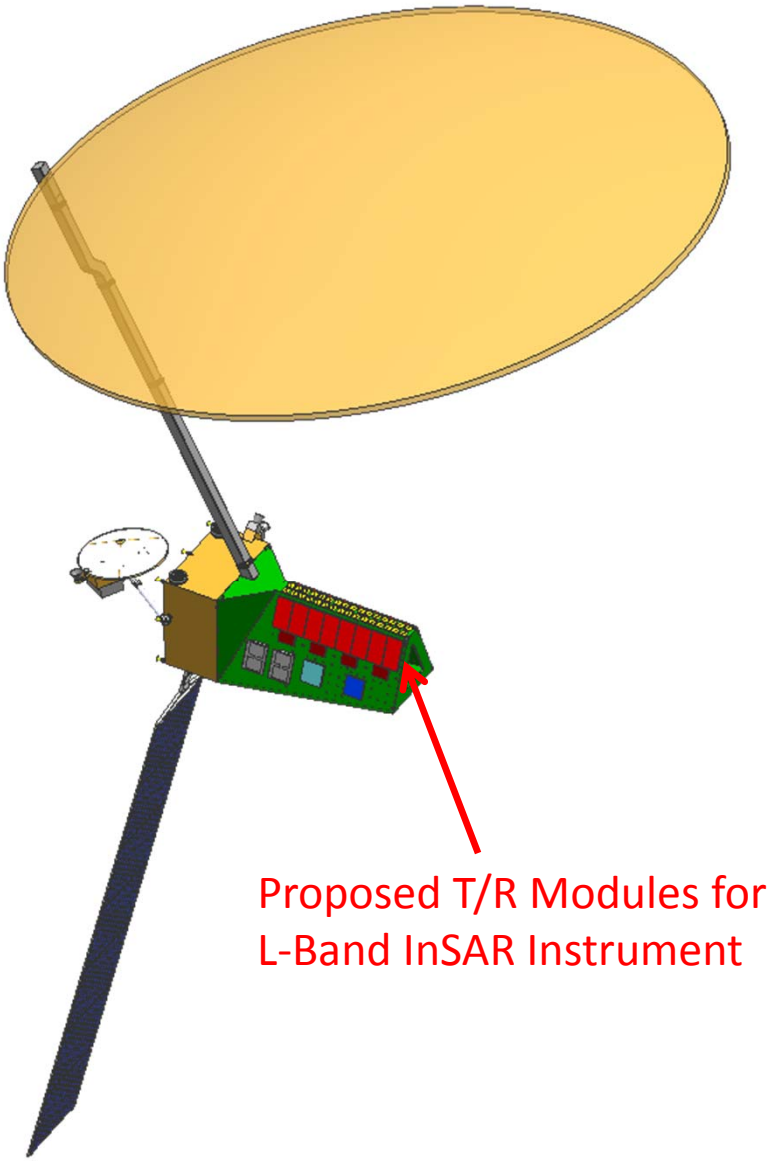

- Currently developing this T/R architecture for a proposed spaceborne L-band interferometric SAR instrument
- Features 12 T/R modules per polarization
- Direct digitization of each L-band channel via undersampling ADCs
- 12 m deployed reflector produces a 230 km swath, permitting 12-day repeat-pass times with full global coverage
- On-board digital beamforming uses 3 taps per beam and forms 3 simultaneous swept beams to track multiple return pulses
- Closed loop calibration performed in real-time on individual receive channels

This document has been reviewed for export control. Approved for public release and redistribution.