MONTE CARLO ANALYSIS OF THE COMMISSIONING PHASE MANEUVERS OF THE SOIL MOISTURE ACTIVE PASSIVE (SMAP) MISSION

Jessica L. Williams[(1)], **Ramachandra S. Bhat**[(2)], **and Tung-Han You**[(3)]

[(1)] *Jet Propulsion Laboratory, California Institute of Technology, 4800 Oak Grove Drive, Pasadena CA 91104, (818)354-3806, jessica.williams@jpl.nasa.gov*

[(2)] *Jet Propulsion Laboratory, California Institute of Technology, 4800 Oak Grove Drive, Pasadena CA 91104, (818)393-0979, ramachandra.s.bhat@jpl.nasa.gov*

[(3)] *Jet Propulsion Laboratory, California Institute of Technology, 4800 Oak Grove Drive, Pasadena CA 91104, (818)354-5745, tung-han.you@jpl.nasa.gov*

Abstract: *The Soil Moisture Active Passive (SMAP) mission will perform soil moisture content and freeze/thaw state observations from a low-Earth orbit. The observatory is scheduled to launch in October 2014 and will perform observations from a near-polar, frozen, and sun-synchronous Science Orbit for a 3-year data collection mission. At launch, the observatory is delivered to an Injection Orbit that is biased below the Science Orbit; the spacecraft will maneuver to the Science Orbit during the mission Commissioning Phase. The ΔV needed to maneuver from the Injection Orbit to the Science Orbit is computed statistically via a Monte Carlo simulation; the 99th percentile ΔV (ΔV99) is carried as a line item in the mission ΔV budget. This paper details the simulation and analysis performed to compute this figure and the ΔV99 computed per current mission parameters.*

Keywords: *Maneuver, ΔV99, Monte Carlo*

1.0 Introduction

The NASA Jet Propulsion Laboratory Soil Moisture Active Passive (SMAP) mission, developed in response to the 2007 National Research Council's Decadal Survey, will observe soil moisture content and the freeze/thaw state of the Earth's surface [1] [2]. The spacecraft, to be launched via a Delta II rocket out of Vandenberg Air Force Base, will inject to a specified target orbit and will propulsively maneuver to a near-circular ~ 685 km altitude Operational (Science) Orbit. A scheduled set of propulsive maneuvers is performed during the mission Commissioning Phase to maneuver the SMAP observatory from the Injection Orbit to the Science Orbit. The delta-velocity (ΔV) budgeted for these maneuvers is held as a line-item in the SMAP mission ΔV budget. The SMAP spacecraft is propellant-limited due to a maximum propellant tank capacity, and the ΔV for Commissioning per correction of 3-sigma (3σ) launch vehicle injection errors may be large. To reduce the ΔV carried in the propellant budget for Commissioning Phase maneuvers while still holding a high level of confidence in the figure, a statistical 99th percentile ΔV (ΔV99) is computed via Monte Carlo Analysis.

This paper details the Monte Carlo simulation development and statistical analysis used to determine the ΔV99 for Commissioning Phase maneuvers. The SMAP spacecraft and mission phases are described, with specific focus on Commissioning Phase activities and driving mission requirements that must be satisfied within the simulation framework. Development of the Analytical Commissioning Phase Simulation and the current set of mission parameters used in simulation is detailed. Statistical results are shown for the Monte Carlo data set of injected orbits.

The 99th%ile ΔV is compared to the ΔV computed for a 3σ injection case to illustrate the ΔV allocation reduction enabled by this analysis. Comparing the analytical simulation results to sample numerical integration and finite burn computation solutions validates the statistical $\Delta V99$.

2.0 SMAP Mission and Spacecraft Description

The SMAP Science Orbit is designed to be frozen and sun-synchronous with an orbit ascending node at 6:00 PM Local Mean Solar Time (LMST), providing repeat ground coverage every eight days. The repeat characteristics of the Science Orbit permit near-global measurements to be made every three days. A science orbit reference frame (SRF) is used for nadir-referenced pointing; this Cartesian right-handed system, centered at the observatory center of mass, directs the +Z axis towards geodetic nadir, places +X axis coplanar with the +Z axis and along the inertial velocity vector, and completes the right-handed orthogonal coordinate system by placing +Y opposite the orbit angular momentum vector.

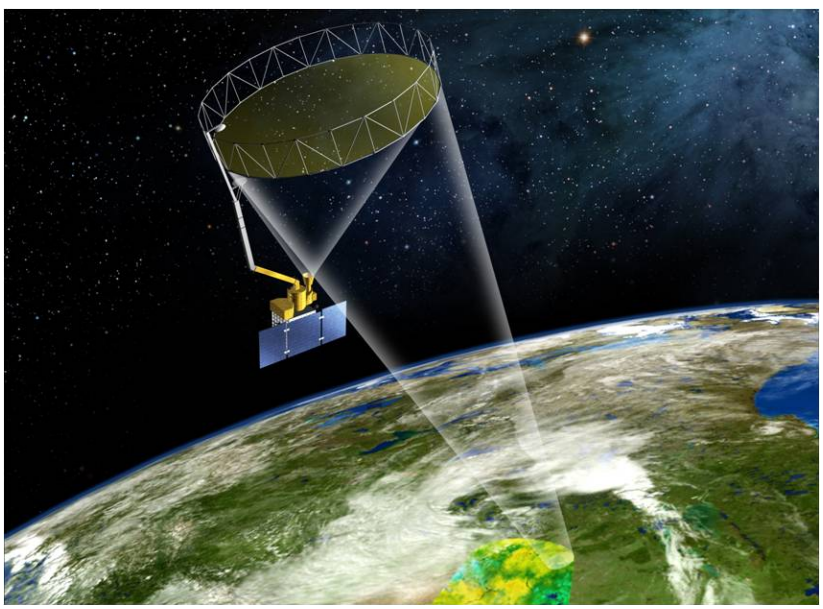

Figure 1: Artist's Concept of the SMAP Observatory.

The SMAP observatory utilizes a large (6-meter effective circular aperture) antenna for science observations in order to determine the moisture content of the upper soil and its freeze/thaw state. The SMAP mission data set will be used to improve our understanding of the hydrologic cycle. The deployed antenna observatory configuration is shown in Figure 1. Passive observations are conducted via an L-band radiometer that observes microwave emission from the upper soil. Active backscatter observations from the L-band radar provides improved spatial resolution of the mapping observations. Both the L-band radiometer and radar are housed in the rotating reflector antenna assembly.

The SMAP spacecraft is 3-axis stabilized; pointing control during nominal operations is performed via four momentum wheels. The SMAP spacecraft uses a blow-down propulsion system with eight 4.5 N thrusters, of which four thrusters are used for orbit adjustment and the remaining thrusters are used for attitude control during orbit adjustment and during spacecraft safeing events. The thrusters used for orbit adjustment are located on the spacecraft +Z deck. The spacecraft performs slews, via the momentum wheels, to rotate to a desired burn attitude. The SMAP spacecraft propellant tank holds a maximum of 80 kilograms of hydrazine, which is used to perform tasks all maneuvering tasks, including orbit acquisition, operational orbit maintenance, attitude control, and orbit disposal at the end of mission.

The propellant/ΔV needed to perform mission operations is tracked in the mission ΔV budget. The mission **Δ**V budget holds best estimates of expected propellant consumption as well as margin and operational contingency values. A large portion of the mission propellant is expected to be consumed during the orbit acquisition process; it is vital to estimate the propellant (**Δ**V) required for orbit acquisition to have confidence that all mission activities can be accomplished (with margin) within the propellant tank capacity. The ΔV allocated for the Commissioning Phase may be sized by correcting worst-case (3σ) launch vehicle injection errors. Given the injection orbit dispersion distribution per the Delta II launch vehicle, the Commissioning Phase ΔV may vary widely among sample cases. An alternate analysis is to allocate Commissioning Phase ΔV to 99% confidence, a figure that is smaller than the 3σ correction ΔV.

3.0 Mission Commissioning Phase

The four mission phases are: Launch, Commissioning, Science Observation, and Decommissioning. This paper focuses on activities that occur during the Commissioning Phase; the Commissioning Phase includes activities such as spacecraft and subsystem check-out, maneuvers to raise the observatory into the science orbit, and instrument boom and reflector deployment and spin-up.

The Commissioning Phase begins at the completion of the Launch phase. The launch vehicle will deliver the SMAP observatory to the injection orbit targets; spacecraft injection occurs at apoapsis at the orbit ascending equator. The current injection orbit apoapsis altitude is biased 10 km below the science orbit periapsis altitude in order to avoid possible re-contact of the spacecraft with the launch vehicle upper stage. The mean orbit target at injection as compared to the desired Science Orbit is described in Table 1.

Table 1: SMAP Injection Orbit Target and Science Orbit.

	Injection Orbit	**Science Orbit**
Semi-major Axis	7029.4 km	7057.5 km
Eccentricity	0.001222	0.001189
Inclination	98.1227 deg	98.1216 deg
Argument of Periapsis	180 deg	90.0 deg
Mean Anomaly	180 deg	-90.0 deg
Periapsis Height (H_p) at Equator	~ 643 km	~ 671 km
Apoapsis Height (H_a) at Equator	~ 660 km	~ 687 km
LMST at Ascending Equator	6:00 PM	6:00 PM
Earth Space True Equator Coordinate System, Mean Elements, Epoch = 31-OCT-2014 15:36:26.5037 ET		

During the Commissioning Phase the SMAP spacecraft will perform propulsive maneuvers to correct launch vehicle injection errors and transfer from the Injection Orbit to the Science Orbit. These maneuvers are used to adjust the orbit apses heights (H_p and H_a), to rotate the argument of periapsis (ω), and to correct orbit inclination. The final Commissioning Phase maneuvers are used to establish the sun-synchronous, frozen orbit geometry. All transfer maneuvers are to be performed during the 90-day Commissioning Phase timeline.

3.1 Commissioning Phase Maneuver Timeline

The Commissioning Phase maneuvers are to be performed on a fixed timeline relative to mission launch. The Commissioning Phase maneuvers are described in Table 1 and are shown as a timeline (relative to Launch) in Figure 2. Three types of maneuvers are described: CAL (calibration), INC (inclination change) and INP (in-plane change).

Following launch and initial check-out, the thrusters are calibrated in the observatory stowed configuration. The CAL1 maneuver is used for thruster calibration and is executed in-plane and at an orbit location that favorably corrects towards the Science Orbit. The first correction maneuver, INC1, will correct orbit inclination and, if favorable, will also include a burn component that will correct orbit apses heights and rotate the argument of periapsis towards the north pole. INC1 is performed at an orbit ascending or descending node. The INP1 maneuver(s) will correct orbit apses heights and argument of periapsis. The INC2 maneuver is used for final orbit inclination clean-up. Following a stand-down period, during which the observatory antenna is deployed and spun up, a second calibration maneuver (CAL2) is performed in the observatory-deployed configuration; the maneuver favorably corrects towards the Science Orbit. The INP2 maneuvers are then used for fine orbit adjustment and to tune the orbit ground track in order to achieve the Science Orbit configuration requirements. Note that the orbit longitude of node (the achieved orbit Local Mean Solar Time) is not planned to be corrected during the Commissioning Phase; the mission LMST is achieved via the injected state and launch Epoch.

Table 2: Commissioning Phase Propulsive Maneuvers.

Name	Timing	Orbit Change	Maneuver Description
CAL1	Day 10	H_p, H_a	Thruster calibration, in-plane maneuver, along velocity vector
INC1	Day 18	inc, H_p, H_a, ω	Out-of-plane maneuver, may include an in-plane component
INP1a,b,c	Day 22	H_p, H_a, ω	In-plane maneuver, along velocity vector
INP1d,e,f	Day 26	H_p, H_a, ω	In-plane maneuver, along velocity vector
INC2	Day 30	inc	Out-of-plane maneuver
CAL2	Day 52	H_p, H_a, ω	Thruster calibration, in-plane maneuver, along velocity vector
INP2a	Day 60	H_p, H_a, ω	In-plane maneuver, along velocity vector
INP2b	Day 64	H_p, H_a, ω	In-plane maneuver, along velocity vector

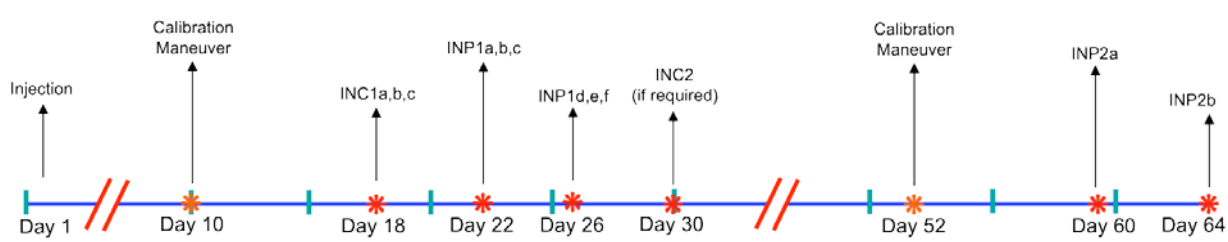

Figure 2: Commissioning Phase Maneuver Timeline

3.2 Maneuver Attitudes

Two types of nominal attitudes (burn attitudes) are planned for maneuver implementation:

- ***In-Plane maneuver***: in-plane maneuvers are implemented along the spacecraft velocity (or anti-velocity) vector. These maneuvers are used to correct orbit semi-major axis (orbit apses heights) and are implemented at the orbit periapsis or apoapsis. A rotation in the argument of periapsis (ω) is achieved if the maneuver true anomaly is offset from implementation at an apsis. The CAL1, CAL2, INP1 and INP2 maneuvers are planned to be implemented in this burn attitude
- ***Out-of-Plane maneuver***: out-of-plane maneuvers are implemented along the spacecraft angular momentum (or anti-angular momentum) vector. These maneuvers are used to correct orbit inclination and are implemented at the orbit ascending or descending node. The INC1 and INC2 maneuvers are planned to be implemented in this burn attitude.

Additionally, a ***Combination maneuver*** is possible. A combination maneuver contains both in-plane and out-of-plane maneuver components. Combination maneuvers are used to correct orbit inclination, orbit semi-major axis and orbit argument of periapsis. Combination maneuvers are implemented at the orbit ascending or descending node in order to most efficiently correct orbit inclination. Only the INC1 maneuver may be implemented in this burn attitude.

3.3 Propulsive Maneuver Constraints

The Commissioning Phase maneuvers (as well as all other propulsive maneuvers performed during spacecraft operations) are constrained by both operational and spacecraft health and safety considerations. Two key constraints impacting maneuver design are maximum maneuver duration and minimum maneuver magnitude limits.

3.3.1 Maximum Maneuver Duration

Observatory constraints impose maximum burn durations on both out-of-plane and in-plane maneuvers. The out-of-plane maneuvers are limited by a maximum duration off-sun angle constraint (instrument-stowed thermal constraint), of which a given interval is reserved for slews to and from the burn attitude; the remaining possible burn time, per the current propulsion system configuration, translates to a maximum burn magnitude of 7 m/s. The in-plane maneuvers are limited to a maximum duration in order to avoid large IMU drift rates during retrograde burns; the possible burn time translates to a burn magnitude of 10 m/s. Additionally, for both in-plane and out-of-plane maneuvers, it is desirable to not perform long duration burns in order to minimize gravity losses.

Some injected orbits may require corrections that are larger than the maximum permissible maneuver magnitudes. To achieve the Science Orbit using the Commissioning Phase maneuver strategy and schedule, while satisfying maneuver magnitude constraints, a maneuver segmentation strategy is developed. Individual maneuvers may be split into multiple segments, each executed between 2-3 orbits apart. A maximum of three segments may be performed in a single day. For example, the maneuver INC1 may be split in to segments INC1a, INC1b and INC1c if needed. Downstream maneuver segments (i.e., INC1b and INC1c) will not be re-designed following execution of previous segments; rather, tracking data may be evaluated post-

burn and a "go/no-go" is given for executing the next maneuver segment. Initial analysis shows that segmentation need only be applied to the INC1 and INP1 maneuvers.

3.3.2 Minimum Maneuver Magnitude

Currently, the minimum maneuver magnitude that may be performed by the spacecraft (while still adhering to a prescribed accuracy model) is 12.5 cm/sec. To implement maneuvers that are smaller than the minimum maneuver magnitude, a strategy called "Pitch Biasing" is developed. With this strategy, the maneuver attitude is biased such to contribute a component that is smaller than the minimum magnitude along the desired direction. The total maneuver magnitude is equal to the minimum maneuver magnitude.

4.0 Analytical Commissioning Phase Simulation

To model and simulate many different transfer sequences, and to size the Commissioning Phase ΔV budget to 99% confidence, a simulation algorithm has been designed to autonomously correct launch vehicle injection errors and transfer the spacecraft to the Science Orbit using the fixed sequence of Commissioning Phase maneuvers. The algorithm constructed to simulate the Commissioning Phase maneuvers is referred to as the Analytical Commissioning Phase Simulation. The simulation is run many times, using statistically sampled input parameters, in order to perform Monte Carlo analysis.

4.1 Simulation Motivation and Goals

The simulation development was motivated by the desire to decrease the ΔV allocated for Commissioning Phase maneuvers in the mission ΔV budget. This was particularly important in early mission development, when Commissioning Phase maneuvers for 3σ injection dispersion correction and orbit transfer were expected to consume a majority of the propellant tank capacity. Allocating the 99th percentile correction in the ΔV budget, instead of the 3σ correction, could keep the mission ΔV budget below the propellant tank capacity while still maintaining a high degree of confidence in the figure.

During development of the simulation algorithm, several goals were kept in mind:

- The simulation should ideally be compatible with other Navigation software.
- The simulation should run without external user input (once initialized).
- The simulation should run quickly.
- The simulation should be adaptable to changes in mission parameters.
- Monte Carlo data set should produce statistical data, including the $\Delta V99$ but also including other statistically useful information (such as individual maneuver magnitudes).
- The simulation results should be comparable to the solutions obtained via finite burns and numerical integration (i.e., the autonomous orbit transfer should be similar to the orbit transfer designed by a maneuver analyst during spacecraft operations).

The Analytical Commissioning Phase Simulation incorporates all of the above goals into the simulation framework.

4.2 Simulation Dynamics

Analytic models are used for dynamic modeling in the **Analytical Commissioning Phase Simulation**. Expressions for impulsive maneuvers are derived via two-body dynamics. State propagation includes Earth gravity harmonics and atmospheric drag.

4.2.1 Maneuver Dynamics

Expressions for the change in orbital elements as functions of the change in orbit velocity are developed via two-body dynamics. Maneuvers (spacecraft velocity changes) can be expressed in a RTN (Radial-Transverse-Normal) coordinate system centered at the spacecraft; the radial (R) direction is radially-directed, the transverse (T) direction is in the direction of the spacecraft velocity vector and is perpendicular to the radius vector, and the normal (C) direction is along the spacecraft angular momentum vector [3]. The change in velocity due to an applied force can be expressed vectorially in the RTN coordinate system as Eq. 1:

$$\Delta\mathbf{V} = \begin{Bmatrix} \Delta V_R \\ \Delta V_T \\ \Delta V_C \end{Bmatrix} = \begin{Bmatrix} F_R \\ F_T \\ F_C \end{Bmatrix} \Delta t = \mathbf{F}\Delta t \qquad \text{(Eq. 1)}$$

Analytical expressions for a change in mean Keplerian orbit elements per an impulsive ΔV applied are expressed as Eq. 2-5 [4] [5]. Here, r is the radial distance of the satellite, ν is the orbit true anomaly and $u = \omega + \nu$ is the argument of latitude. Re-arranging these expressions yields the ΔV required per a desired orbit element change. The change in apses heights (ΔH_p and ΔH_a) can be expressed via changes in orbit semi-major axis and orbit eccentricity. The desired orbit node (per the 6:00 PM LMST at the ascending node) is to be accomplished via launch epoch and no correction is planned (Eq. 5).

$$\Delta a = \frac{2}{n}\left[\Delta V_R \frac{e\sin\nu}{\sqrt{1-e^2}} + \Delta V_T \frac{a}{r}\sqrt{1-e^2}\right] \qquad \text{(Eq. 2)}$$

$$\Delta e = \frac{\sqrt{1-e^2}}{na}\left[\Delta V_R \sin\nu + \Delta V_T \frac{a}{er}\left(1-e^2-\frac{r^2}{a^2}\right)\right] \qquad \text{(Eq. 3)}$$

$$\Delta i = \Delta V_C \frac{r\cos u}{na^2\sqrt{1-e^2}} \qquad \text{(Eq. 4)}$$

$$\Delta\Omega = \Delta V_C \frac{r\sin u}{na^2\sqrt{1-e^2}\sin i} \qquad \text{(Eq. 5)}$$

$$\Delta\omega = -\frac{\sqrt{1-e^2}}{nae}\left[\Delta V_R \cos\nu - \Delta V_T\left(1+\frac{r}{a}\frac{1}{1-e^2}\right)\sin\nu + \Delta V_C \frac{r}{a}\frac{e\cot i\sin u}{1-e^2}\right] \qquad \text{(Eq. 6)}$$

$$\Delta M = \frac{\left(1-e^2\right)}{nae}\left[\Delta V_R\left(\cos f - \frac{r}{a}\frac{2e}{1-e^2}\right) - \Delta V_T\left(1+\frac{r}{a}\frac{1}{1-e^2}\right)\sin f\right] \qquad \text{(Eq. 7)}$$

4.2.1.1 Out-of-Plane Maneuver Sizing

The out-of-plane maneuvers are designed to correct orbit inclination. An inclination change maneuver is most efficiently performed at $u = 0$ (ascending or descending equator crossing). In the simulation, out-of-plane maneuvers are always performed at an equatorial crossing. For a desired inclination change Δi, the required ΔV_C is computed directly via Eq. 4.

4.2.1.2 In-Plane Maneuver Sizing

The in-plane maneuvers are designed to either correct orbit apses heights or to simultaneously correct orbit apses heights and argument of periapsis. In-plane maneuvers are applied only in the direction of the spacecraft velocity vector; no radial maneuver component is included. If an orbit apsis height change is the only change desired, the maneuver is placed at an orbit apsis and the correction is found directly via Eq. 2 and Eq. 3. If an argument of periapsis rotation is also desired (Eq. 6), a search algorithm is applied in order to obtain the maneuver design (v, ΔV_T) that accomplishes (or accomplishes close to) the desired change (ΔH_p, ΔH_a, $\Delta\omega$).

4.2.1.3 Combination Maneuver Sizing

The INC1 maneuver may be designed as a combined maneuver in order to simultaneously correct orbit inclination as well as orbit semi-major axis, eccentricity, and argument of periapsis. It contains both out-of-plane and in-plane components. The combination maneuver is always applied at the orbit ascending or descending equator crossing ($u = 0$), so only the in-plane maneuver component will induce a rotation of the argument of periapsis. The required ΔV_C for the desired inclination change Δi is computed directly via Eq. 4; the in-plane correction is sized using Eq. 2 and Eq. 3 without violating the maximum maneuver magnitude limit.

4.2.2 State Propagation

Expressions for the rate of change of a mean Keplerian state over a time interval ΔT between maneuver dates are used for state propagation. The perturbing accelerations used in state propagation are atmospheric drag and Earth zonal harmonics. These are the dominant perturbations on the low-altitude SMAP orbit. Third body accelerations (lunar and solar perturbations), as well as accelerations due to solar radiation pressure, are ignored.

For computing the acceleration due to atmospheric drag, atmospheric density is computed via the Naval Research Laboratory's Mass Spectrometer and Incoherent Scatter Radar (MSIS) model. MSIS is an empirical, global model of the Earth's atmosphere [6]. The atmospheric density is computed at a desired orbit geodetic latitude, longitude and height. The Marshall Space Flight Center's Solar Activity f10.7 solar flux table is used as a model input [7]. Using the definition of orbit energy and assuming that the force due to atmospheric drag is acting along the spacecraft velocity vector, the change in semi-major axis over a (short) finite time interval (δt) due to atmospheric drag is computed [3]. For computing the acceleration due to a non-spherical Earth, zonal harmonics through J_6, as well as second order terms in J_2, are included as perturbing accelerations. Mean orbit elements are used in propagation. Expressions for secular effects due to Earth zonal harmonics are formed via the Lagrange planetary equations for the change in argument of periapsis, longitude of node and mean anomaly over a short (finite) time interval (δt) [3]. The change in orbit element over a short time interval (δt) is advanced to obtain a change in orbit elements over the time interval between maneuver epochs (Δt).

4.3 Simulation Flowchart

The Analytical Commissioning Phase Simulation algorithm is written in Python and utilizes a number of standard Python libraries as well as the numerous custom-written function calls. It is run as a stand-along executable program. A single file contains mission parameters that may be treated as independent variables in the simulation, such as the injection orbit target, the spacing of maneuvers, and the maximum maneuver magnitude, among many others. The algorithm reads parameters from this common file for simulation execution. A flowchart of the analytical simulation is shown in Figure 3.

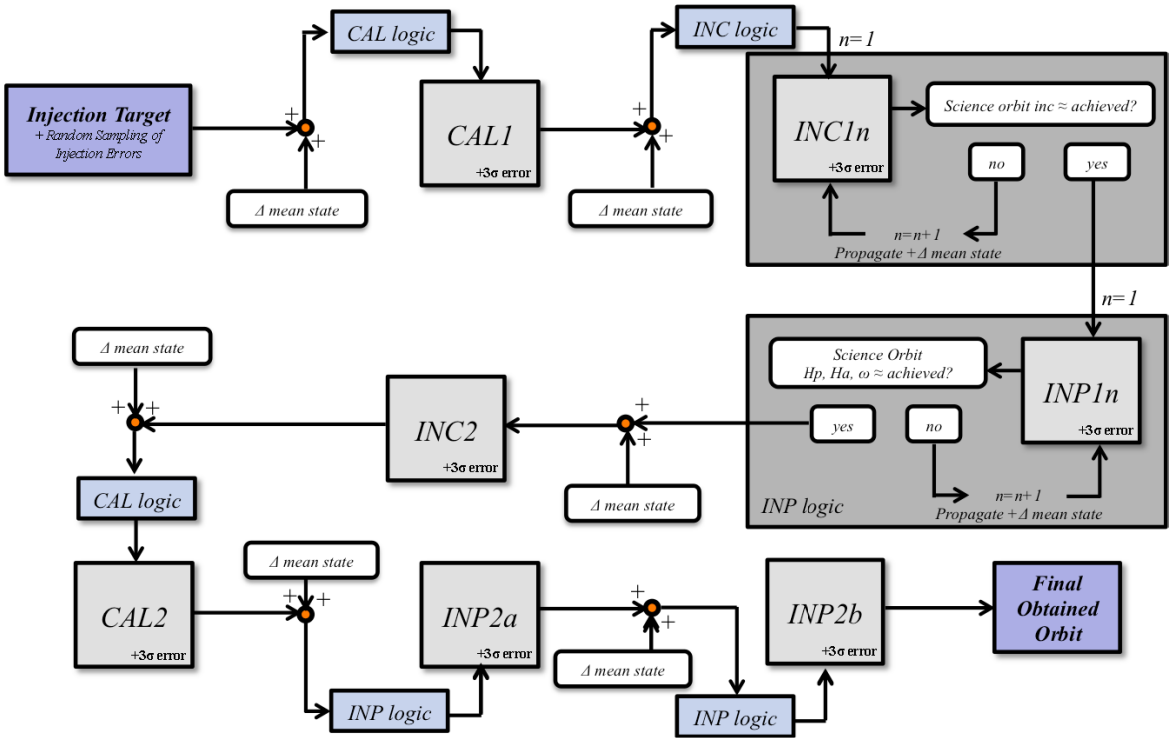

Figure 3: Simulation Flowchart.

The spacecraft state is initialized at injection by sampling the injection dispersions of the launch vehicle. The spacecraft state is propagated between fixed maneuver dates using the analytical mean element rate equations. At each maneuver location, a maneuver magnitude, orientation, and orbit location is designed via a series of "logic" statements (to be discussed). For conservative budgeting purposes, implemented maneuvers include 3σ maneuver execution error. At the end of the Commissioning Phase maneuver sequence, the Science Orbit is achieved. If a simulated case does not achieve the desired targets (to within some small tolerance), the algorithm parameters may be adjusted slightly and the case re-simulated.

Because the spacecraft state is propagated in the analytical simulation as a function call, an alternate orbit propagator (such as a numerical integrator) may be substituted for orbit propagation. It is also possible to substitute models for alternate central body (such as Mars). If used for analysis on another mission, re-evaluation of the analytical models used should be performed. State propagation of orbital elements has been compared to a state propagated via

trajectory integration using numerical models that is then converted to mean orbit elements; the state propagation agrees well provided that the time interval δt between state updates is short. An appropriate time interval δt between state propagation times is a compromise between simulation speed and propagation accuracy.

4.4 Simulation Logic

Simulation "logic" evaluation, shown as blocks in the simulation flowchart, function as an in-the-loop maneuver analyst who would design each maneuver given the current spacecraft state. The logic statements are written as a series of rules that function in roughly the same fashion as if a maneuver analyst was assessing the current orbit conditions and applying a desired correction at each maneuver epoch. A number of solution algorithms can be used for maneuver design- these logic statements are continuously re-evaluated. The simulation logic produces feasible (but not necessarily) optimal maneuver solutions to the orbit transfer per the imposed mission constraints.

4.4.1 CAL Logic

Calibration maneuvers are always implemented at an orbit apsis and are applied in a direction that favorably corrects towards the Science Orbit. The Calibration logic, or CAL logic, observes the current state and chooses the appropriate apsis height to correct using the fixed magnitude calibration correction.

4.4.2 INC Logic

Prior to performing an inclination correction, the algorithm examines the current inclination error and determines the ΔV_C required to correct Δi. If this ΔV_C is larger than the maximum permissible maneuver magnitude, the total ΔV_C correction is split equally among multiple segments. In a combined maneuver, the maneuver magnitudes and attitudes of the in-plane and out-of-plane components are combined via root-sum-square. The out-of-plane correction is designed first, per Eq. 4. If the required correction ΔV_C is less than the maximum ΔV permissible for the out-of-plane maneuver (ΔV_{max}), the maximum possible in-plane component is sized via Eq. 8. Given additional simulation constraints, the algorithm may re-size the in-plane correction (ΔV_T). After the in-plane maneuver has been sized, the "logic" statements are used to appropriately evaluate the in-plane component.

$$\Delta V_T = \sqrt{\Delta V_{\max}^2 - \Delta V_C^2} \qquad \text{(Eq. 8)}$$

4.4.3 INP Logic

If a simultaneous apsis height correction and argument of periapsis rotation is desired, then the ΔH_p (or ΔH_a) correction is prioritized. The INP logic is used to design the appropriate magnitude ΔV_T. The full ΔV_T to achieve a desired ΔH is initially computed. The INP logic then allows the maneuver magnitude to decrease or increase by up to a specified tolerance and the true anomaly of the maneuver to move off the apsis by up to a pre-specified maximum number of degrees in order to achieve a desired rotation of the argument of periapsis. A grid search of these parameter ranges is performed to determine the (ν, ΔV_T) combination that achieves the desired argument of periapsis rotation. The solution that best accomplishes the desired changes is either used as the maneuver magnitude and orbit location or is used as the initial guess to the optimization of $\Delta\omega = 0$ (Eq. 6) using the Python function `scipy.optimize.fmin()` to obtained a refined solution.

4.5 Simulation Parameters

The simulation results are dependent on the simulation input parameters, including the injection orbit dispersion model and the maneuver execution error model. The Analytical Commissioning Phase Simulation is constructed such that all mission parameters are read from a central input file that is external to the simulation code. This separation permits quick modification of key simulation parameters. Other simulation constraints, such as minimum and maximum maneuver magnitudes, have been previously discussed.

4.5.1 Injection Dispersions Model

A preliminary assessment of the Delta II launch performance has been performed. At present, 3σ uncorrelated injection dispersions (per the launch vehicle User's Guide) are used for analysis, with additional supplementary information per the Falcon 9 Planners Guide. The uncorrelated dispersions are randomly sampled (assuming a Gaussian distribution) to compose an initial set of 5000 injection orbits. The assumptions used for the analysis are shown in Table 3. The Injection Orbit has also been designed using these uncorrelated injection dispersions. Future analysis (including redesign of the Injection Orbit) will use a correlated injection covariance matrix (ICM) delivered from the launch vehicle provider.

Table 3: Delta II Payload Planners's Guide Uncorrelated Injection Dispersions.

Component	Uncorrelated Dispersion (3σ)
Periapsis Height	± 10 km
Apoapsis Height	± 10 km
Inclination	± 0.1 degrees
Argument of Periapsis	± 30 degrees

4.5.2 Maneuver Execution Error Model

The primary purpose of the Analytical Commissioning Phase Simulation software is to produce a ΔV to be carried from Commissioning Phase budgeting. To conservatively size the sequence ΔV requirements, all maneuvers in the analytical simulation are executed with 3σ execution error. Maneuver implementation (execution) error is modeled via Gates model parameters (Table 4). Maneuver execution error is applied in an "unfavorable" direction such that maneuver execution error does not favorably correct the orbit (and favorably, but incorrectly, decrease the ΔV required for transfer).

Table 4: Gates Model Maneuver Execution Error Parameters.

Component	Pre-Calibration Values	Post-Calibration Values
Fixed Magnitude Error	12.5 mm/s	12.5 mm/s
Proportional Magnitude Error	10.0 %	3.0 %
Fixed Pointing Error	12.5 mm/s	12.5 mm/s
Proportional Pointing Error	2.0° (ΔV < 0.5 m/sec) /1.0°	1.0° (ΔV < 0.5 m/sec) /0.5°

5.0 Simulation Results

The Monte Carlo analysis of the Analytical Commissioning Phase Simulation is performed using a data set of 5000 sampled injection orbits. Statistical analysis is performed as post-processing on the saved transfer results. When the simulation statistics are compiled, an additional 5% ΔV (magnitude) is added to each individual maneuver to account for the transformation from an impulsive burn design to a finite burn implemented. The 99th percentile ΔV is used to size the Commissioning Phase ΔV allocation in the Mission ΔV budget. Simulation validation is performed by simulating select sample injection orbit cases via finite burns and numerical integration of the spacecraft state between maneuver epochs.

5.1 Simulation Orbit Transfer

All 5000 sample cases were successfully transferred from the dispersed injection state to the Science Orbit. The evolution of the orbit apses heights and orbit e-ω following execution of key large maneuvers is shown in Figure 4. The orbit apses heights are plotted in Figure 4(a) and the orbit e-ω is plotted in Figure 4(b). In the simulation, a majority of orbit corrections have been performed following the completion of all INP1 segments.

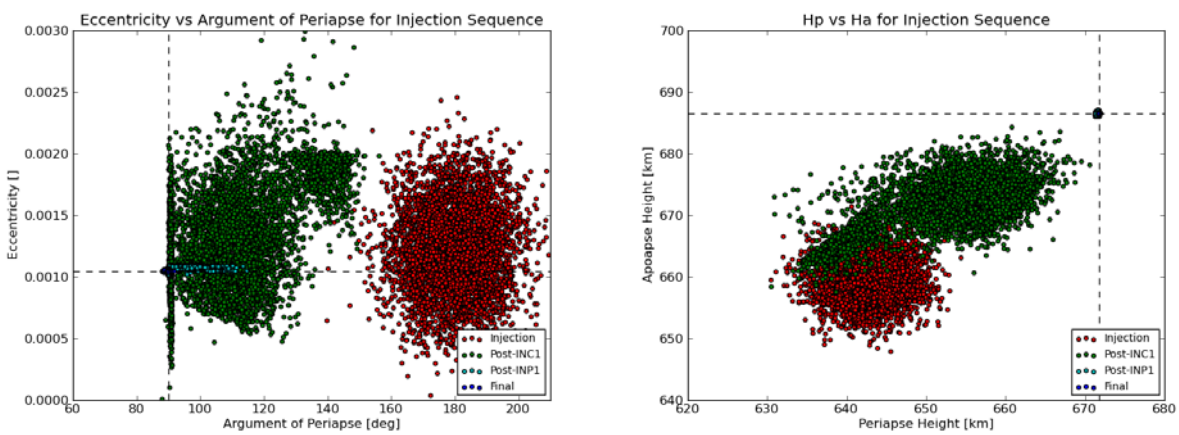

(a) Eccentricity – Argument of Periapsis (b) Peiapsis Height – Apoapsis Height

Figure 4: Distribution of (a) Mean Argument of Periapsis and Eccentricity and (b) Distribution of Apses Heights for Monte Carlo Simulation (5000 Sample Cases Shown).

5.2 Simulation Statistics

An alternative to the Monte Carlo analysis performed is to simply budget the ΔV required to correct 3σ (worst-case) launch vehicle injection errors. The ΔV required to correct worst-case injection orbit injection errors (ΔH_p = -10 km, ΔH_a = -10 km, Δi = 0.1 degrees, Δω = 150 degrees, per Table 3) is 31.5 m/sec. The ΔV99 obtained per the current simulation parameters is 25.4 m/s. The ΔV that can be held with 99% confidence for Commissioning Phase maneuvers is 20% reduced from 3σ injection error correction, a significant savings. A histogram plot of the simulation ΔV obtained across all tested cases is shown in Figure 5 and individual maneuver statistics are complied in Table 5. The summation of all INC1 and INP1 segments is also shown

in Table 5; per the simulation constraints, the largest single maneuver segment that is implemented for the INC1 maneuver is 7 m/s and the largest single maneuver segment that is implemented for the INP1 maneuver is 10 m/s.

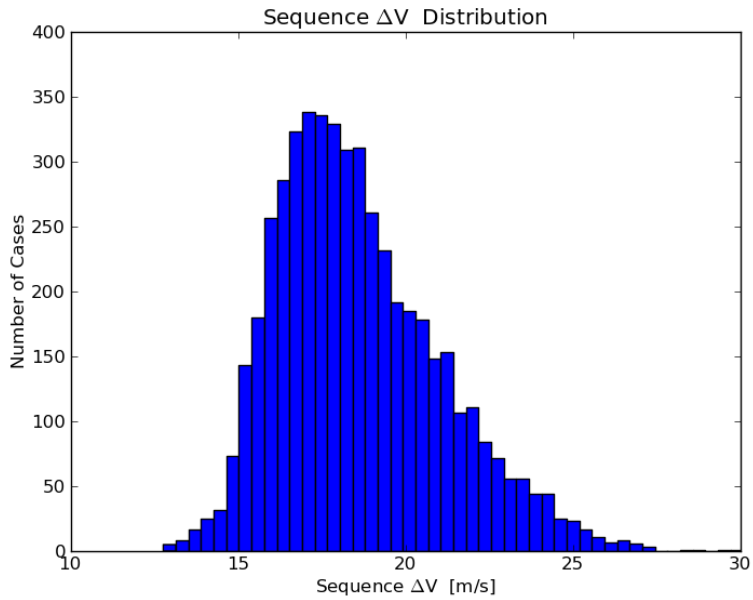

Figure 5: ΔV histogram for Total Simulation ΔV for Monte Carlo Analysis.

Table 5: Monte Carlo Simulation Results: ΔV and Maneuver Segment Count.

Maneuver	Mean	99%ile	Min/Max # Segments
CAL1	1.0 m/s	1.0 m/s	1
INC1 (total)	7.4 m/s	14.5 m/s	1 / 3
INP1 (total)	9.6 m/s	17.6 m/s	2 / 5
INC2	0.1 m/s	0.3 m/s	1
CAL2	0.2 m/s	0.2 m/s	1
INP2a	0.2 m/s	0.5 m/s	1
INP2b	0.1 m/s	0.4 m/s	1
Sequence	18.6 m/s	25.4 m/s	9 / 13

For the current mission parameters used, the Monte Carlo analysis also shows that Science Orbit acquisition can be accomplished per the fixed maneuver timeline (Figure 2) with no additional maneuvers needed (even beyond the 99%ile cases). Histogram plots of the distribution of the number of INC1 and INP1 maneuvers required for each simulation is shown in Figure 6. The inclination correction requires a maximum of 3 INC1 segments (INC1a,b,c), which can all be accomplished in a single day. The apses height and argument of periapsis corrections require a maximum of 5 INP1 segments (INP1a,b,c and INP1d,e); no additional in-plane segments are needed. Final orbit clean-up and fine-tuning is performed using the INC2 and INP2 maneuvers.

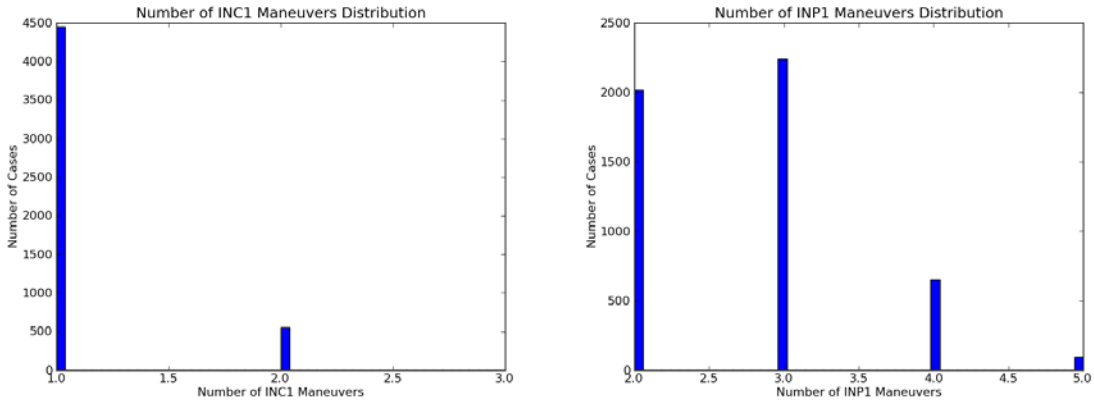

Figure 6: Histograms of Number of INC1 and INP1 Maneuvers Needed for Orbit Transfer.

5.3 Simulation Validation

Testing every sample case run through the analytical simulation would be extremely time consuming; instead, a nominal injection case and a select few 3σ injection cases are simulated via numerical integration and finite burns and are compared to the maneuvers computed by the analytical simulation. This analysis is used to validate the analytical simulation statistical ΔV99 results. Validation simulation have been performed for an earlier (October 23, 2014) launch date; a sample 3σ test case is shown in Table 6.

Table 6: Sample 3σ Injected Orbit and Science Orbit Target.

Parameter	Injected Value	Target Value
Semi-major Axis	7022.1184 km	7057.52089 km
Eccentricity	0.0009351	0.00119481
Inclination	98.026994 deg	98.12258 deg
Longitude of Node	301.9790 deg	301.97997 deg
Argument of Periapsis	176.4632 deg	89.26871 deg
Mean Anomaly	183.5263 deg	270.73792 deg
Earth Space True Equator Coordinate System, Mean Elements, Epoch = 23-OCT-2014 15:36:26.5099 ET		

Finite burns are used in the numerical simulation. The propulsion system characteristics used for modeling are: an effective thrust of 15.3 N at simulation start (via four 4.5 N thrusters, an Isp of 216.0 at simulation start, and a mass flow rate of 7.4 grams/second. The effective thrust and mass flow rate over the burn arc are assumed to be constant; a predicted blow-down characteristic curve (thrust and mass flow rate as a function of propellant consumed) is used for the design of subsequent maneuvers. The same mission requirements are used in the finite burn sequence as in the analytical simulation. The out-of-plane and in-plane maneuvers are limited to a maximum of 7 m/s and 10 m/s, respectively. The maneuver segments (for INC1 and INP1) are implemented continuously without re-design between segments, and the maneuver segments are implemented 2 orbits apart. Maneuvers are also implemented with 3σ execution error (per the Gates Model described in Table 4).

The maneuver results for the numerical simulation are shown in Table 7. The simulation ΔV computed via full numerical integration and finite burn simulation agrees fairly well when compared to the ΔV computed via the analytical simulation. Both solutions are feasible, but not necessarily optimal, solutions to the orbit transfer. The achieved orbit following the finite burn sequence is propagated for 90 days in order to verify that the Science orbit requirements have been achieved following completion of the Commissioning Phase maneuvers. The desired characteristics (frozen, sun-synchronous, repeating ground track orbit) were all observed.

Table 7: Numerical Simulation Finite Burns versus Analytical Simulation Impulsive Burns.

Maneuver	**ΔV (Finite Burns per Numerical Simulation)**	**ΔV (Impulsive Burns per Analytical Simulation)**
CAL1	1.0 m/s	1.0 m/s
INC1a,b	14.0 m/s	13.5 m/s
INP1a,b	12.2 m/s	11.8 m/s
INC2	-	0.4 m/s
CAL2	0.2 m/s	0.2 m/s
INP2a	0.075 m/s	1.3 m/s
Total:	27.275 m/s	28.0 m/s

The final finite burn performed (INP2a) is a magnitude of only 7.5 cm/sec, as the smallest burn the spacecraft can perform (per Mission Requirements) is 12.5 cm/sec; "pitch biasing" (as previously discussed) is implemented when performing this maneuver. INP2a is used to tune the orbit to the repeat track conditions of the science orbit, and can be considered the first maintenance maneuver of the science phase.

6.0 Conclusions

The Analytical Commissioning Phase Simulation has been developed to perform Monte Carlo analysis on the SMAP Commissioning Phase maneuvers. The algorithm is developed assuming impulsive maneuvers and utilizes analytical rate equations to propagate the spacecraft state between maneuver epochs. The simulation is flexible, adaptable, and can be run quickly to perform parametric results for varied mission parameters. The ΔV99 computed via Monte Carlo simulation is held as a line-item in the mission ΔV budget. This figure is held with high confidence and is less than the ΔV required to correct 3σ injection errors.

The ΔV99 computed is per the current set of mission parameters (including current maneuver timeline, launch vehicle injection dispersions, and maneuver execution error models). Changes to mission parameters will impact the statistical ΔV99 computed in future simulations. The SMAP Mission ΔV budget may be updated to better reflect the expected ΔV allocation needs for the Commissioning Phase maneuvers.

7.0 Acknowledgements

The work described in this paper was carried out by the Jet Propulsion Laboratory, California Institute of Technology, under contract with the National Aeronautics and Space Agency. Special thanks to George Carlisle of the Jet Propulsion Laboratory.

© 2012 California Institute of Technology. Government sponsorship acknowledged.

8.0 References

[1] National Research Council, *Earth Science and Applications from Space: National Imperatives for the Next Decade and Beyond*. National Academies Press, 2007.

[2] Entekhabi, D.; Njoku, E.G.; O'Neill, P.E.; Kellogg, K.H.; Crow, W.T.; Edelstein, W.N.; Entin, J.K.; Goodman, S.D.; Jackson, T.J.; Johnson, J.; Kimball, J.; Piepmeier, J.R.; Koster, R.D.; Martin, N.; McDonald, K.C.; Moghaddam, M.; Moran, S.; Reichle, R.; Shi, J.C.; Spencer, M.W.; Thurman, S.W.; Leung Tsang; Van Zyl, J.; "The Soil Moisture Active Passive (SMAP) Mission," *Proceedings of the IEEE* , vol.98, no.5, pp.704-716, May 2010

[3] Vallado, D.A., Fundamentals of Astrodynamics and Applications, 2nd Edition, Microcosm Press, El Segundo, CA, 2001.

[4] Bate, R.R., Mueller, D.D., White, J.E., Fundamentals of Astrodynamics, Dover Publications, Inc., New York, NY, 1971.

[5] Bhat, R.S., Shapiro, B.E., and Frauenholz, R.B., TOPEX/Poseidon Orbit Acquisition Maneuver Sequence, AAS/AIAA Astrodynamics Specialists Conference, Victoria, British Columbia, Canada, August 16-19, 1993.

[6] "NRLMSISE-00: A New Empirical Model of the Atmosphere", National Research Council, 2003.

[7] Marshall Space Flight Center's Solar Activity Site [http://sail.msfc.nasa.gov].