Final Progress Report
Mar's Science Laboratory: Qualification Model Dirty Testing (QMDT) Support
By: Makai A. Cartman, MIT
Mentor: Randall Foehner

Introduction

The Martian missions of Sprit, Opportunity, and many others have sparked high interest in Mars which has led to Curiosity to answer questions that we have sought after for years. Has life ever existed on Mars? Through the collection and analyzation of samples, it will help to answer questions about the possibilities of life that may have existed on Mars, and we will gain valuable data about the planet Mars.

Background

The Mars Science Laboratory (MSL) rover Curiosity landed on the surface of Mar's on August 5th, 2012. Onboard the rover is a Sample Acquisition – Sample Processing and Handling (SASPaH) Drill and a Collection and Handling for In situ Martian Rock Analysis (CHIMRA) system. Both of these components have been and continue to be tested in Mar's like conditions here on Earth, at JPL within the Qualification Model Dirty Testing vacuum chamber. QMDT is a test program setup to characterize and gain experience with MSL's SASPAH Drill and CHIMRA and also to troubleshoot/investigate issues that may arise during Mission operations in a Mars-like environment. The future success of the MSL mission is directly linked to QMDT's involvement which works to keep things running smoothly by testing different rock types and various collection methods before performing actual sorties on Mars so that we know how to proceed with as few complications as possible.

Makai Cartman

Intern Objectives

I was given, via this internship, an opportunity to support QMDT working as a test associate engineer. Interning at JPL has allowed me to gain experience in my field of study by:

- Supporting a mission operation to ensure a collection of sample on Mars.
- Working with QMDT to make sure everything runs smoothly when MSL starts drilling and analyzing samples.
- Creating test fixtures that make it easier for test operations.
- Preparing rock materials that will be similar to those found on Mars.

Approach (Task Assignments)

During my ten week internship, I was assigned two tasks:

Task #1: Cast several Mars like rock samples into concrete to create an overall larger rock sample. This has to be done in order for the rock test sample size to be equivalent to those on Mars.

Task #2: Add a scale into QMDT to measure the mass of sample being delivered to CheMin, a Chemistry and Mineralogy powder X-ray Diffraction instrument. This was required because the old testing apparatus collected sample but did not weigh it. With the addition of a scale, engineers will know exactly how much sample is being tested.

Task #1-Sample Preparation, Rock Cutting

My job was to design a better casting mold. Originally, the engineers were using cardboard boxes lined with aluminum foil as a mold; however, they found that this did not work well as it was not sturdy enough (See figure 1). That said, they requested me to find an alternative solution. I was able to come up with a different casting mold using steel tote boxes (See figure 2). These boxes were sturdier and produced a more homogenous sample that did not fall apart. In addition to casting, I also cut rocks to size using a wet saw (See figure 3).

Figure 1

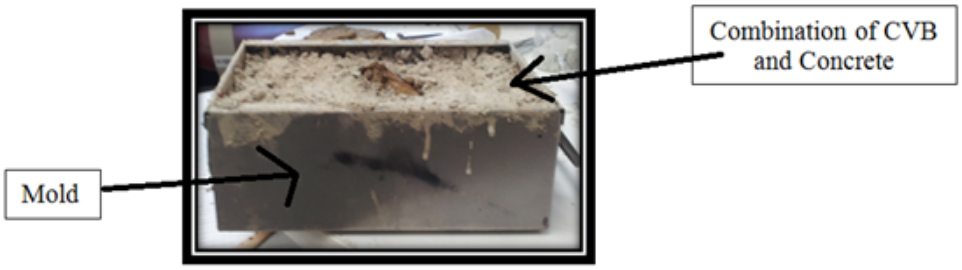

Figure 2

Figure 3

Task #2- Test Fixture Design and Build

My job was to add a scale to QMDT. Performing this task allowed me to gain experience in the Division 35 engineering, design, and build process including but not

limited to: creating drawings in SolidWorks, using the JPL PDMS drawing management system, and working with JPL's fabrication services. I also became familiar with JPL's procurement process as I had to order Commercially Available Off-The Shelf (COTS) hardware including but not limited to vacuum components, stand fixture's structural components, cables, and a heat exchanger.

My requirements for the scale were:

- Performance within temperatures of -100C and 100C.
- Must fit directly underneath the CheMin funnel.

I designed a test apparatus (See figure 4) in SolidWorks that used aluminum t-slotted framing to encase the scale. I finished the scale fixture design and started the fabrication process, but then I had to put everything on hold. This was because the test engineers decided to change the requirements. The requirement change was that the scale could not just sit beneath the CheMin funnel, but must be integrated into the same support apparatus that holds CheMin. This decision was made because previously CheMin was being mounted to the side of the vacuum chamber wall and when tests were conducted that did not involve CheMin, it was a hassle to disassemble and reassemble it in the chamber. The new fixture was therefore designed to easily be

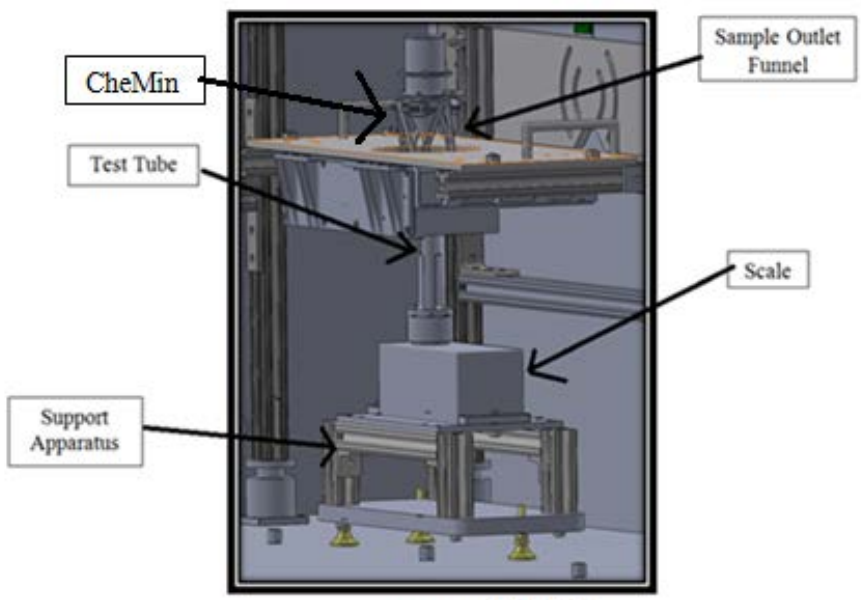

Figure 4 (1st Design)

removed and installed in the chamber. This design would also allow for more accurate sample capture from the funnel to the test tube. This was a problem with the last apparatus due to a misalignment between the funnel and test tube.

I generated a new design using SolidWorks that incorporated the new requirements (See figure 5). I again used the aluminum t-slotted framing for most of the structure, but this time I added slots and sliding bolts allowing the scale to be positioned in any orientation thus ensuring alignment.

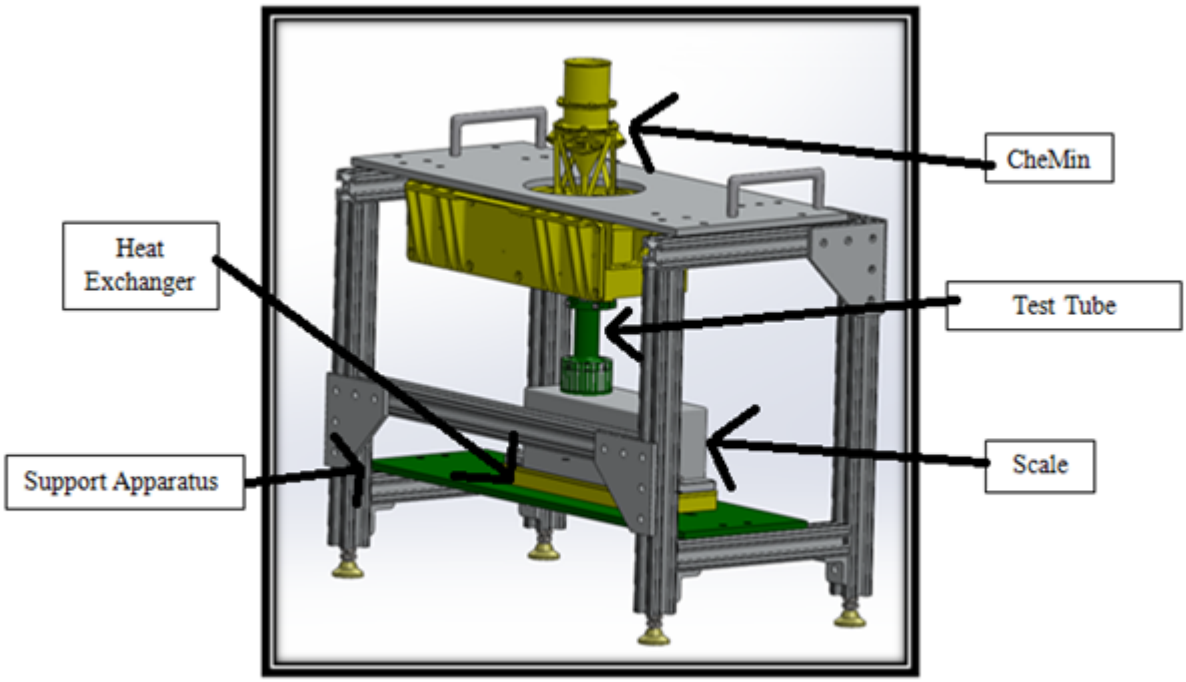

Figure 5 (2nd Design)

Results

New rocks that I created from both casting and cutting were successfully tested in QMDT. The mass scale fixture was built and integrated with CheMin but has not been used in testing as of yet. I anticipate it will be used around the time I return to school (~ August 27th).

Conclusion

Through the preparation of rocks and development of testing apparatus for QMDT, I learned the following:

1) The importance of designing good tooling and test support equipment helps save time and money.

2) By keeping designs simpler, they are not only easier to build but also easier to use by test operators.

The work that I completed this summer will continue to be utilized in QMDT's testing which as mentioned before supports Curiosity's in situ exploration on Mars.

Acknowledgments

- Randall Foehner, Group Supervisor

  Robotic Manipulators and Deployable Booms Group, 355B
- Lori R. Shiraishi, Group Supervisor

  Planetary Sample Acquisition & Handling Group, 355A
- Engineers in sections 355A and 355B
- Jet Propulsion Laboratory Summer Internship Program(JPLSIP)

Note: This research was carried out at the Jet Propulsion Laboratory, California Institute of Technology, and was sponsored by (name student program) and the National Aeronautics and Space Administration.