The Geostationary Fourier Transform Spectrometer

Richard Key*[a], Stanley Sander[a], Annmarie Eldering[a], Jean-Francois Blavier[a],
Dmitriy Bekker[a], Ken Manatt[a], David Rider[a], Yen-Hung Wu[a]
[a] Jet Propulsion Laboratory, California Institute of Technology,
4800 Oak Grove Drive, Pasadena, CA 91109

ABSTRACT

The Geostationary Fourier Transform Spectrometer (GeoFTS) is an imaging spectrometer designed for a geostationary orbit (GEO) earth science mission to measure key atmospheric trace gases and process tracers related to climate change and human activity. GEO allows GeoFTS to continuously stare at a region of the earth for frequent sampling to capture the variability of biogenic fluxes and anthropogenic emissions from city to continental spatial scales and temporal scales from diurnal, synoptic, seasonal to interannual. The measurement strategy provides a process based understanding of the carbon cycle from contiguous maps of carbon dioxide (CO_2), methane (CH_4), carbon monoxide (CO), and chlorophyll fluorescence (CF) collected many times per day at high spatial resolution (~2.7km×2.7km at nadir). The CO_2/CH_4/CO/CF measurement suite in the near infrared spectral region provides the information needed to disentangle natural and anthropogenic contributions to atmospheric carbon concentrations and to minimize uncertainties in the flow of carbon between the atmosphere and surface. The half meter cube size GeoFTS instrument is based on a Michelson interferometer design that uses all high TRL components in a modular configuration to reduce complexity and cost. It is self-contained and as independent of the spacecraft as possible with simple spacecraft interfaces, making it ideal to be a "hosted" payload on a commercial communications satellite mission. The hosted payload approach for measuring the major carbon-containing gases in the atmosphere from the geostationary vantage point will affordably advance the scientific understating of carbon cycle processes and climate change.

Keywords: Fourier Transform Spectrometer, atmospheric trace gases, diurnal land-atmosphere carbon exchange, geostationary orbit, hosted payload

1. INTRODUCTION

The Geostationary Fourier Transform Spectrometer (GeoFTS) is an imaging spectrometer for an earth science mission to measure key atmospheric trace gases and process tracers related to climate change and human activity. It is designed for operation in geostationary orbit (GEO) which enables frequent measurements daily to capture the spatial and temporal variations of atmospheric composition related to carbon cycle processes. GeoFTS takes simultaneous, high spatial resolution measurements of carbon dioxide (CO_2), methane (CH_4), carbon monoxide (CO), and chlorophyll fluorescence (CF) in the near infrared spectral region as indicated in Figure 1.

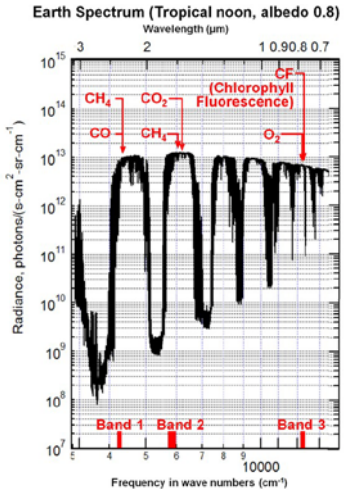

Figure 1. GeoFTS measures the atmospheric absorption of CO_2, CH_4, CO, and CF in three spectral bands.

* Richard.Key@jpl.nasa.gov; phone 818-354-3060

The CO_2/CH_4/CO/CF measurement suite provides the information needed to disentangle natural and anthropogenic contributions to atmospheric carbon concentrations and to minimize key uncertainties in the flow of carbon between the atmosphere and surface since they place constraints on both biogenic uptake and release as well as on combustion emissions. Significant progress has been made in developing global and regional carbon budgets over the last decade, but many fundamental science questions remain. Future levels of atmospheric CO_2 are expected to increase due to human activities[1] and CO_2 is the heartbeat metric for Earth's climate. Direct observations of atmospheric CO_2 is a NASA priority[2] and a national need as described in the 2011 U.S. Carbon Cycle Science Plan[3]. These reports emphasize that a better scientific understanding of the Earth's carbon cycle is both an urgent societal need as well as a challenging scientific problem. An achievable goal for the next decade is to obtain a process-based understanding of observed carbon cycle variability that is accurate and extensible from city to regional and continental scales, and improves future projections of the carbon cycle and climate. Measurements from ground based networks, airborne platforms, and low earth orbit (LEO) satellites currently provide important information about the carbon cycle, but their data sets do not provide the high resolution spatial and temporal information needed to understand the fine details of carbon cycle processes over large geographic regions. Simultaneous, high resolution measurements of CO_2, CH_4, CO, and CF in the near infrared spectral region multiple times per day from GEO can provide high resolution data at very fine time scales (minutes to hours to days) and small spatial scales (few km) over continental size regions. The GEO vantage point enables high measurement density (spatial and temporal) mapping of carbon cycle processes over a third of earth's populated regions, e.g. the Americas, Europe / Africa, Asia / Australia. The largest 25 urban areas (megacities) account for 75% of the global total fossil fuel CO_2 emissions[4]. Rapid growth exceeding 10% per year is expected in developing regions in the coming decade which will result in big changes in the global patterns of fossil fuel combustion, both for primary power generation and for transportation services. The ability to continuously stare from GEO at any region in the field of regard enables mapping capability with cloud avoidance observing scenarios which is key for determining spatial gradients, and flexibility to trade observational coverage vs. sampling frequency to capture critical events/processes. The GeoFTS mission objective is to obtain a process-based understanding of observed carbon cycle processes, which are observable everywhere around the globe. Therefore, the GeoFTS mission is not constrained to any specific longitude. An orbit longitude near -95° would be ideal for observations of the Americas. A longitude near 20° would be ideal for observations of the European and African continents while a longitude near 120° would be ideal for observations of the Asian and Australian continents. These three viewing region options are illustrated in Figure 2.

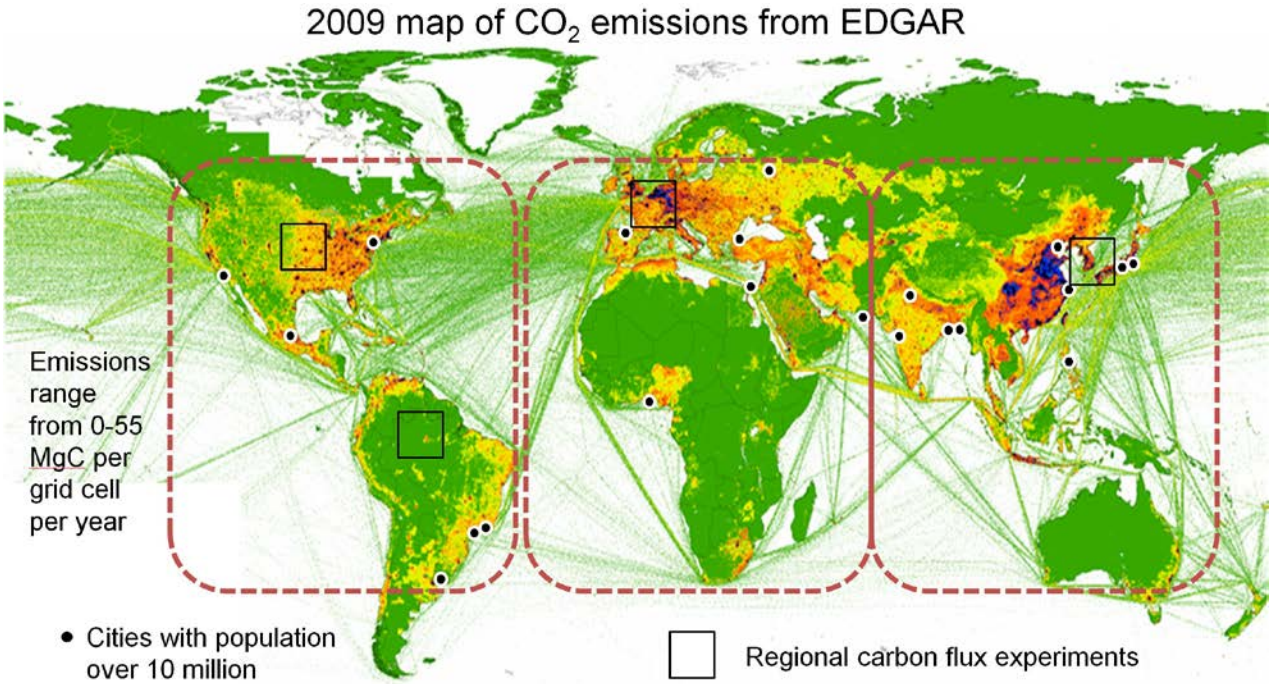

Figure 2. The GEO vantage point enables continuous direct observations of carbon cycle processes over a third of the globe. The graphic shows GeoFTS viewing region options overlain on a map of annual carbon emissions from the Emissions Database for Global Atmospheric Research (EDGAR). Urban areas with population over 10M people, and regional carbon flux project are located in each of the potential GeoFTS observation regions.

Almost any orbit longitude would provide access to observe spatial and temporal variations in CO_2, CH_4, CO, and CF over megacities, diurnal uptake and release of greenhouse gases in cropland regions, the dynamic response of vegetation to varying illumination and stress conditions, and atmospheric transport and mixing processes. Measurements many times per day with a < 4 km ground sampling distance on continental scales will provide never before seen details of anthropogenic emissions and deliver a new level of insights about carbon cycle variability.

2. INSTRUMENT ARCHITECTURE

The GeoFTS instrument is based on a Michelson interferometer design with a number of advanced features incorporated. Fourier Transform Spectrometers (FTS), as a class of instruments, have a proven record for providing Earth observations that address a broad range of science objectives. FTS designs have successfully flown on a number of space missions including the Atmospheric Trace Molecule Spectroscopy (ATMOS) experiment[5], the Tropospheric Emission Spectrometer (TES)[6], the Cross-Track Infrared Sounder (CrIS)[7], and the Greenhouse Gases Observing Satellite (GOSAT)[8]. A FTS-based instrument offers many important advantages compared to alternative instruments architectures such as Fabry-Perot, gas correlation, or grating spectrometers.

- An FTS has a much wider spectral range, independent of the detector array size. This wide bandwidth enables simultaneous measurement of several gas species.
- The 2D FOV maps directly to the observed scene, so there is no need for a "push-broom" type of scanning.
- The spectral resolution is primarily set by the optical path difference of the interferometer not the critical slit alignment requirements of a grating instrument.
- The GeoFTS interferometer modulates light at frequencies ranging from 475 to 1560 Hz, which are above the 1/f scintillation of the Earth, so that source of noise is rejected.
- The way in which a FTS interferometer modulates each source wavelength results in negligible stray light. In a FTS there is no direct equivalent of the stray light contamination found in grating spectrometers.
- An FTS is intrinsically less sensitive to the polarization of the incident radiance than a grating spectrometer.
- The spectral frequency scale of an FTS is linear, set by a stable reference diode laser eliminating wavelength drift from small temperature changes suffered by grating instruments.

The GeoFTS instrument has all of these advantages plus some advanced features. Two of the most important ones are high throughput two dimensional imaging focal plane arrays and the high precision optical path difference mechanism, which are both described later in this paper. The GeoFTS instrument functional block diagram in Figure 3 shows the essential elements of the process and components that convert incoming light into a digital signal out.

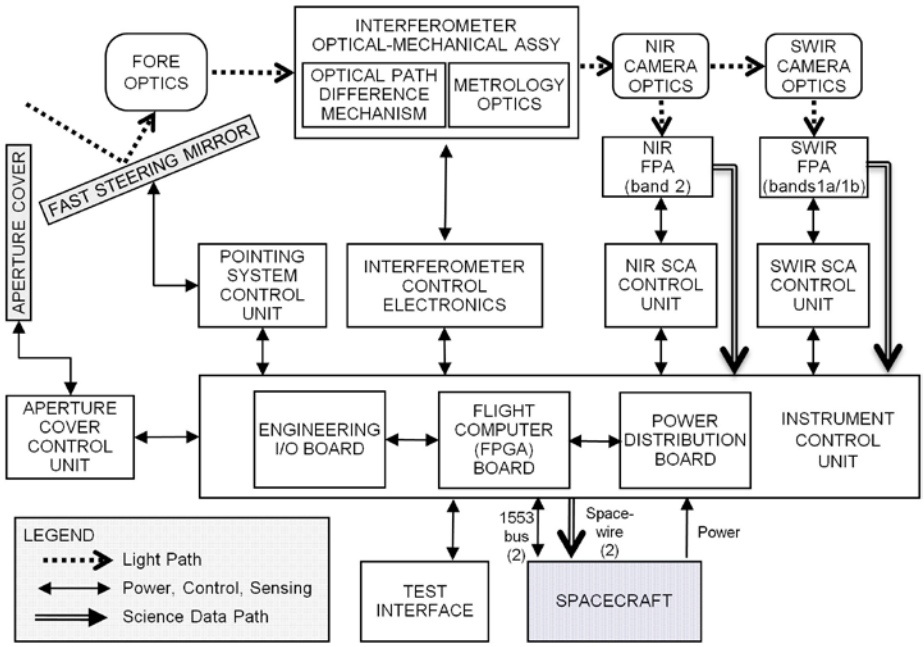

Figure 3. GeoFTS instrument block diagram

Light enters the GeoFTS instrument through an aperture which has a cover that protects the optics and thermal radiators when the instrument is not making observations. The instrument aperture cover is a simple turntable structure with three positions: (1) cover the aperture to provide contamination/solar protection while shielding the nadir radiators, (2) open to allow science observations and dark sky calibration, and (3) expose a diffuser plate through an attenuator for solar calibration. A Fast Steering Mirror (FSM) points and stabilizes the instrument line of sight for science observations and calibration. The FSM directs light from the entrance aperture to the fore optics which passes light through a field stop, compresses the optical beam size and sends a collimated beam into the heart of the FTS, the interferometer Optical Mechanical Assembly (OMA), where interferograms are generated. The spectral resolution of the interferometer is controlled by the optical path difference mechanism (OPDM). The optical path difference which is directly proportional to the mechanical path difference is recorded by a laser metrology system. The interferometrically-modulated scenes are imaged by two sets of camera optics onto individual focal plane array (FPA) modules which contain a detector that measures the intensity of the incident radiation and generates a digital signal proportional to the intensity. The digital signal from each detector is sent to an FPGA based instrument control unit which captures digitized raw interferograms from the FPAs along with the laser metrology system output, and combines the data from all of the channels and applies a lossless compression method to reduce the data volume and packetizes the data for transmission to the host spacecraft via a redundant high speed interface for downlink to the ground.

2.1 Design Approach and Robustness

The instrument is designed around two critical components: a high perfromance interferometer OMA, and focal plane arrays tailored for operation in an imaging FTS. The design shown in Figure 4. is mature and needs no new technologies or elements that represent an untested advance in the state of the art.

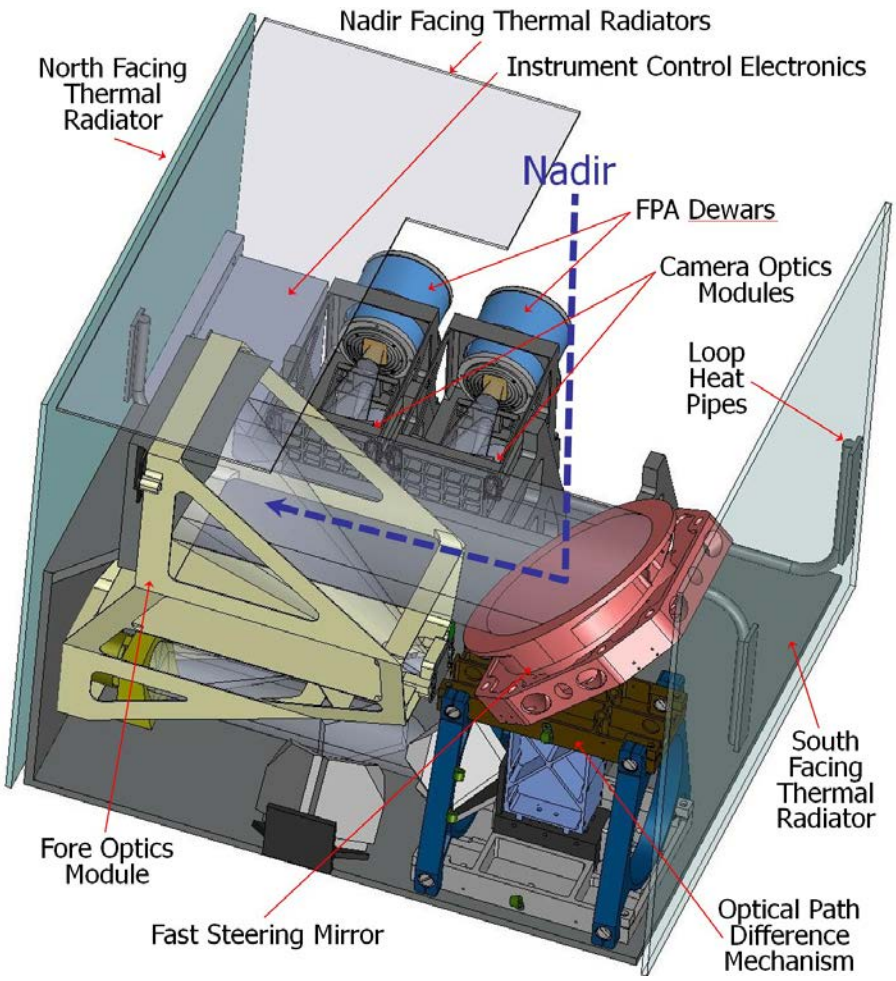

Figure 4. The GeoFTS instrument uses TRL 6 components for low-risk, high-reliability operation.

Design choices for the instrument electronics, mechanisms, and optics assure years of reliable operation in GEO with no degradation in measurement capabilities. Instrument operation is a simple, mode-based sequence that is repeated daily from the same orbital vantage point. Effects of radiation, both Total Ionizing Dose (TID) and Single Event Effects (SEE) are mitigated by use of radiation-tolerant components, thick shielding, and active design features such as watchdog timers and reset functions that clear Single Event Latchup conditions. The instrument has three, high-reliability moving parts. The aperture cover uses the same actuator as the Orbiting Carbon Observatory 2 (OCO-2) which has a launch lock. The FSM and OPDM do not require launch locks, but provisions exist to add them if necessary. Both the FSM and OPDM are friction-free flexure based designs which do not require lubricants and have no life limiting wear-out risks. All three mechanisms have high heritage and robust (>10X) lifetime margins on the number of actuations.

3. INSTRUMENT SYSTEMS

The instrument consists of several systems including the pointing system, fore optics module, the interferometer optical mechanical assembly, camera optics modules, focal plane assembly modules, digital signal-chain electronics, thermal control system and mechanical structure. The ~ 80 kg, half meter cube size configuration of the GeoFTS instrument uses high TRL components and designs. The following sections describe the instrument systems and modules.

3.1 Imaging System Design

As an imaging spectrometer, the GeoFTS instrument acquires a spectrally-resolved image of its instantaneous field-of-view (IFoV) scene by holding the line-of-sight fixed on the scene for the period of time needed to record interferograms of the scene. A square pixel array maps the scene with spatial sampling defined by the optical system design and observing geometry. At the sub-satellite point the optical design has a 0.28×0.28 degree (~173×173 km^2) IFoV which is imaged onto 64×64 pixels of a FPA to provide a 2.7×2.7 km^2 pixel footprint size at nadir. An interferogram is recorded in every pixel while the scene is observed which is nominally 19 seconds, but observation time can be adjusted to achieve higher SNR.

3.2 Pointing System Design

From GEO the angular extent of Earth is about ±8.6º from nadir. The GeoFTS instrument has its own line-of-sight pointing system that uses a two degree-of-freedom pointing mirror to steer the instrument line-of-sight to any location over the full earth disk in any sequence/pattern desired providing total flexibility in the choice of observing patterns. A simple pattern like the one depicted in Figure 5 could map the continental U.S. in approximately 2 hours.

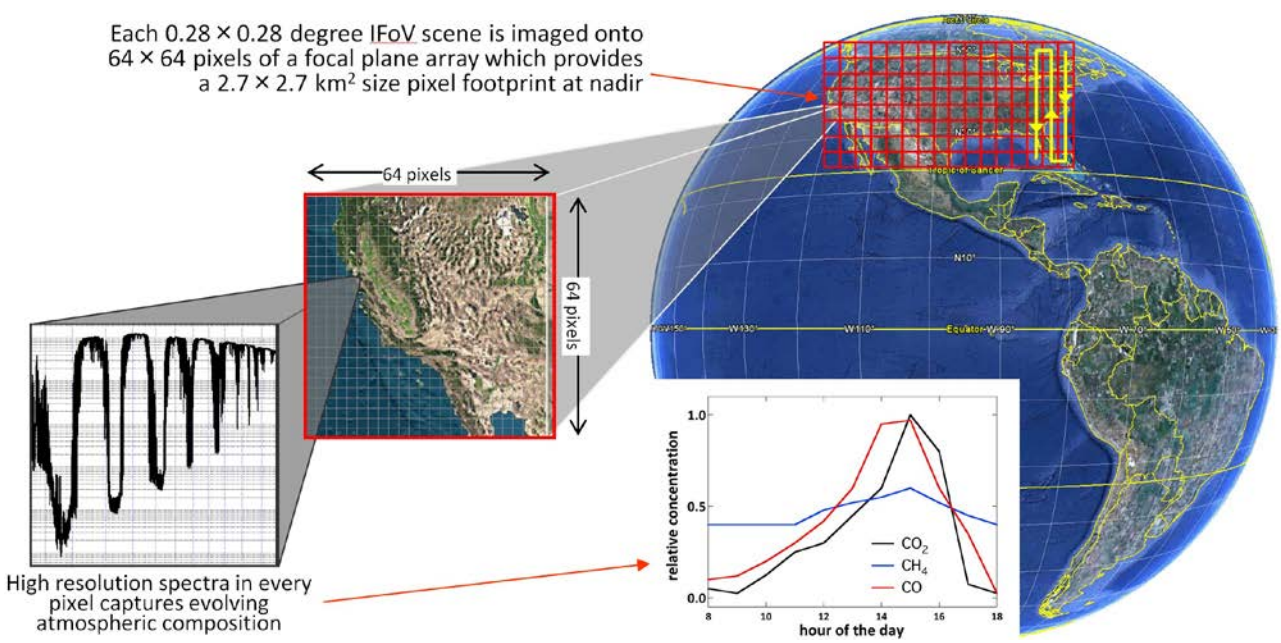

Figure 5. GeoFTS observing capability is totally flexible; observations can be made over the full earth disk in any sequence or pattern.

This continental U.S. observation campaign would consist of ~360 scenes observed one at a time in a boustrophedonic ("as the ox plows") sequence as indicated in Figure 5. Each scene is observed for 19 seconds which results in coverage of the entire continental U.S. in about 2 hours. The GeoFTS pointing pattern can be any sequence of observations, not necessarily in a grid or adjacent scenes so that observations of special events happening in North and South America at the same time can be observed.

To avoid placing demands on spacecraft attitude control, the instrument uses an FSM to point and stabilize the line of sight. To implement the ground-sampling pattern, the FSM steps the line of sight with a required accuracy of 4 pixels (60 arcsec) 3σ/axis to each target point, settles for 1 second then provides real-time stabilization to within 0.2 pixels (3 arcsec) 3σ/axis over each 19 second integration interval before moving on to the next step. A 20% scene overlap in the direction of motion (12 pixels or 180 arcsec) eliminates ground coverage gaps due to pointing control errors (including image rotation) and enables scene to scene correlation for geolocation reconstruction in image post-processing.

The pointing system hardware made by Left Hand Design Corporation (LHDC) consists of a friction-free flexure-mounted voice-coil-actuated FSM and its associated servo-control electronics. The inherent simplicity and robustness of the flexure mounting system and voice-coil actuation provides high performance for both fast-steering pointing jitter compensation and large angular pointing precision. The FSM shown in Figure 6 is a slightly smaller version FSM delivered to JPL for lifetime and space environment testing several years ago.

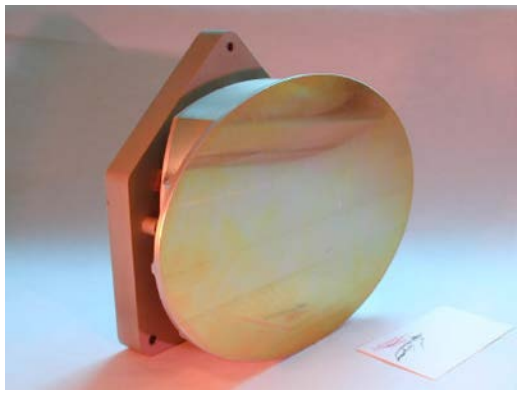

Figure 6. The LHDC FO150-mm aperture FSM after 220 million full-travel cycles life test with no degradation.

Lifetime testing was halted after the FO150 FSM completed over 220 million full travel cycles with no degradation in performance. Several other LHDC FSMs have since been tested to one billion full-travel cycles. LHDC FSMs and their associated electronics have been qualified for other programs and have flown in space on AFRL's XSS-11 Rendezvous and Proximity Operations satellite and its two classified sister missions.

3.3 Optics System Design

The GeoFTS instrument has four optics modules: the fore optics, the interferometer optics, and NIR and SWIR camera optics as illustrated in Figure 7.

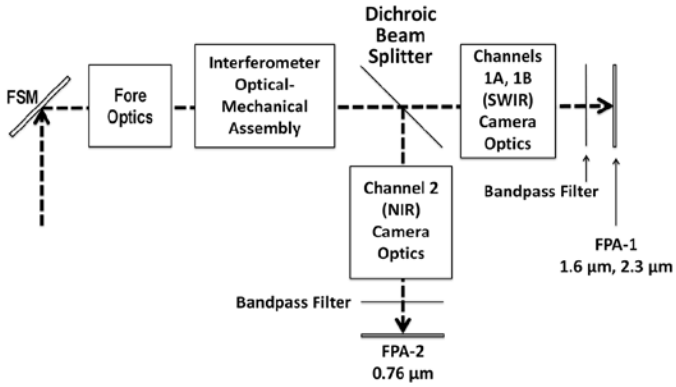

Figure 7. The GeoFTS Instrument optical block diagram

Light from the FSM goes to the fore optics which compresses the optical beam and sends a collimated beam into the interferometer where interferograms are generated. The interferometrically-modulated scenes exiting the interferometer go to a dichroic beam-splitter which transmits SWIR light into the SWIR camera optics and reflects the remaining light to the NIR camera optics. The NIR and SWIR camera optics modules are mechanically and optically identical. A bandpass filter in front of the NIR FPA limits light detection in NIR Band 2 spectral range. Channels 1A and 1B are captured on a single FPA using a two bandpass Rugate filter. This filter transmits light in the two GeoFTS SWIR bands while suppressing out-of-band radiance and minimizing photon noise (mainly in Band 1A). This two bandpass filter is tailored to have spectral properties that meet GeoFTS specific requirements. Rugate filters[9] are interference filters that have a deep, narrow rejection band while also providing high, flat transmission for the rest of the spectrum. They can be designed and manufactured with a specific bandwidth, depth of reflection notch, effective refractive index as well as elimination of unwanted sidebands or harmonics. Rugate filters feature superior performance over standard filters due to the novel manufacturing process that yields a continuously varying index of refraction throughout the oxide film layers. Because of this process, Rugate filters feature low ripple and no harmonic reflections compared to standard notch filters, which are made with discrete layers of materials with different indices of refraction. Rugate filters also exhibit a high degree of environmental durability and extremely low wavelength shift over a wide range of temperatures. The overall optical design is carefully optimized to minimize polarization sensitivity. Details of each GeoFTS instrument optics module are summarized next.

3.4 Fore Optics Module

The fore optics module is a conventional afocal three-mirror-anastigmat (TMA) design. It has a 250mm entrance pupil, 0.55° x 0.55° field of view, and 3.7x compression ratio. An off-axis configuration is desirable to avoid the ~25% area obscuration of an on-axis configuration. The TMA provides both an internal field stop and an internal aperture stop for stray light rejection. The optics has a real exit pupil, and the exit pupil is imaged at a specific location to minimize the critical optics in the interferometer module. The nominal design is diffraction limited at 0.7um wavelength. The light path traveled through the fore optics module is highlighted in Figure 8.

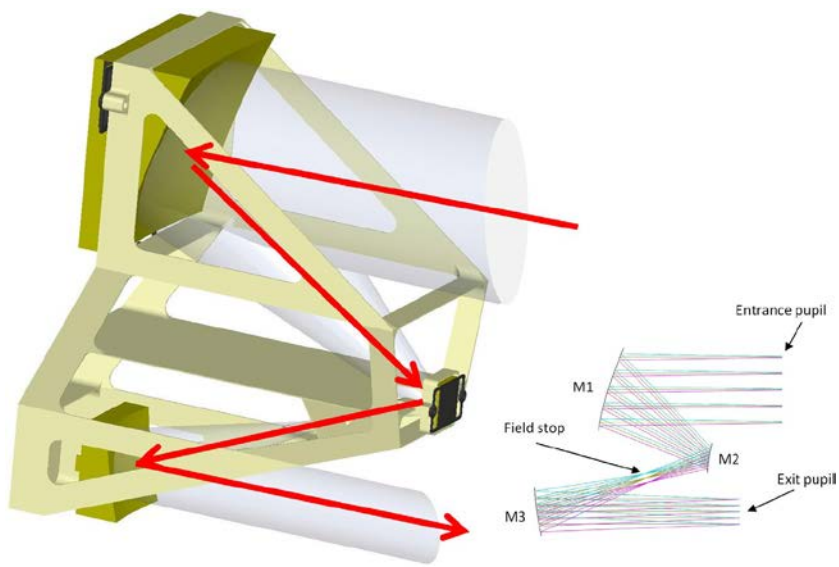

Figure 8. The GeoFTS all aluminum fore optics module is a conventional afocal three-mirror-anastigmatic system.

Readily available diamond turned aluminum mirrors meet GeoFTS wavelength range requirements. The fore-optics module elements (optics, mounts, and metering structure) are all made of aluminum with the same coefficient of thermal expansion to minimize optical performance degradation due to thermally induced mechanical misalignments. Aluminum has excellent thermal conductivity, thermal distortion indices and thermal diffusivity, which provides valuable benefits for optical systems. For example, under thermal soak a reflective optical system using the same type of material for the mirrors and structures does not experience a focus shift, i.e. stability of focus is independent of the thermal coefficient of expansion for "same material" athermalized systems. Similar all aluminum optical systems have been used successfully on OCO, OCO-2, WISE, and most recently ARTEMIS[10].

3.5 Interferometer Optical-Mechanical Assembly

The GeoFTS interferometer was developed and demonstrated by the Panchromatic Fourier Transform Spectrometer (PanFTS) task which was funded by the NASA Earth Science Technology Instrument Incubator Program in 2008-11 [11]. The interferometer and its optical path difference mechanism (OPDM) shown in Figure 9 generate high resolution interferograms.

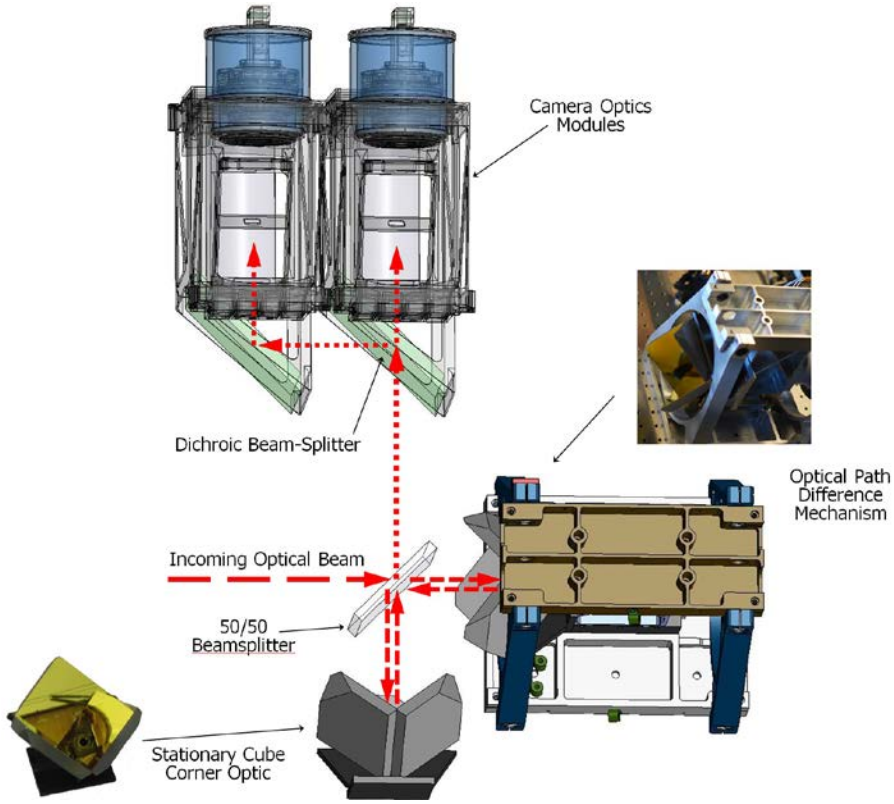

Figure 9. The interferometer uses cube corner optics to minimize sensitivity to tip/tilt errors inside the interferometer

The interferometer has a fixed optical length arm and a variable optical length arm. Light enters the interferometer and strikes a 50/50 beamsplitter that reflects half of the light and transmits the other half, splitting the light into a transmitted beam and a reflected beam. Each of these beams continues along its path until it hits a cube corner retroreflector. The beams retrace their paths to the beamsplitter where they are re-combined to create a modulated output beam that is sent to the camera optics modules which have dichroics that split the light into the NIR and SWIR spectral bands.

The interferometer uses commercially available cube corner optics like those which have reliably flown on GOSAT, TES, and CrIS and successfully survived launch vibrations. Cube corners minimize the sensitivity to tip/tilt errors in the interferometer and also reduce sensitivity to misalignment of the incoming optical beam. Highly precise alignment of the interferometer optical-mechanical assembly does not need to be maintained to a tight tolerance as would be the case for a typical optical instrument.

The spectral resolution of the interferometer is controlled by the OPDM which is capable of ±5 cm of travel (2.5X more than needed for GeoFTS). While a scene is being observed the OPDM translates its cube corner ±2 cm relative to the neutral position which provides the 0.25 cm^{-1} spectral resolution required for GeoFTS measurements. The OPDM is a friction-free flexure based design which does not require lubricants and has no life limiting wear-out risks. The four-bar-linkage parallelogram design uses eight rotational flex pivots to connect the linkages together. The stage is driven by a non-contacting linear voice coil actuator with a magnet fixed to the base and an electrically actuated coil that drives the upper part of the mechanism. The flex pivots are rated for infinite life because the flexing angles are so small even at full stoke translation. The optical path difference which is directly proportional to the mechanical path difference is recorded by a laser metrology system which measures the true optical path difference to a fraction of the shortest science wavelength to minimize interferogram interpolation errors when the interferogram is processed into spectra.

3.6 Camera Optics Module

The GeoFTS instrument has two identical camera optics modules like the one shown in Figure 10.

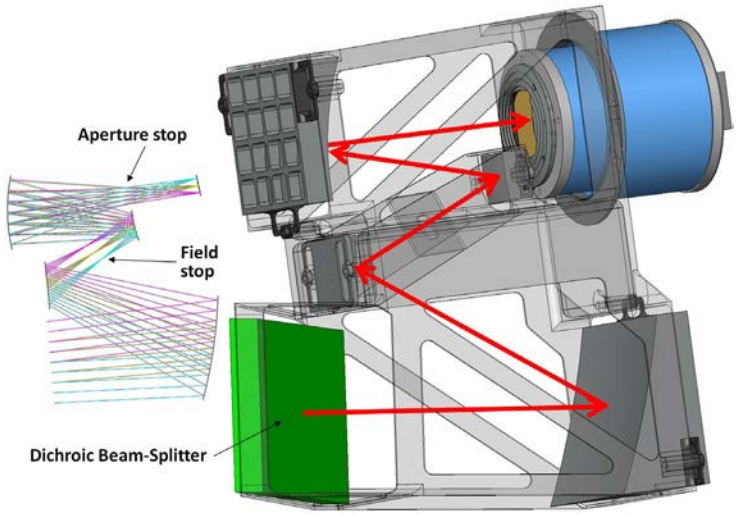

Figure 10. The GeoFTS all aluminum camera optics module is a compact four-mirror system

The camera optics module's function is to focus their respective incoming beam onto a focal plane assembly. Modulated light from the interferometer is directed into each camera optics module by a dichroic optic that directs a specific spectral band into the module for its spectral region of interest. The camera optics module is a compact four mirror design which has both a field stop and an aperture stop to prevent the FPA from seeing off axis radiation. The camera optics is a modular design for ease of assembly, testing, and alignment prior to integration with the instrument. It has a 68 mm diameter entrance pupil at zero path difference of interferometer; a 166 mm focal length camera, with a 2.6 degrees field-of-view. Like the fore optics module, all aluminum optical systems such as the GeoFTS camera optics module are manufactured easily and rapidly using proven methods and processes like those used by previous missions.

3.7 Focal Plane Assembly Dewar

The GeoFTS has two identical focal plane assembly dewars like the one shown in Figure 11 which serves two functions; mechanically maintain the optical alignment of the FPA to the incoming optical beam, and maintain the thermal environment needed for the FPA.

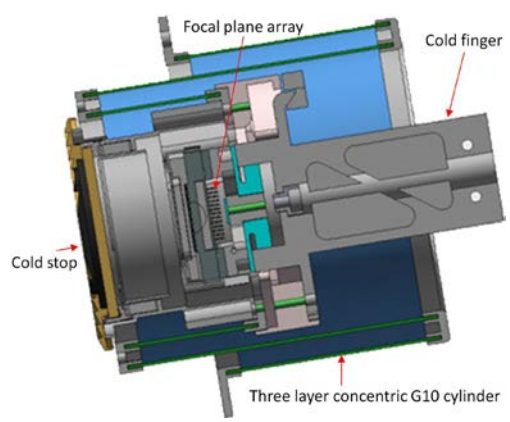

Figure 11. The focal plane assembly dewars minimize the thermal background illumination and thermal load on the FPAs

The entrance of the focal plane assembly module is aligned with the exit pupil which is also the cold aperture stop. Both the cold field stop and the cold aperture stop are essential for minimizing the thermal background illumination and thermal load on the FPA. The FPA is hard mounted to the cold finger of the focal plane assembly, and cooled via a high conductance thermal strap connected to a thermal radiator described in Section 3.12.

3.8 GeoFTS Digital Focal Plane Arrays (FPAs)

The GeoFTS focal plane arrays are based on three proven technologies:

(1) in-pixel analog-to-digital converter (ADC) read out integrated circuits (ROICs) developed by JPL,
(2) readily available photodiode detector arrays made by Raytheon Vision Systems (RVS), and
(3) RVS bump-bond hybridization processes.

The ROIC developed by JPL is the heart of the GeoFTS digital FPA. Each pixel in the 128×128 array has its own built in 14-bit ADC. Readout rates up to 16 kHz are possible but only 3.9 kHz is required for GeoFTS science. Analog-to-digital conversion and readout are done in all pixels simultaneously, enabling snapshot operation, which mitigates problems (e.g., crosstalk between pixels being read at different times) with conventional rolling shutter readouts. Figure 12 shows the 60 µm unit cell in-pixel ADC layout. This ADC circuitry is in each of the ROIC's 16,384 pixels. The design provides a digital output for each pixel which eliminates the off-chip ADC electronics needed by conventional FPAs. In-pixel digitization substantially reduces signal chain complexity, volume, mass, power, and implementation risk and cost.

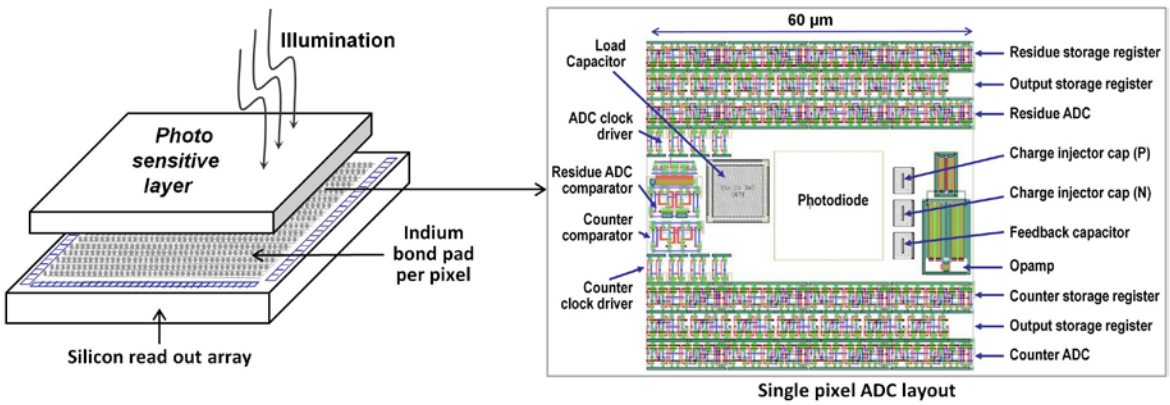

Figure 12. The GeoFTS advanced hybrid FPA design has a 14 bit ADC in each pixel.

The JPL ROIC development[12] was sponsored in 2008-11 by the NASA Earth Science Technology Advanced Component Technology (ACT-08) program. In 2010, a small number of ROIC chips were manufactured by a commercial foundry. The die layout included a variety of ancillary test circuits that were used to measure the "as-manufactured" performance of each circuit element design (opamps, charge injectors, comparators, etc.). Each pixel has a built-in silicon photodiode in the center which permits the ROIC to be tested without a full pixel detector. This photodiode is not sensitive enough to make GeoFTS science measurements, but is adequate to demonstrate the capabilities of the ROIC. The circuit is designed to accommodate both diode polarities which allows it to be fully tested using its built-in photodiode before being hybridized, and also operate normally after it has been hybridized with a detector layer. End-to-end functionality of the design was verified in the lab using the test set up shown in Figure 13.

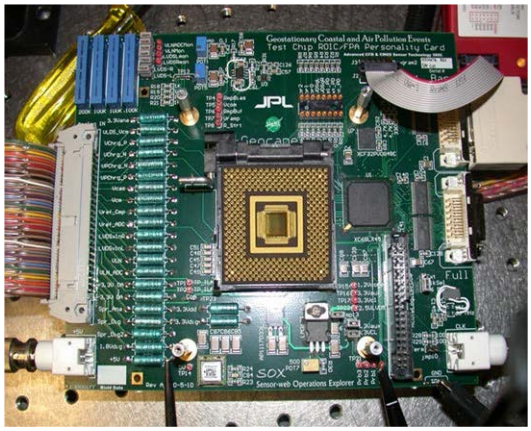

Figure 13. The test set up used to verify that the JPL developed ROIC achieved its design performance.

The capability of the ROIC for making atmospheric science measurements was demonstrated in an operational FTS. The built-in silicon photodiode in the center of each pixel is not sensitive enough to make GeoFTS science measurements, but is adequate to demonstrate the capabilities of the ROIC. To demonstrate the performance potential of the ROIC, one was incorporated in the Fourier Transform Ultraviolet Spectrometer (FTUVS) shown in Figure 14. FTUVS is a sun viewing Michelson interferometer that routinely acquires high-resolution solar spectra to measure total column abundances of OH, NO_3, CO_2, BrO, and other species[13] at JPL's Table Mountain Facility[14]. Over a period of several days the ROIC acquired a series of spectra covering a wide range of atmospheric and measurement conditions such as cloudiness, temperature, and readout frame rate. Figure 15 shows the measurement from a single pixel which is representative of the results for the entire array. The ROIC was clearly able to detect the oxygen absorption band. Successful ROIC operation in the FTUVS demonstrated the capability to make scientific measurements of atmospheric composition like those needed for GeoFTS. Operation in a relevant environment (an operational imaging FTS measuring atmospheric composition) advanced the ROIC technology maturity to TRL 6.

JPL, in partnership with NASA ESTO and the University of Michigan Exploration Laboratory, is developing GRIFEX, the "GEO-CAPE Read Out Integrated Circuit (ROIC) In-Flight Performance Experiment. GRIFEX will provide on orbit performance verification of the NIR FPA used in the GeoFTS instrument. GRIFEX will also demonstrate a GeoFTS like command and high speed data transfer interface between the FPA and a Xilinx Vertex 5 FPGA flight computer.

GeoFTS FPAs have the JPL ROIC bump-bonded (hybridized) with indium metal bumps to a photosensitive diode array as depicted in Figure 12. Hybrid FPAs have flown on numerous Earth science space missions including TES, MODIS, EO-1, and LandSat[15, 16, 17]. The JPL ROIC is made in CMOS which is compatible with common photosensitive detector materials such as silicon p-type, intrinsic n-type (SiPIN) for UV-Vis-NIR sensitivity, and HgCdTe for SWIR-MWIR sensitivity. For GRIFEX JPL collaborated with Raytheon Vision Systems (RVS), a pioneer in high performance SiPIN detectors, to hybridize JPL ROICs with RVS manufactured SiPIN photodiode detector arrays. The GeoFTS NIR FPA is a copy of the GRIFEX FPA. For the GeoFTS SWIR channel, the JPL ROIC is hybridized with a HgCdTe photodiode detector array which RVS recently developed and delivered for the Visible and Infrared Hyperspectral Imager on the European Space Agency Bepi-Colombo mission to Mercury.

The two GeoFTS FPAs with identical ROICs and signal chain electronics cover the GeoFTS science spectral range from 2.5 µm to 0.7 µm and achieve high frame rates at 14 bit resolution. Both FPAs have 128×128 fully working pixels but GeoFTS only uses the center 64×64 pixels to keep the instrument output data rate low enough for downlink by a single K-band transponder.

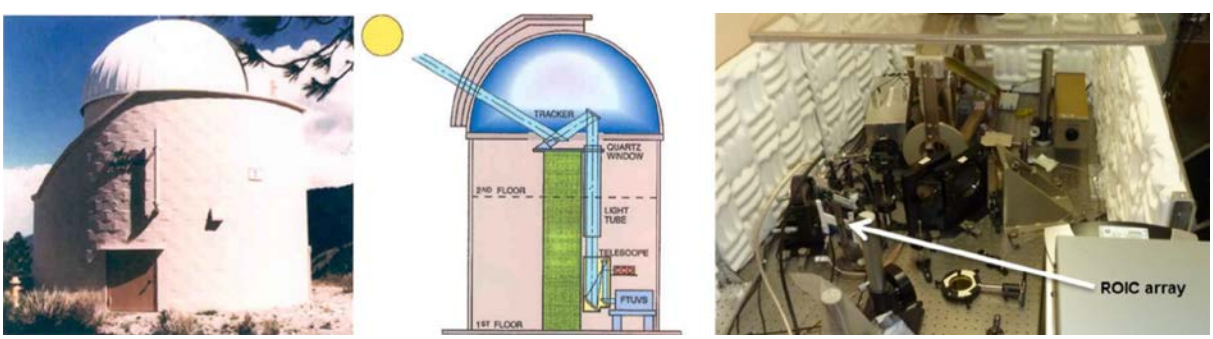

Figure 14. The ROIC array was incorporated in the operational FTUVS instrument at the Table Mountain Observatory.

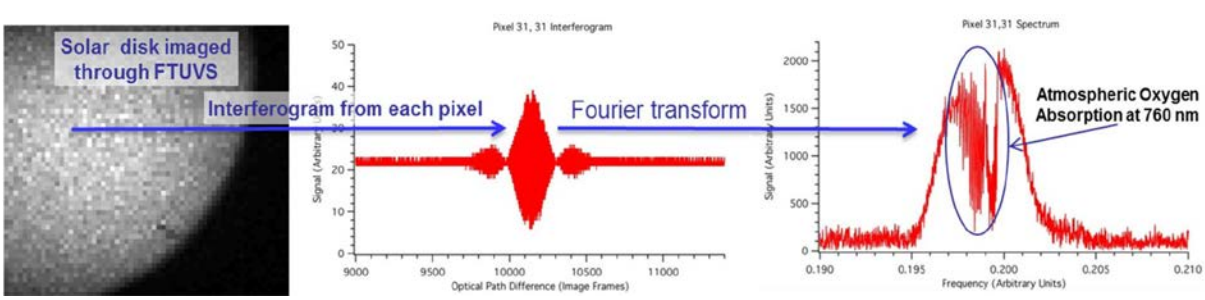

Figure 15. The ROIC array demonstrated the capability for measuring atmospheric composition in the oxygen absorption band.

3.9 Instrument Control Electronics System

The Instrument Control Unit (ICU) manages all instrument systems and operations including science and housekeeping data collection. It provides the instrument command and data interfaces with the spacecraft and instrument power conversion and distribution. The ICU consists of three boards housed in an aluminum enclosure with a 3U CompactPCI backplane. All components are designed and shielded to operate reliably at GEO. The GeoFTS instrument uses the most radiation-tolerant parts that are available at reasonable cost and lead time, and shields these parts to the extent necessary to ensure full functionality for the life of the GeoFTS mission. This strategy has been used on several planetary missions where the environment is far more harsh than GEO. The most important GeoFTS electronic component is the flight computer which is the Xilinx RadHard V5QV FPGA. The GeoFTS unit is similar to the one shown in Figure 16 which was built for the ESTO funded University of Michigan Multipurpose MiniSatellite/CubeSat On-board processing Validation Experiment (M3/COVE) mission[18].

Figure 16. The GeoFTS flight computer is based on the M3/COVE V5QV FPGA flight computer board design.

The GeoFTS FPGA-based flight computer controls the instrument and manages the interfaces to the spacecraft. The reconfigurable Xilinx RadHard Space-Grade FPGA (V5QV) flight computer includes features to mitigate SEE and is rad-hard to a TID of 1Mrad, >200X margin vs. expected exposure of 4 krad per the thick shielding design. The use of an FGPA minimizes size, weight, and power, simplifies the design, and improves signal integrity (fewer signals travel off-chip). The FPGA has multiple IP cores residing in the fabric that provide instrument input/output (I/O) and embedded control functionality. Instrument flight software runs in the FPGA fabric using the MicroBlaze soft-core processor as was done on the COVE mission. The flight software hosts instrument pointing algorithms and simple fault management, leveraging JPL's expertise in attitude control and fault protection design. For internal instrument anomalies, the ICU will autonomously place the instrument in Safe mode, parking the mechanisms in known positions and closing the aperture cover, protecting the instrument from sunlight directly entering the FOV. For external anomalies (e.g., under voltage, over voltage, thermal and pointing excursions, instrument watchdog timeout) the spacecraft will command the instrument to Safe mode then remove power to the ICU but continue power to the instrument survival heaters.

The ICU also includes an engineering I/O board and power distribution board. The engineering I/O board collects 50 analog signals (voltages, temperatures, etc.) from the instrument and multiplexes their signals into the downlink data stream. The ICU controls the aperture cover mechanism, FSM and other instrument components via analog and discrete digital signals. The power board receives +28 VDC from the spacecraft and provides conversion and switching for the other instrument elements.

3.10 Instrument Command and Data Handling System

The GeoFTS single FPGA based command and data handling architecture shown in Figure 17 controls all instrument operations including the interferometer and observational operations. It controls data acquisition from both FPAs in parallel, thus there are two data streams operating simultaneously in the FPGA fabric (with identical cores in each stream). The FPGA acquires data from the NIR and SWIR FPAs at 900 and 450 Mbps, respectively, then reduces the

rates to 96 and 48 Mbps using windowing, encoding, and compression. A data handler IP core acquires both data streams along with instrument engineering data and outputs them via redundant SpaceWire interfaces, each rated at 200 Mbps, to the host spacecraft for downlink. The instrument requires no onboard data processing or storage by the spacecraft. The instrument receives commands and position and attitude state information from the spacecraft via a redundant MIL-STD-1553 bus. Two spare RS-422 serial interfaces are included to provide the option for the instrument to exchange high rate raw gyro data with the spacecraft.

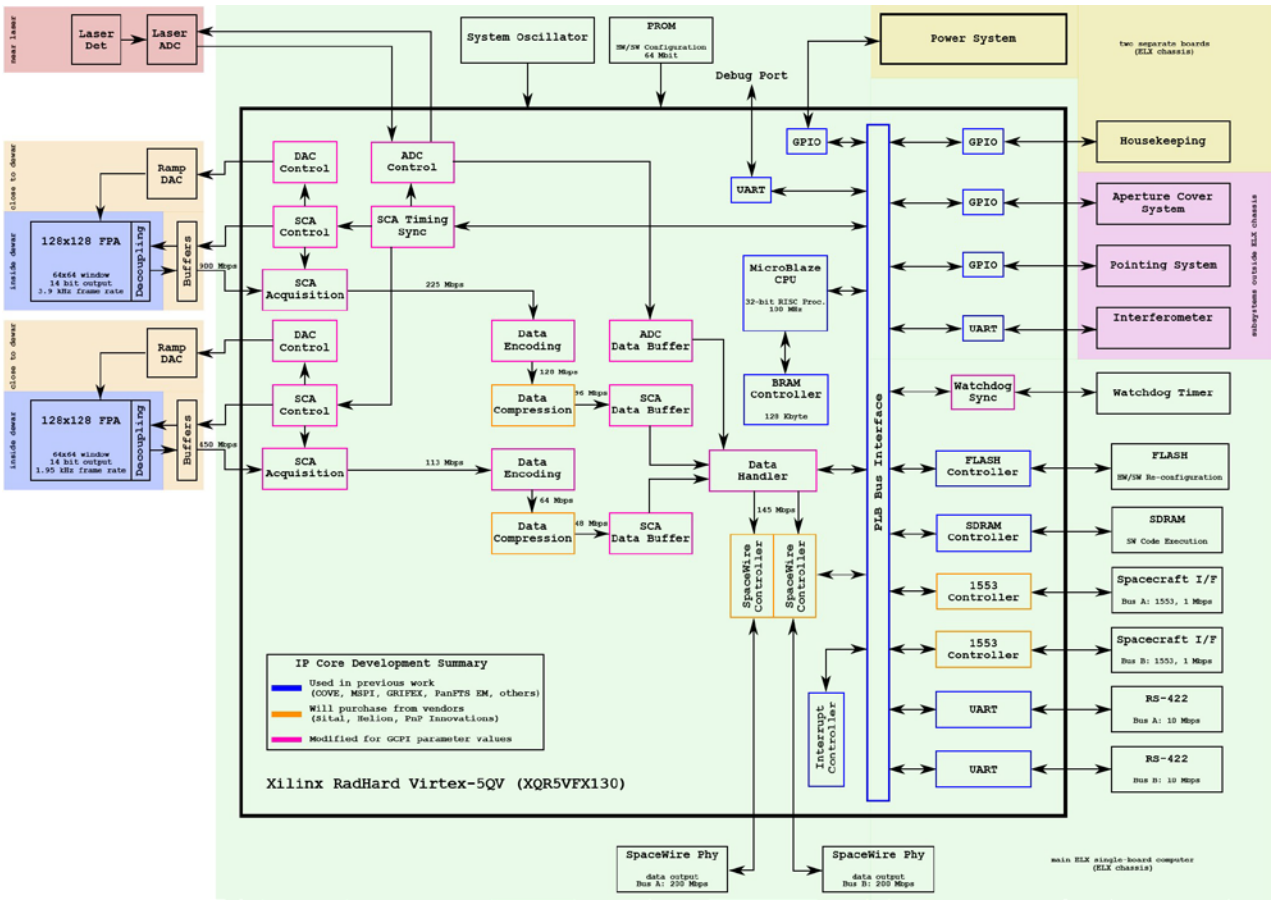

Figure 17. The GeoFTS FPGA flight computer architecture minimizes size, weight, and power, simplifies the ICU system design.

The IP cores shown in Figure 17 are classified into three categories: used in previous instruments (blue), purchased from vendors (orange), and modified for GeoFTS parameter values (magenta). For each single FPA data stream, at least 50% of the cores have been used on other projects or will be acquired from approved vendors. Most of the development occurs in the area of FPA data acquisition, encoding, and data handling. Nearly all cores which directly interact with the CPU have been used on other projects; this type of soft-core CPU architecture is very common. The processing capability of the FPGA listed in Table 1 has robust resource margins.

Table 1. GeoFTS FPGA Resource Margins.

FPGA Resource	GeoFTS Requirement	FPGA Capability	Margin %
DSP block resources	40	320	88%
Look-up-table resources	21600	81920	74%
Flip-flop resources	24900	81920	70%
Block RAM resources	141	298	53%
I/O resources	448	840	47%

3.11 Calibration System

Pre-launch testing of the instrument provides characterization and calibration of key parameters, such as the instrument line shape, needed for accurate measurements and the monitoring of instrument health and performance. Post-launch verification ensures launch environments have not caused changes in instrument characteristics or performance. The primary on-orbit radiometric calibrations are ColdCal and SolarCal. ColdCal tracks radiometric zero levels, read noise and dark noise every mapping interval. To calibrate and track radiometric gain, a daily SolarCal measures sunlight scattered off a Spectralon diffuser on the aperture cover as illustrated in Figure 18 when the sun illuminates the west side of the instrument at the end of daily observations.

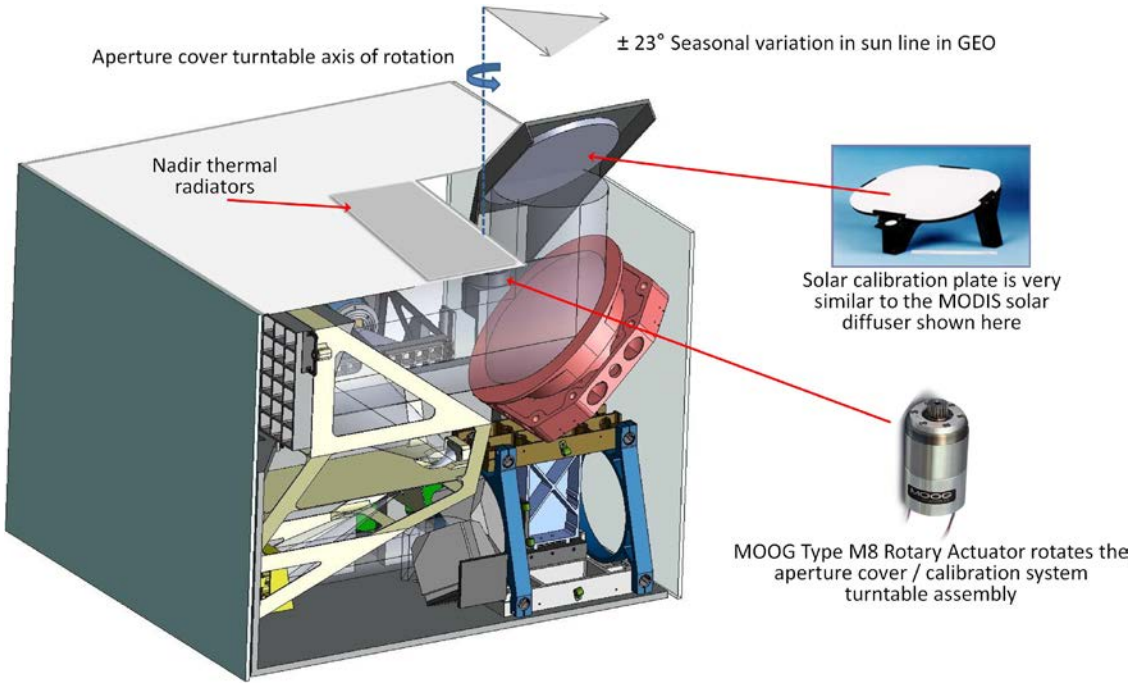

Figure 18. The instrument aperture cover / calibration system provides variable solar viewing angles on the calibration plate to compensate for seasonal variations of the sun line in GEO.

The instrument aperture cover / calibration system has a fixed "garage" structure (not shown) on the nadir face of the instrument that protects the calibration plate when it is not in use, and a single turntable structure that carries the aperture cover, nadir radiator cover (aperture cover apron), and calibration plate, which all rotate simultaneously in and out of their service and stowed locations. For simplicity only the calibration plate portion of the system is shown in Figure 18. The calibration system axis of rotation is parallel to the nadir line-of-sight which enables selectable solar viewing angles on the calibration plate to compensate for the seasonal ±23°sun line view in GEO.

To provide the calibration functionality required while protecting the instrument and calibration components when not making observations the calibration system has three angular positions: (1) when observations are not being made by the instrument the aperture cover seals the instrument to prevent solar heating and contamination, the aperture cover apron covers nadir radiators to prevent solar heating, and the calibration plate is stowed in the garage to prevent exposure to solar radiation, (2) for science or ColdCal observations the system rotates the aperture cover out of the line of sight as the calibration plate rotates but continues to be protected in the garage, and the aperture cover apron rotates to expose the radiators that cool the FPAs, (3) when SolarCal observations are being made the system rotates the calibration plate out of stowed location and into the line of sight as depicted in Figure 18, and the aperture cover apron rotates to shade the nadir radiators. The calibration plate is a Labsphere Spectralon[19] solar diffuser which is a Lambertian reflector with minimal spectral variation over the GeoFTS spectral range. Spectralon has been flown successfully on numerous space missions[20, 21, 22, 23]. The GeoFTS solar diffuser is very similar to the MODIS solar diffuser shown in Figure 18. The aperture cover / calibration system turntable is driven by a Moog type M8 Rotary Incremental Actuator[24, 25]. The Moog M8 stepper motor has flown on several space missions as far back as NASA's Mars 98. It has been qualified to 1.6 million revolutions, which provides robust margin for the few thousand actuations of the GeoFTS mission.

3.12 Thermal Control System

The GeoFTS instrument all passive thermal control system is completely independent of the host spacecraft. The design uses JPL's passive cooling technology developed for AIRS[26], TES[27], and M3[28]. Those instruments required multi-stage passive coolers to reach temperatures below 170K while IASI[29] and PMIRR[30] multi-stage passive coolers reached temperatures below 100K. GeoFTS's comparatively warm (200 and 250K), low power FPAs allow the use of a smaller single-stage thermal control system design illustrated schematically in Figure 19.

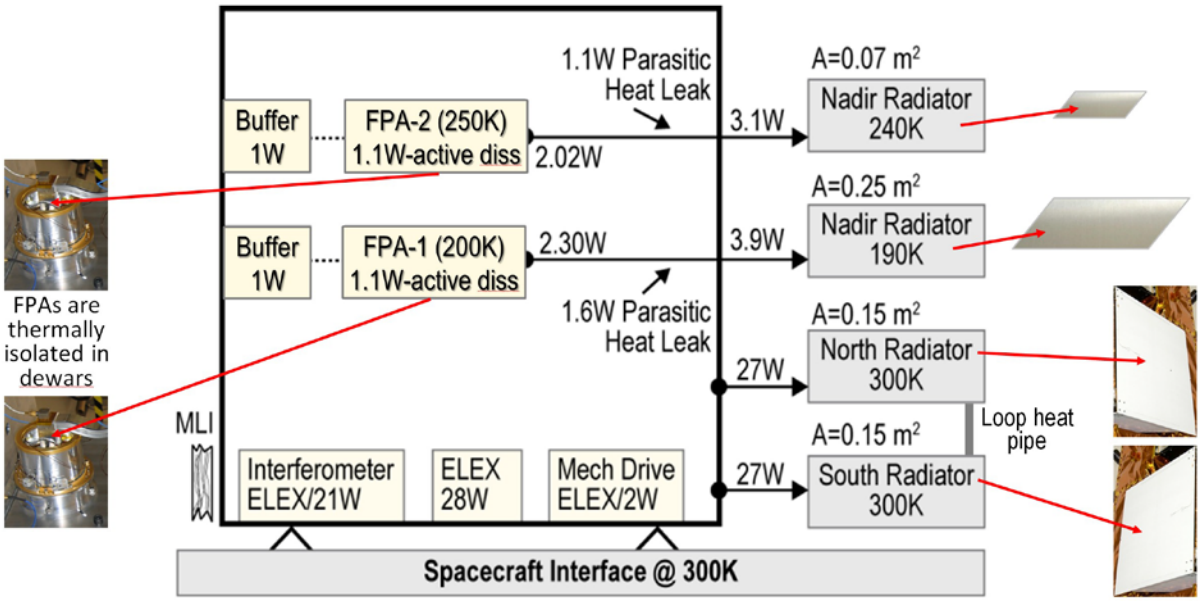

Figure 19. The GeoFTS all passive thermal control system is completely independent of the host spacecraft.

The instrument is mounted on the spacecraft with a nadir view. Low conductance mounts provide thermal isolation. Multi-Layer Insulation (MLI) and internal heaters keep the instrument in a narrow operating temperature range. The FPAs are housed in dewars which are essentially copies of the OCO and OCO-2 dewars made by SDL. The dewar has three concentric cylinders as shown in Figure 11 made from thin G10 materials, mechanically connected in series, which creates a large thermal resistance between the cold finger and the rest of the focal plane assembly, and minimizes parasitic heat loads on the FPAs. Each FPA is connected to a radiator by a high conductance K-core flexible strap also made by SDL and used on OCO and other missions. Both FPAs are cooled by simple nadir facing flat surface radiators covered with commercially available optical solar reflectors which provide low solar absorption and high thermal emittance to minimize the radiator operating temperature. The Corning 0214 microsheet optical solar reflector resists radiation-induced darkening and damage in hostile space environments. Silver is used as the primary coating because it provides optimum solar reflectance.

Operational heaters located near the FPAs continuously maintain their temperature to approximately ±0.1 K. During science and calibration observations the nadir-facing radiators are in the shadow of the spacecraft so are not exposed to the sun. They see cold space with only small Earth-radiated infrared heat loads on the radiators. This design guarantees that the nadir radiators maintain the FPAs at the required set points during daily observations. When the instrument is not making observations, the apron of the aperture cover turntable shields the nadir-facing radiators from sunlight. This keeps their temperature below the FPAs operational temperature. Overall, this thermal control design provides a FPA heat load margin of 50%.

Heaters mounted on the FPAs are capable of warming them to 290 K if needed for decontamination. Survival heaters maintain the hardware within non-operating allowable flight temperature limits when the instrument is powered off (e.g., in response to a spacecraft safe mode event).

Instrument electronics heat is radiated to space via simple white painted radiators on the north and south faces on the instrument as was done for TES[31] and other missions. Constant conductance heat pipes thermally couple the north and south facing radiators to share the electronics heat loads. This provides a virtually constant equipment temperature.

3.13 GeoFTS Mission Implementation Concept

The GeoFTS instrument is designed to operate as a secondary hosted payload on a GEO commercial communications satellite as depicted in Figure 20 and leverage existing commercial geostationary communications satellite infrastructure.

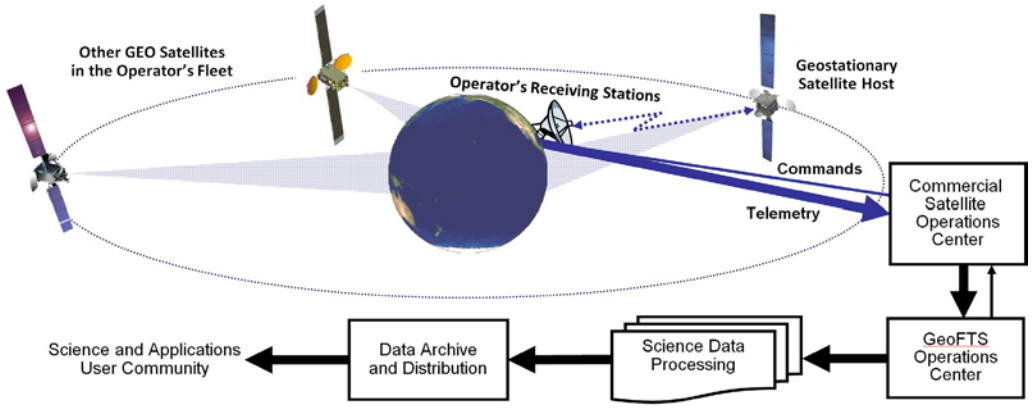

Figure 20. The GeoFTS hosted payload implementation approach leverages existing commercial geostationary communications satellite infrastructure to maximize science return and minimize technical, cost and schedule risks.

The GeoFTS instrument design provides excellent compatibility with GEO spacecraft. The instrument can tolerate the electromagnetic interference environment of a communications satellite and has minimal impact as a shared payload on a commercial communications mission. The instrument is as small, self-contained, and as independent of the spacecraft as possible. It places no demands on the spacecraft for thermal control, nor stringent demands on spacecraft pointing capability. The instrument has redundant, standardized interfaces with the spacecraft for power, command and telemetry, and high speed data output. These few simple spacecraft interfaces minimize the spacecraft modifications needed to host the GeoFTS instrument. This also minimizes the cost and complexity of development, integration and test with the spacecraft, and operations. Commercial GEO communications satellites have a service life greater than 15 years and at the beginning of life they have significant excess power and telemetry capacity. The GeoFTS instrument has no life limiting elements thus it can operate for as long as the spacecraft can provide resources. After five to ten years of operation the spacecraft capabilities will degrade to a point where there is no longer sufficient margin to operate the GeoFTS instrument without interfering with the satellite's primary mission functions. At that point the GeoFTS instrument would be turned off by the spacecraft owner/operator unless the primary mission was modified in a way that permitted the continued operation of GeoFTS.

3.14 GeoFTS Mission Operations and Data Flow

GeoFTS operations are implemented by a combination of the host operator's facilities and JPL instrument and science team personnel as depicted in Figure 21. GEO enables continuous data transfer from the instrument to ground receiving stations in a bent pipe downlink arrangement through one or more spacecraft transponders. The GeoFTS operations center at JPL interfaces with the host mission operations center which controls the spacecraft using their own ground system. They accept and forward command files from JPL to the GeoFTS instrument. GeoFTS data is transmitted from the satellite operator's ground operations center to the GeoFTS Operations Center at JPL which processes data and provides it and data products stored at a NASA DAAC for access by the science community.

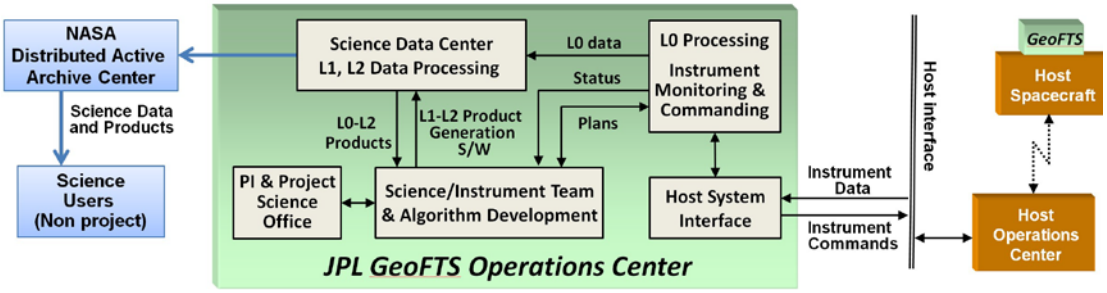

Figure 21. GeoFTS operations use a combination of the host operator's infrastructure and JPL facilities and staff.

4. PANFTS DEVELOPMENT AND TESTING IN SUPPORT OF GEOFTS

The GeoFTS instrument design and major components have been developed by the NASA Earth Science Technology Instrument Incubator Program (IIP) funded Panchromatic Fourier Transform Spectrometer (PanFTS) activity. However, there are important differences between PanFTS and the GeoFTS instrument. The GeoFTS instrument needs NO technology development; it makes simultaneous measurements in the near infrared and short wave infrared bands which is a capability developed and demonstrated by the PanFTS IIP-07 task. The PanFTS IIP-10 activity is continuing to develop the technology to enable an additional capability for making simultaneous measurements in several spectral bands from the ultraviolet to midwave infrared to meet the atmospheric science requirements for the GEO-CAPE mission.

4.1 PanFTS Breadboard Instrument

Figure 22 shows the PanFTS breadboard instrument that demonstrated the capability for simultaneous measurements in the Vis-NIR and SWIR spectral bands.

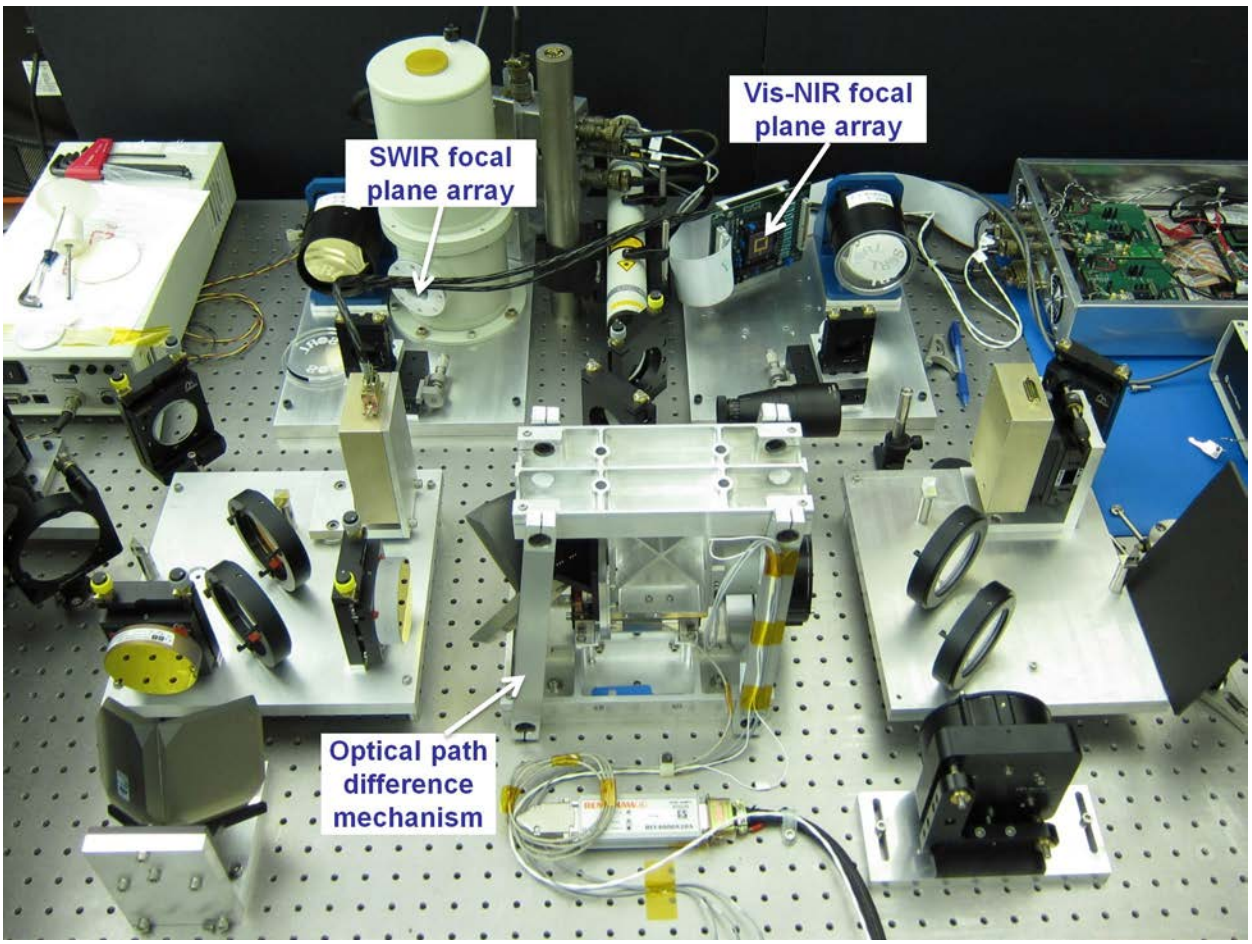

Figure 22. The PanFTS breadboard instrument testing in the laboratory

The SWIR side of the PanFTS breadboard is the core of the interferometer portion of the GeoFTS instrument. The breadboard optical beam size, the ratio of FPA pixel size to nadir pixel spatial resolution, interferometer optical path difference and moving mirror velocity all match the GeoFTS observing scenario from GEO. Laboratory testing demonstrated the capability for panspectral interferometer functionality corresponding to these operational parameters. A nitrogen dioxide (NO_2) gas cell was placed in front of the light beam at the entrance aperture of the interferometer. Figure 23 shows that the interferometer was able to simultaneously measure NO_2 at IR and visible wavelengths.

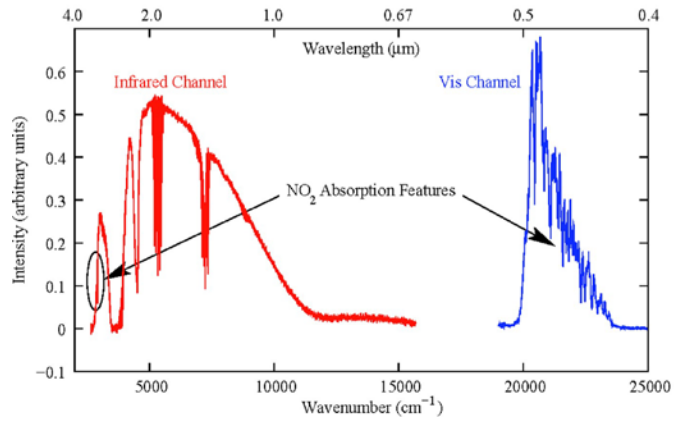

Figure 23. PanFTS breadboard instrument made simultaneous IR and Vis measurements of NO_2

In late 2011 the PanFTS breadboard was deployed at the California Laboratory for Atmospheric Remote Sensing (CLARS). The CLARS observatory shown in Figure 24 overlooks the Los Angeles basin from a geo-stationary altitude of 1.7 km. Several different targets were measured including a quartz-halogen lamp, sunlight scattered from a Spectralon plate located on the roof of the observatory building and from a site in the basin located about 10 km from the instrument. Spectra were recorded simultaneously by the SWIR and NIR FPAs. Interferograms from the NIR channel were transformed to produce spectra of the oxygen A-band at 13200 cm^{-1}. In the SWIR channel, spectra were dominated by thermal emission from the uncooled interferometer elements, but spectra of carbon dioxide, methane and water vapor were prominently observed. This demonstrated the end-to-end functionality for transforming NIR and SWIR photons at the input to interferograms over a spectral range much like the capability provided by the GeoFTS instrument.

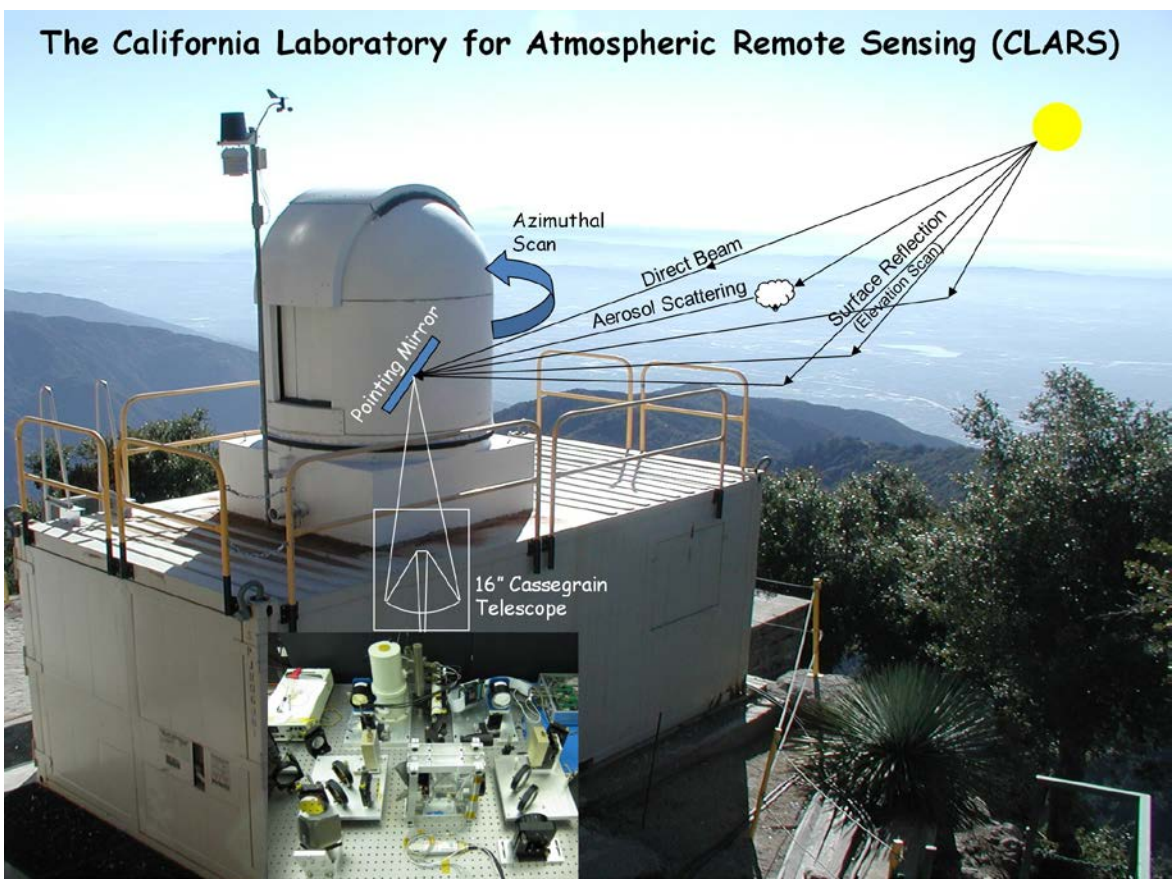

Figure 24. GeoFTS like measurements have been demonstrated by the PanFTS breadboard at CLARS.

4.2 OPDM Development and Life Testing

Three full size OPDMs have been built. The first is operational in the PanFTS breadboard making measurements at the CLARS observatory. A second unit completed accelerated life testing in a space like environment which is described below. The third unit is in storage and available for diagnostic testing or as a spare for future interferometer development and testing.

Figure 25 shows a flight size high precision, cryogenic OPDM prior to starting testing under simulated space conditions to demonstrate the stability and reliability of the design.

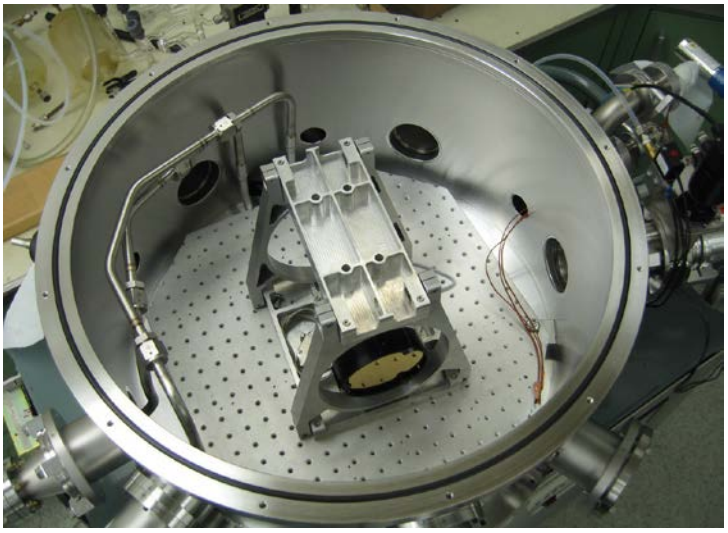

Figure 25. OPDM inside the thermal vacuum chamber prior to testing

The OPDM was cycled over its full range of travel (0 mm to 50 mm), simulating operation under mission conditions. The OPDM completed a life test of over 2.6 million full translation scan cycles in vacuum at minus 100 degrees Celsius with no measurable changes in behavior. The primary function of the OPDM is to translate the moving mirror element of the GeoFTS interferometer. The two most important OPDM performance characteristics are to keep the mirror perpendicular to the optical beam, and to smoothly translate the mirror with minimal jitter. PanFTS and GeoFTS use cube corner optics for the IR channels which needs no compensation to keep the IR optical beam aligned in the interferometer. The PanFTS visible-ultraviolet channel uses flat mirrors. For PanFTS the flat mirror is kept perpendicular to the optical beam by a piezo-actuated tip/tilt stage. The ability of the stage to keep the mirror aligned was also unchanged after the 2.6 million cycle life test. The translation stability of the OPDM after the life test is shown in Figure 27. Test results show the OPDM velocity stability error is 0.6% RMS over the 5 cm travel which is excellent and well below the 1.0% design requirement.

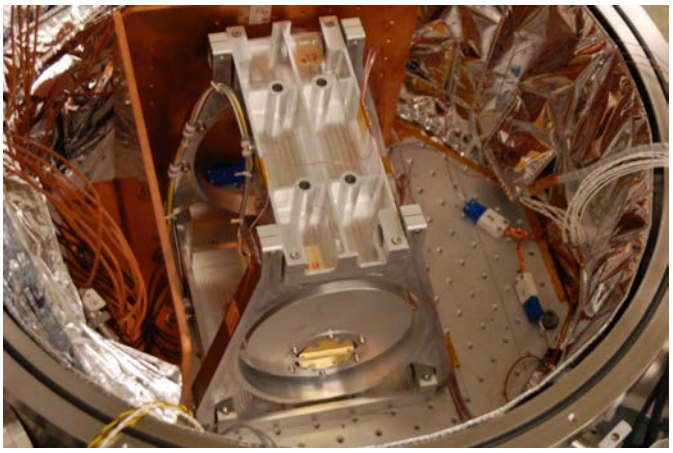

Figure 26. OPDM inside the thermal vacuum chamber after life testing

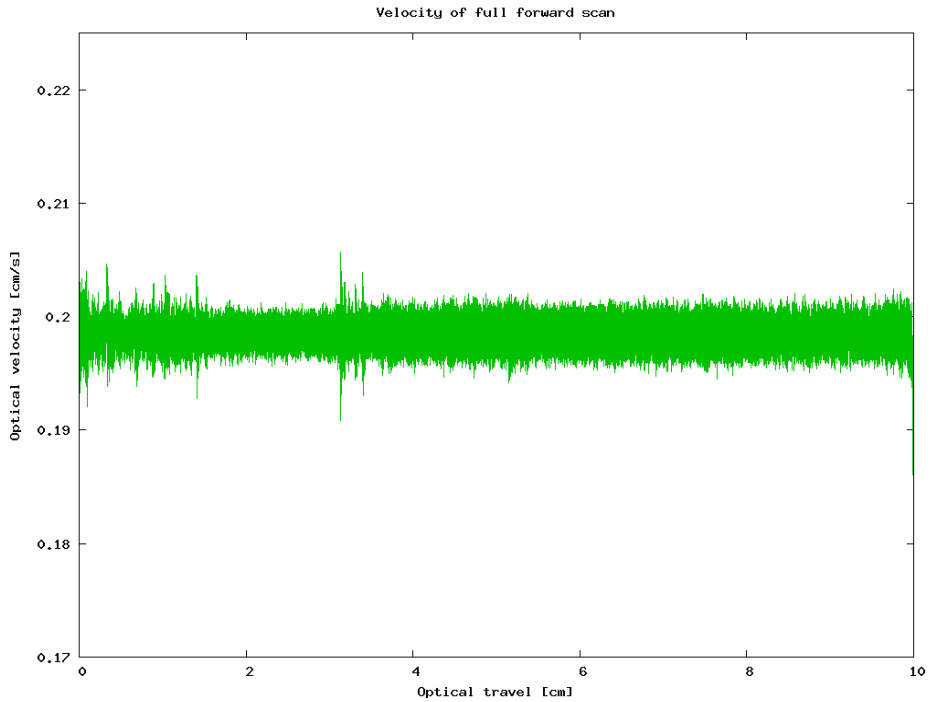

Figure 27 OPDM velocity stability was unchanged after 2.6 million cycles in vacuum at minus 100 degrees C

SUMMARY

GeoFTS is an imaging spectrometer designed for a GEO earth science mission to measure key atmospheric trace gases and process tracers related to climate change and human activity. GEO allows GeoFTS to continuously stare at a region of the earth for frequent sampling to capture the variability of biogenic fluxes and anthropogenic emissions from city to continental spatial scales and temporal scales from diurnal, synoptic, seasonal to interannual. The CO_2/CH_4/CO/CF measurement suite in the near infrared spectral region provides the information needed to disentangle natural and anthropogenic contributions to atmospheric carbon concentrations and to minimize uncertainties in the flow of carbon between the atmosphere and surface. The instrument uses a Michelson interferometer design built with all high TRL components in a modular configuration to reduce complexity and cost. The instrument's two advanced technologies, the OPDM and the 128x128 all-digital FPA with in-pixel digitalization have demonstrated the capabilities needed for GeoFTS. The half meter cube size GeoFTS instrument is self-contained and as independent of the spacecraft as possible with simple spacecraft interfaces, making it ideal to be a "hosted" payload on a commercial communications satellite mission. The hosted payload approach for measuring the major carbon-containing gases in the atmosphere from the geostationary vantage point will affordably advance the scientific understating of carbon cycle processes and climate change.

ACKNOWLEDGEMENTS

Support from the NASA Instrument Incubator Program is gratefully acknowledged. The research described in this publication was carried out at the Jet Propulsion Laboratory, California Institute of Technology under a contract with the National Aeronautics and Space Administration. Copyright 2012, California Institute of Technology. Government sponsorship acknowledged.

REFERENCES

[1] "Carbon Budget 2010. An annual update of the global carbon budget and trends," Global Carbon Project, 2011, http://www.globalcarbonproject.org/index.htm

[2] National Aeronautics and Space Administration 2010 Science Plan for NASA's Science Mission Directorate http://science.nasa.gov/media/medialibrary/2010/03/31/Science_Plan_07.pdf

[3] "A U.S. Carbon Cycle Science Plan," A report of the University Corporation for Atmospheric Research supported by NASA, DOE, USDA, USGS, NOAA, NSF, and NIST http://www.carboncyclescience.gov/USCarbonCycleSciencePlan-August2011.pdf

[4] Cohen, B. (2004), Urban Growth in Developing Countries: A Review of Current Trends and a Caution Regarding Existing Forecasts, World Development, 32, 23-51. http://www7.nationalacademies.org/dbasse/Cities_Transformed_World_Development_Article.pdf

[5] M. R. Gunson, M. M. Abbas, M. C. Abrams, M. Allen, L. R. Brown, T. L. Brown, A. Y. Chang, A. Goldman, F. W. Irion, L. L. Lowes, E. Mahieu, G. L. Manney,1 H. A. Michelsen, M. J. Newchurch, C. P. Rinsland, R. J. Salawitch, G. P. Stiller, G. C. Toon, Y. L. Yung, and R. Zander, "The Atmospheric Trace Molecule Spectroscopy (ATMOS) experiment: Deployment on the ATLAS Space Shuttle missions", Geophys. Res. Lett., 23, 2333-2336, 1996

[6] Beer, R., T.A. Glavich and D.M. Rider, "Tropospheric Emission Spectrometer for the Earth Observing System AURA satellite", Appl. Opt., 40, 2356-2367 (2001).

[7] H. Bloom, "The Cross-Track Infrared Sounder (CrIS): A sensor for operational meterological remote sensing," in Optical Remote Sensing, A. Sawchuk, ed., Vol. 52 of OSA Trends in Optics and Photonics (Optical Society of America, 2001), paper JTuB1.

[8] T Hamazaki, T., Kaneko, Y., Kuze, A., and Kondo, K.: Fourier transform spectrometer for greenhouse gases observing satellite (GOSAT), in: Proceedings of SPIE, vol. 5659, p. 73, 2005. doi: 10.1117/12.581198

[9] Verly, P., Hybrid approach for rugate filter design, Applied Optics, Vol. 47, No. 13, 1 May 2008

[10] Lockwood, R. B. "Advanced Responsive Tactically-Effective Military Imaging Spectrometer (ARTEMIS) development and on-orbit focus"; Geoscience and Remote Sensing Symposium (IGARSS 2008)

[11] S. Sander et al., Panchromatic Fourier Transform Spectrometer (PanFTS) for Geostationary Measurements of Atmospheric Composition, NASA Earth Science Technology Forum, June 2011.

[12] D. Rider et al., Fast Imaging Detector Readout Circuits with In-Pixel ADCs for Fourier Transform Imaging Spectrometers, NASA Earth Science Technology Forum, June 2011.

[13] Cageao, R. P.;Blavier, J.-F.;McGuire, J. P.;Jiang, Y.;Nemtchinov, V.;Mills, F. P.; Sander, S. P. High-Resolution Fourier-Transform Ultraviolet-Visible Spectrometer for the Measurement of Atmospheric Trace Species: Application to OH, Appl. Opt., vol. 40, p. 2024, 2001.

[14] http://science.jpl.nasa.gov/TableMountain/index.cfm

[15] MODIS focal plane assemblies, http://modis.gsfc.nasa.gov/about/focplane.php

[16] EO-1 (Earth Observing-1), http://www.eoportal.org/directory/pres_EO1EarthObserving1.html

[17] Raytheon, http://www.raytheon.com/capabilities/products/stellent/groups/public/documents/asset/cms04_018836.pdf.

[18] Pingree, P. J. "Technology readiness level (TRL) advancement of the MSPI on-board processing platform for the ACE decadal survey mission"; NASA ESTO Earth Science Technology Forum, 2011, Pasadena, USA, http://esto.nasa.gov/conferences/estf2011/papers/Pingree_ESTF2011.pdf.

[19] Labsphere. http://www.labsphere.com/products/reflectance-standards-andtargets/reflectance-targets/spectralon-targets.aspx

[20] Bruegge, C. J.;Stiegman, A. E.;Rainen, R. A. et al. Use of spectralon as a diffuse reflectance standard for in-flight calibration of earth-orbiting sensors, Opt. Eng. 1993, 32, 805.

[21] Xiong, X.;Erives, H.;Xiong, S. et al. Performance of Terra MODIS solar diffuser and solar diffuser stability monitor, Proceedings of SPIE 2005, 5882.

[22] Kuze, A.;Suto, H.;Nakajima, M. et al. Thermal and near infrared sensor for carbon observation Fourier-transform spectrometer on the Greenhouse Gases Observing Satellite for greenhouse gases monitoring, Appl. Optics 2009, 48, 6716.

[23] Oudrari, H. http://modis.gsfc.nasa.gov/sci_team/meetings/201001/presentations/cal/oudrari.pdf

[24] Moog. http://www.moog.com/products/actuators-servoactuators/space/spacecraftmechanisms/rotary-actuators/type-m8-rotary-incremental-actuator/

[25] Nabandian, R. "Micro-3 high precision low disturbance rotary actuator"; 13th European Space Mechanisms and Tribology Symposium-ESMARS, 2009, Vienna, Austria,

[26] Aumann, G.; Miller, C. Atmospheric Infrared Sounder (AIRS) on the earth observing system, Proceedings of SPIE 1995, 2583, 332.

[27] Rodriguez, J. I. Thermal desing of the Tropospheric Emission Spectrometer instrument, 30th SAE Technical Paper Series 2000, 2000-01-2274.

[28] Pieters, C. M.;Boardman, J.;Buratti, B. et al. The Moon Mineralogy Mapper (M3) on Chandrayann-1, Current Science 2009, 96, 500.

[29] Simeoni, D.;Astruc, P.;Miras, D. et al. Design and development of IASI instrument, Proceedings of SPIE 2004, 5543, 208.

[30] McCleese, D. J.;Haskins, R. D.;Schofield, J. T. et al. Atmosphere and climate studies of Mars using the Mars-Observer Pressure Modulator Infrared Radiometer, J. Geophys. Res.-Planets 1992, 97, 7735.

[31] Rodriguez, J. I.;Na-Nakornpanom, A.;Rivera, J. G. et al. "On-orbit performance of the TES loop heat pipe heat rejection system"; 38th SAE Technical Paper Series, 2008, San Francisco, USA,