International Conference on Environmental Systems

AIAA
The World's Forum for Aerospace Leadership

Thermal Testing of the Compositional InfraRed Imaging Spectrometer (CIRIS)

Daniel F. Berisford, Kevin P. Hand, Paulo J. Younse, Didier Keymeulen, and Robert Carlson

Jet Propulsion Laboratory, California Institute of Technology, Pasadena, CA 91109

42nd ICES, 15-19 July 2012, San Diego, California

Copyright 2012 California Institute of Technology
government sponsorship acknowledged

Traditional Grating Spectroscopy

- Optical grating separates light spatially onto detector array

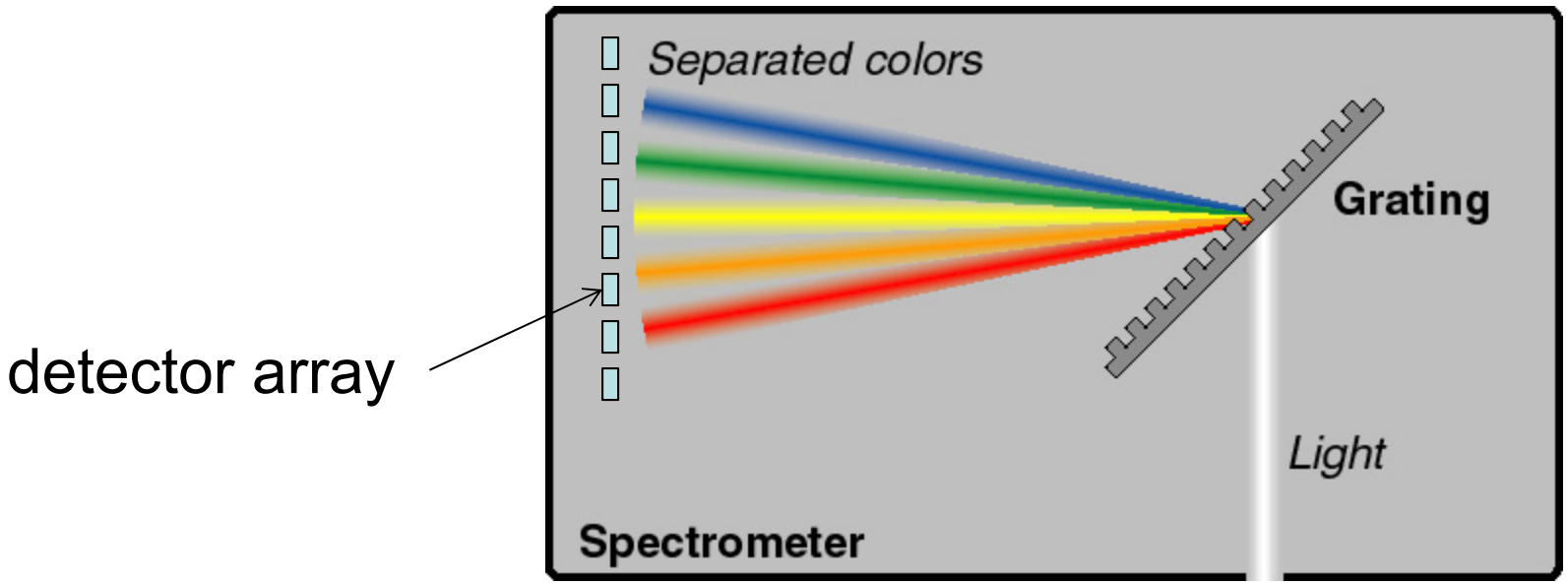

Image from: http://www.ibsen.dk/technology/images/design/modules/spectrometer-sketch.jpg

FTIR spectroscopy

- Interferometry separates light temporally

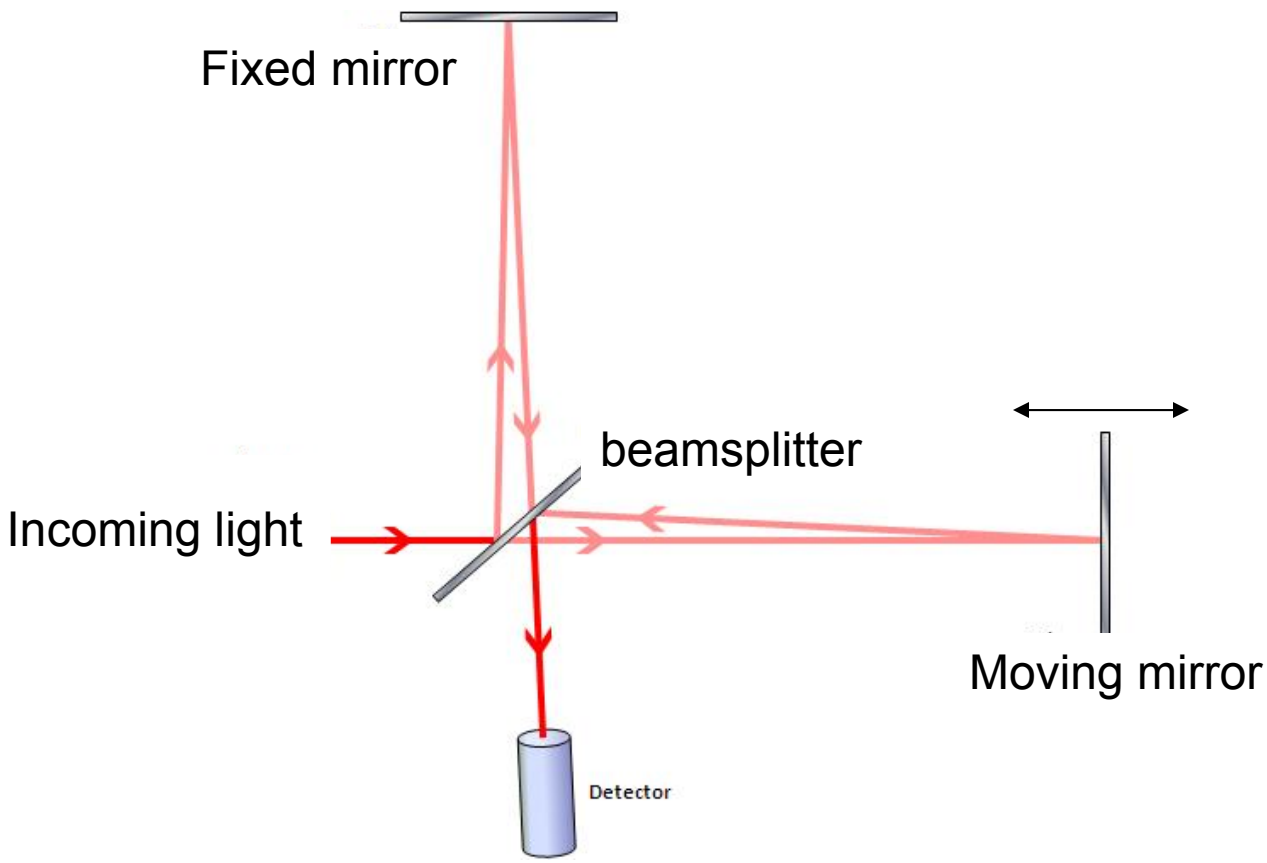

Image from http://www.oil-analysis.org/ftir_testing.html

CIRIS Uses a rotating refractor to induce optical path difference

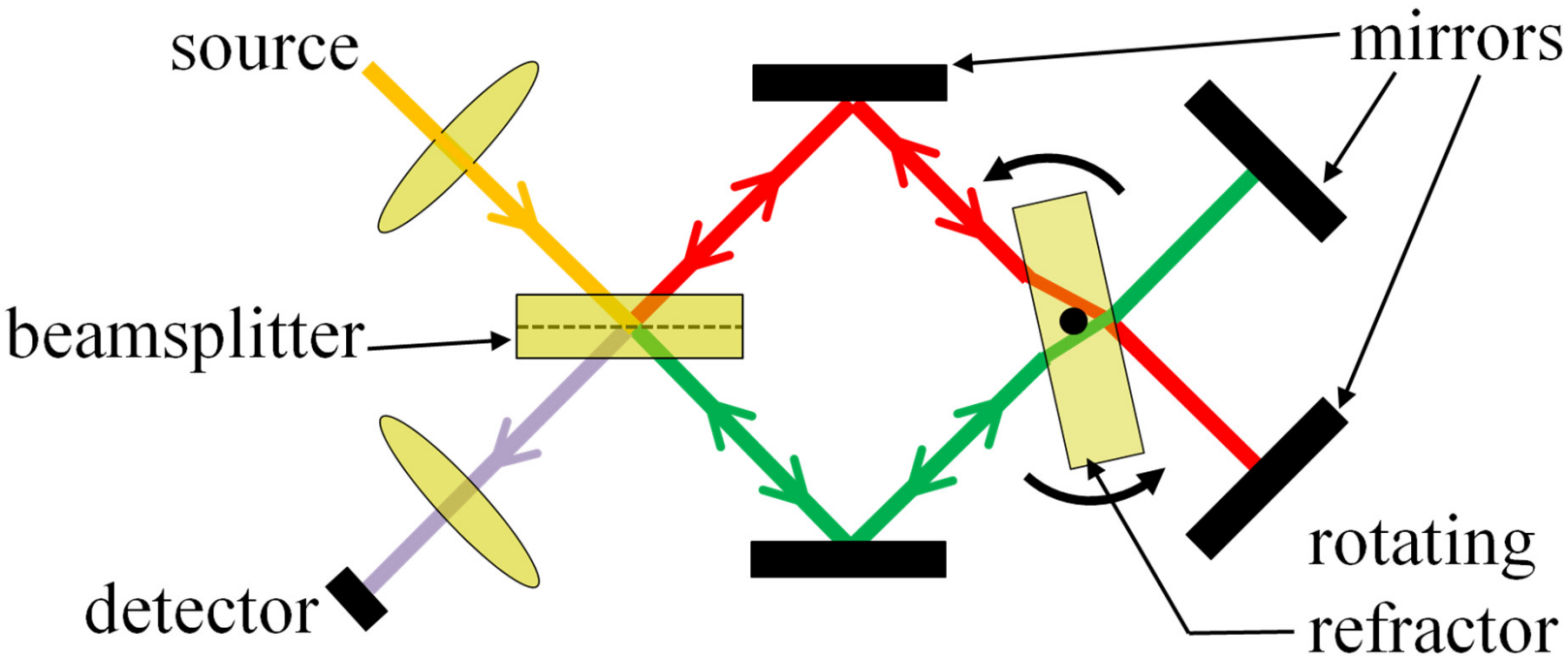

CIRIS

- Ultra-compact
- Intrinsically rad-hard
- Mechanically simple
- Leightweight
- Captures photons of interest

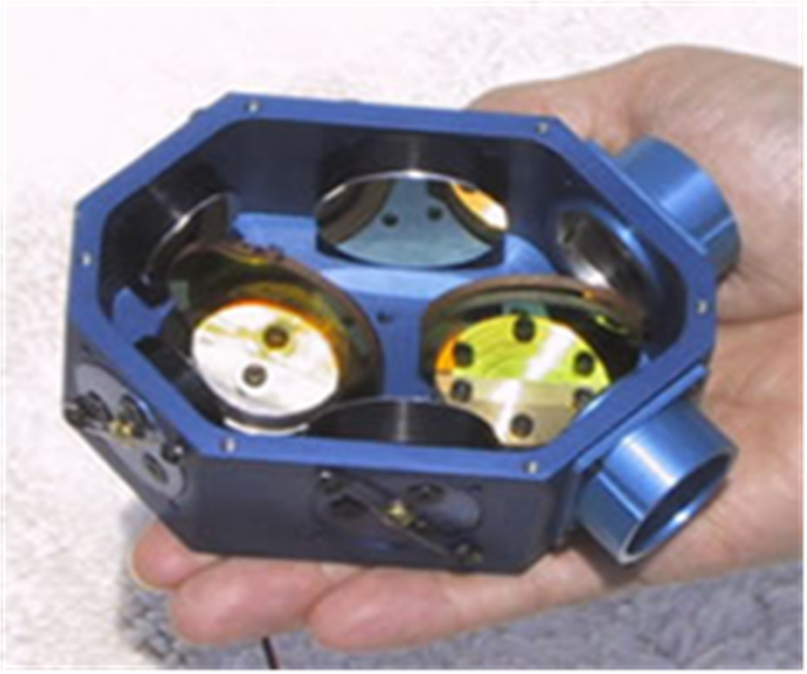

Thermal Vacuum test setup

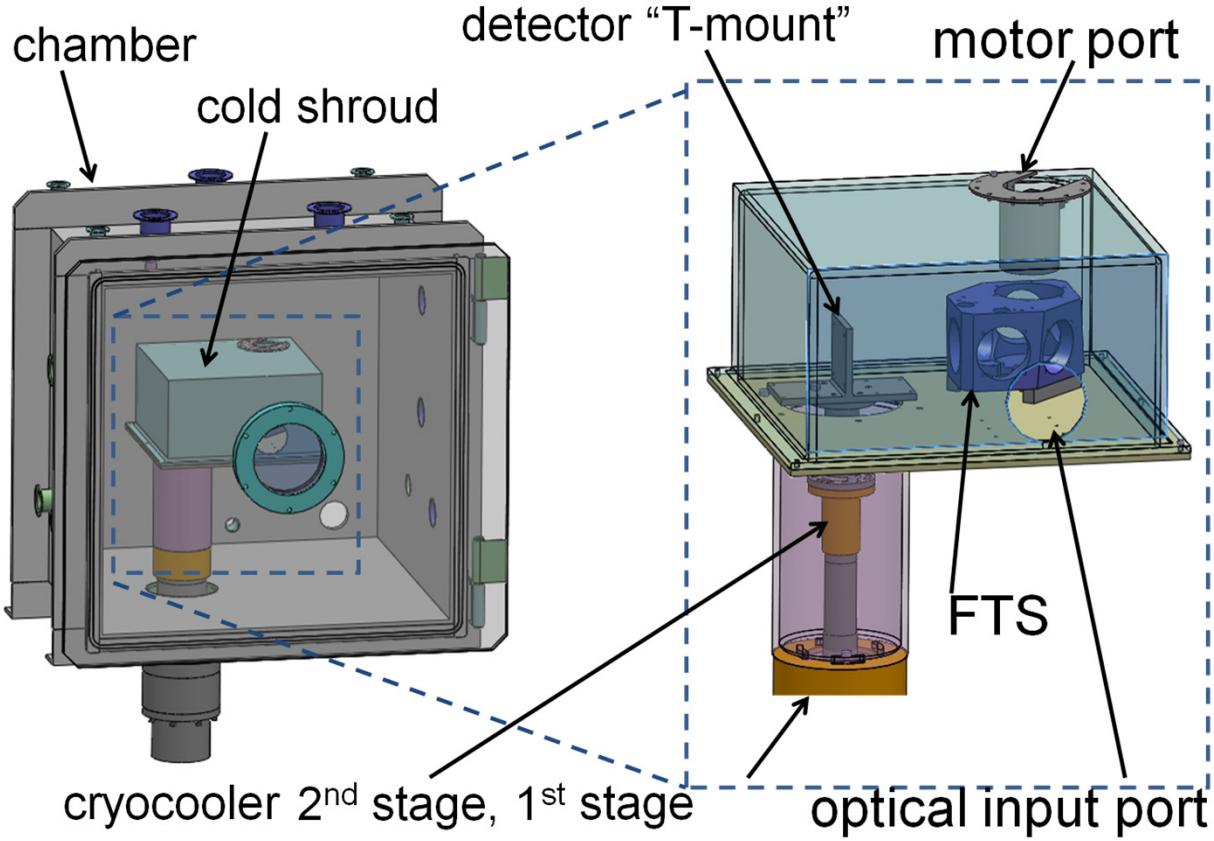

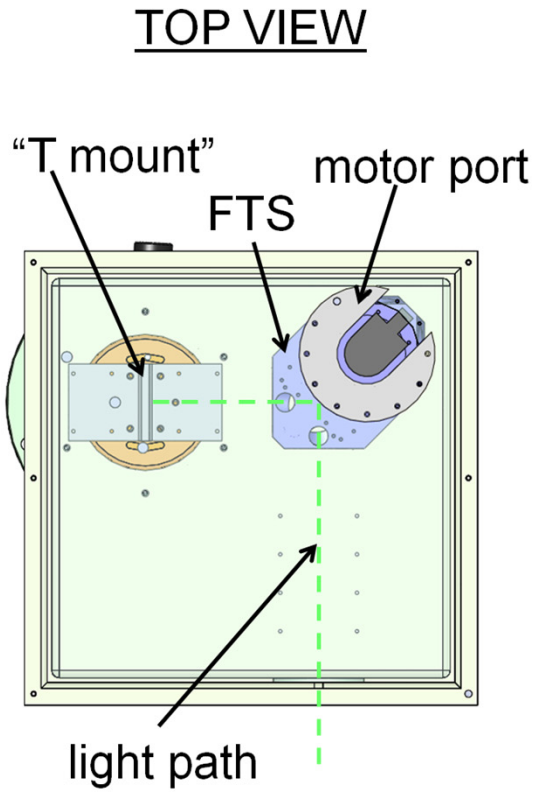

T/Vac Chamber

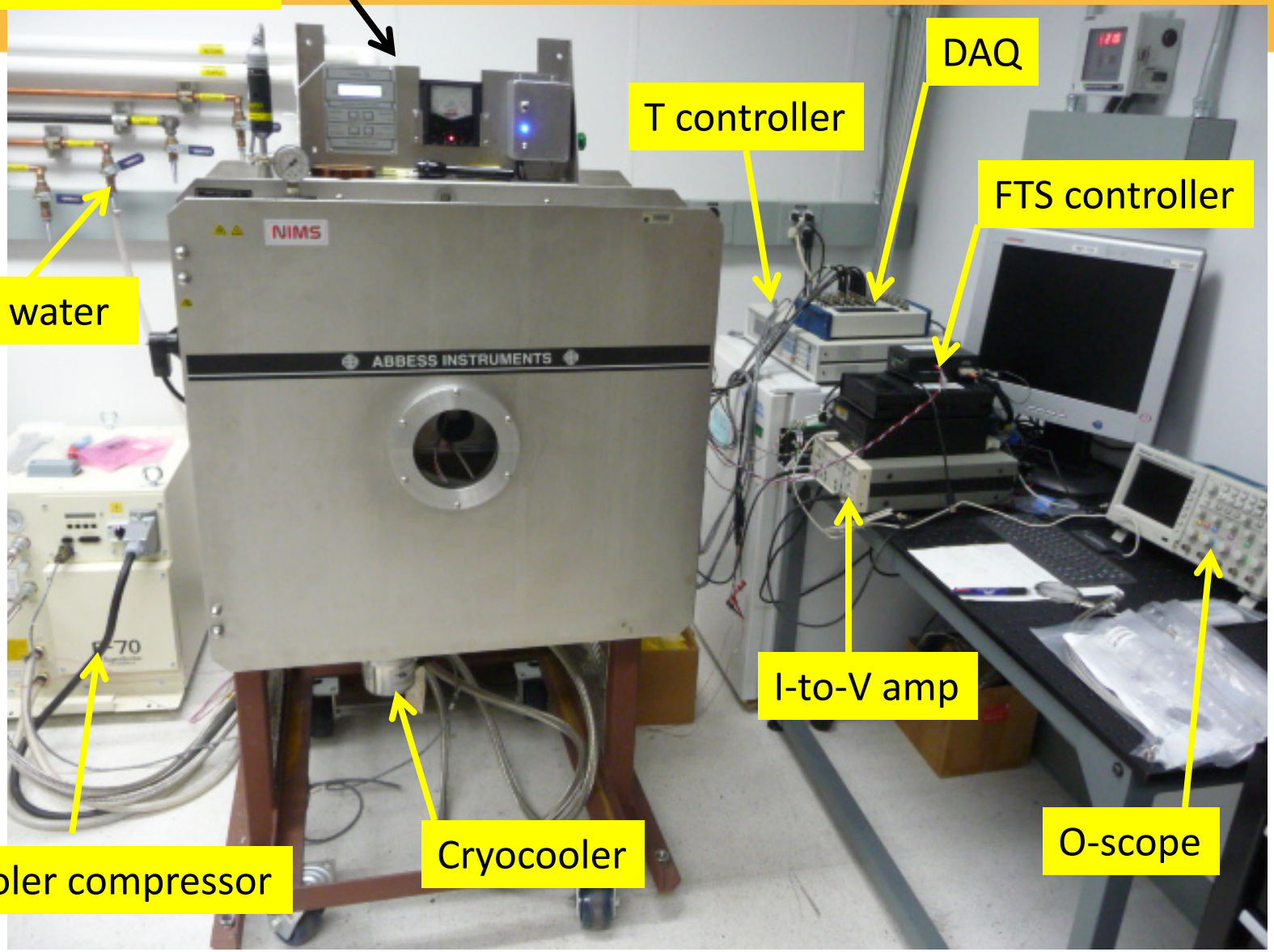

Inside Chamber View w/o Box Top

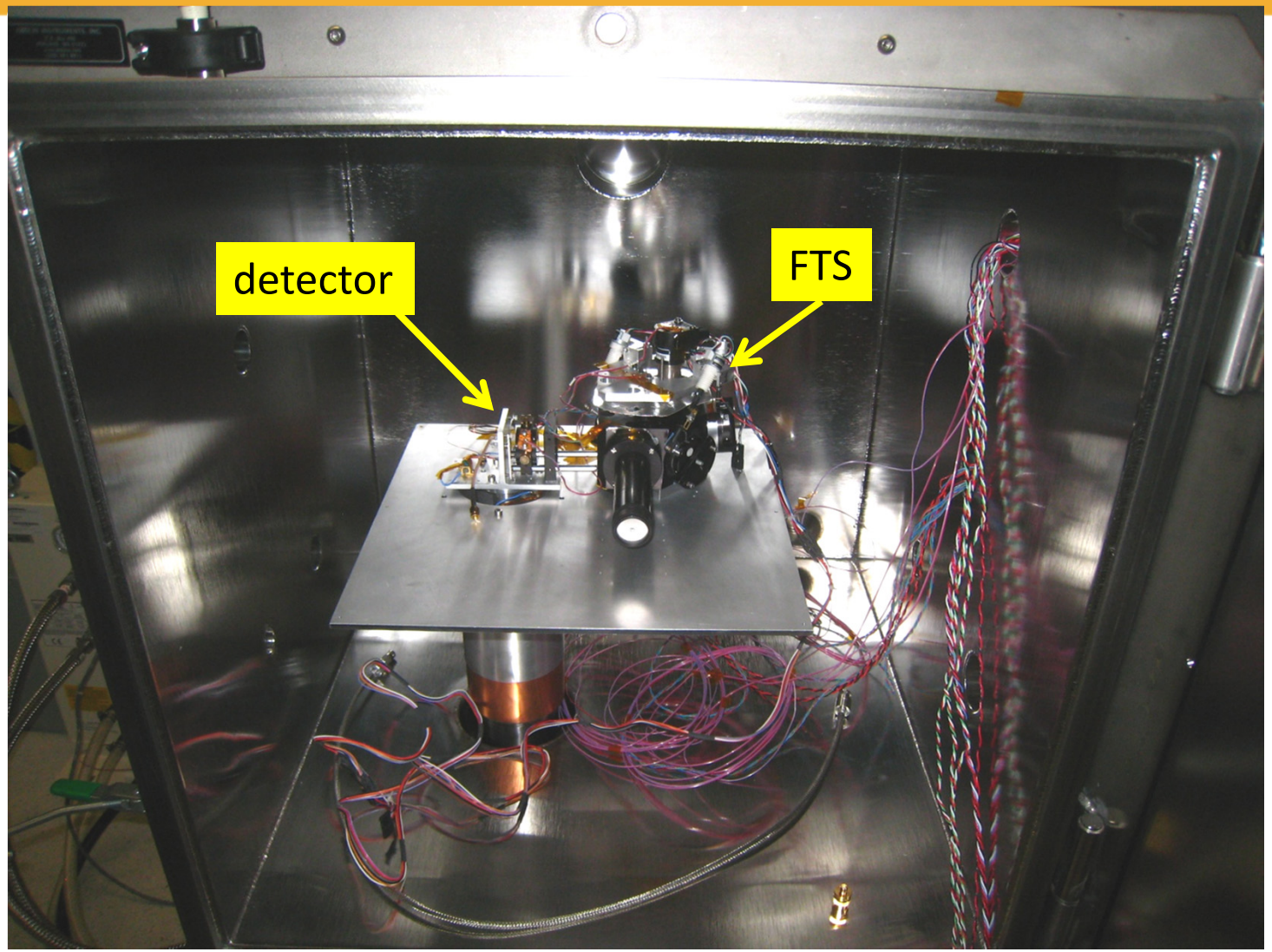

Inside the chamber

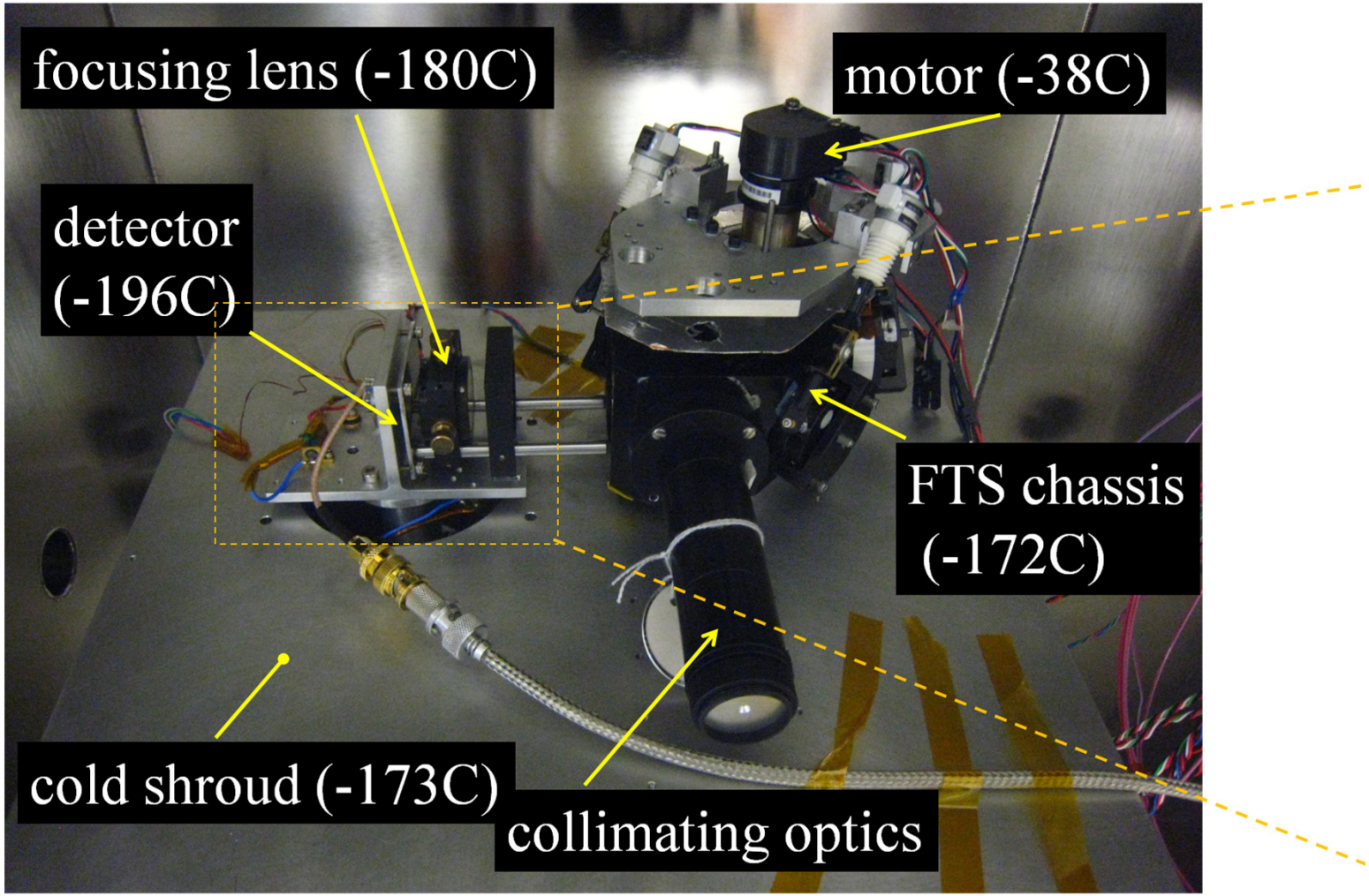

Detector area

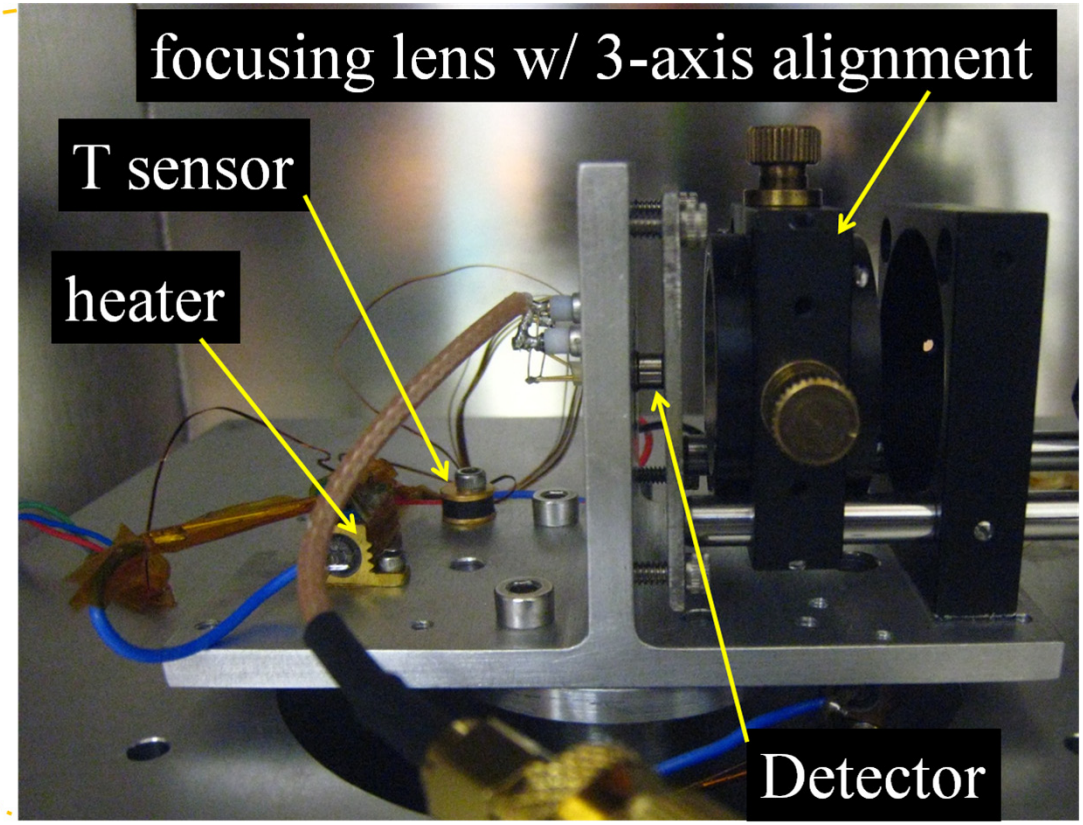

Miniature chamber

- Tactical cryocooler
- Rapid detector/ electronics testing and evaluation

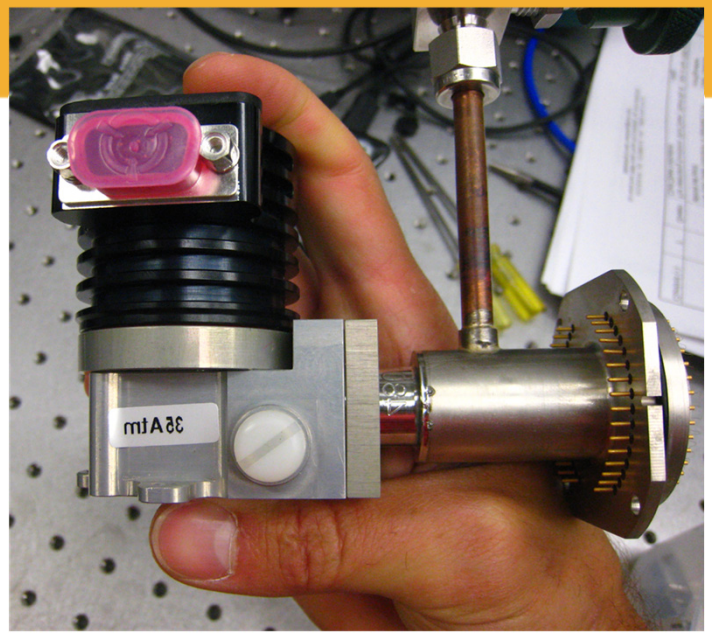

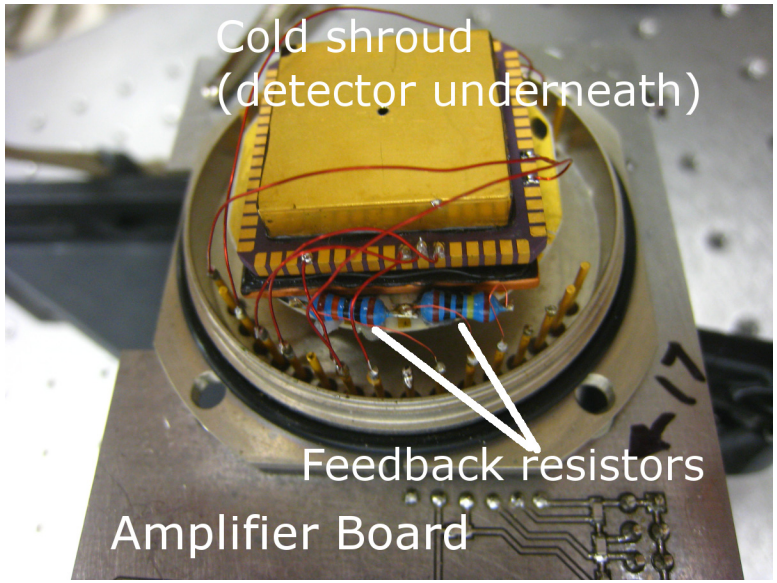

Thermal Performance

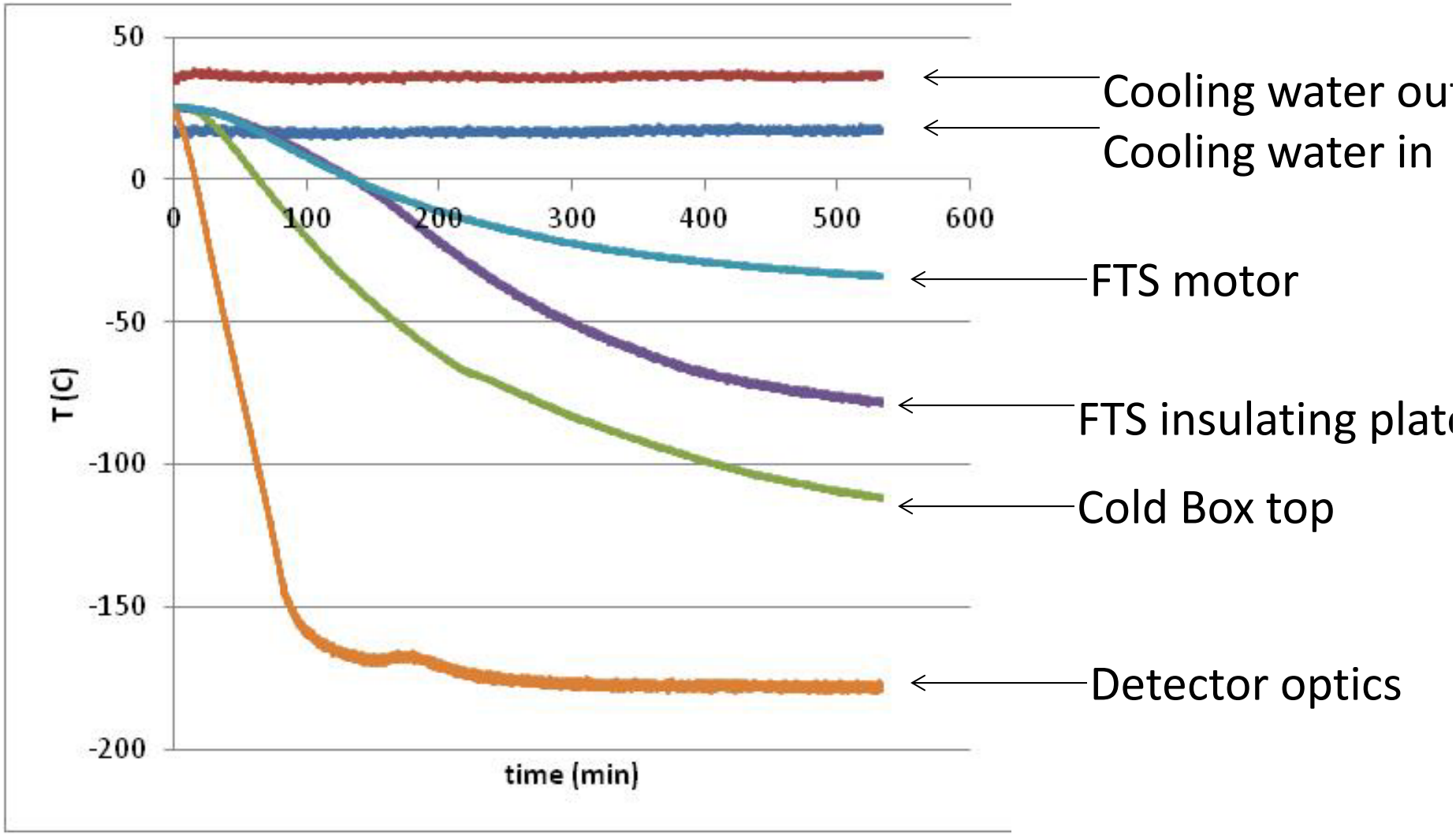

Component Temperatures During Operation

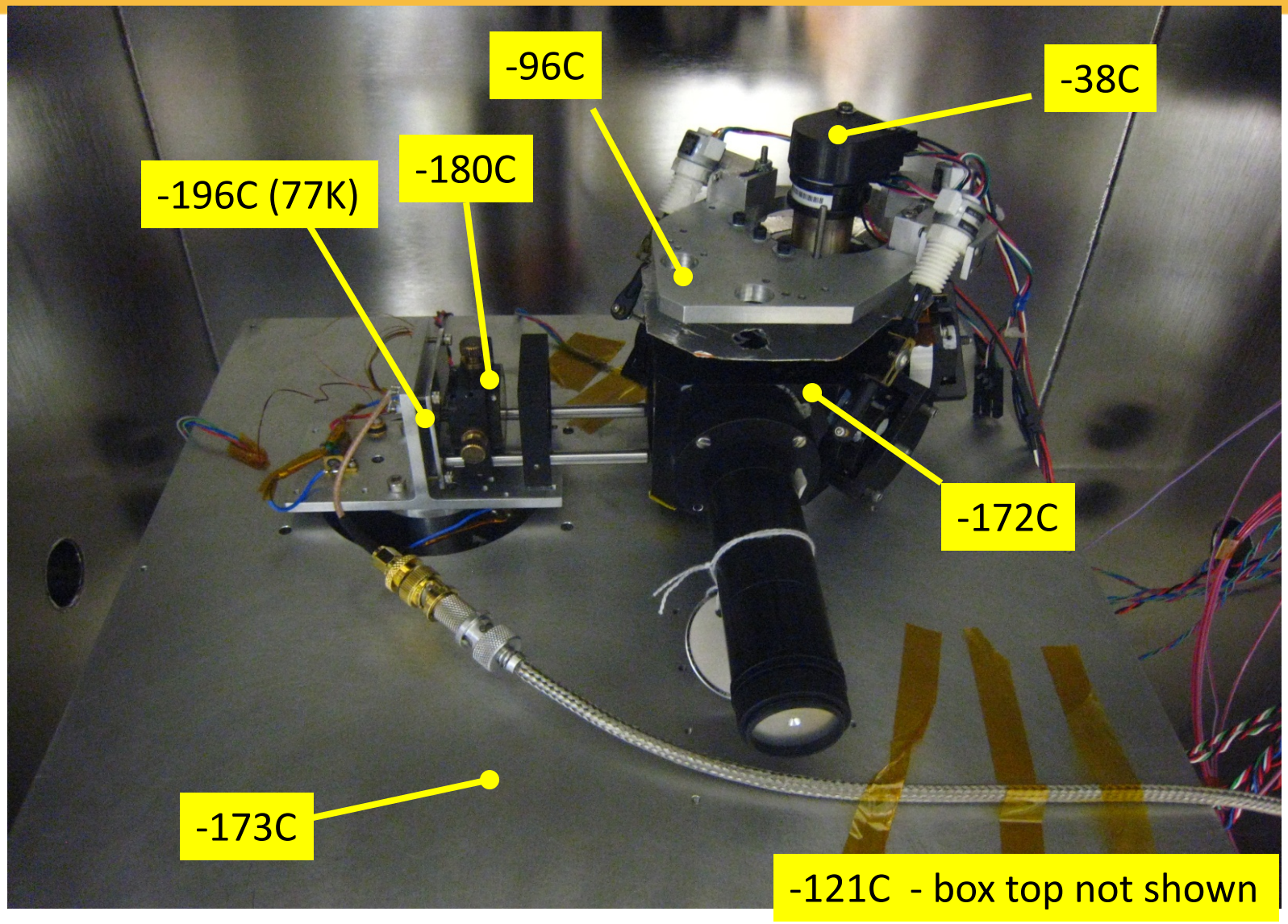

Amplifier circuitry

- Two architectures tested: resistive and capacitive TIA

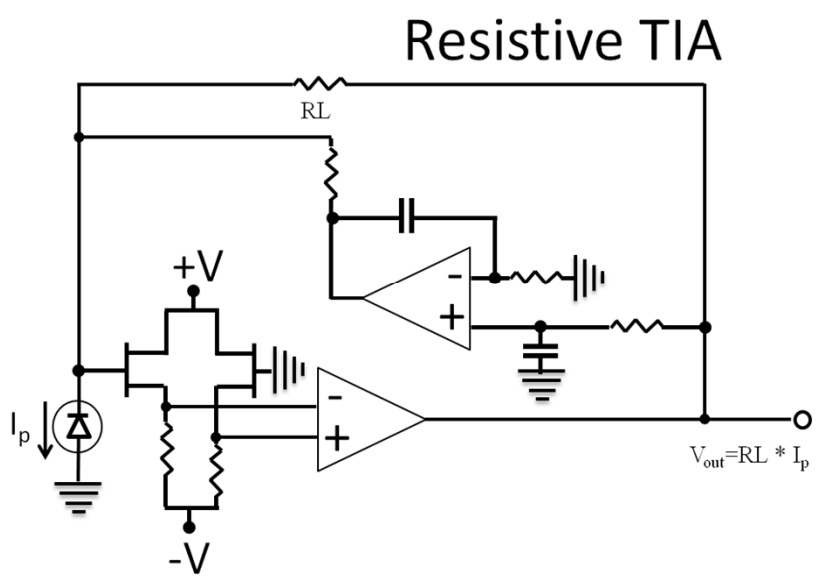

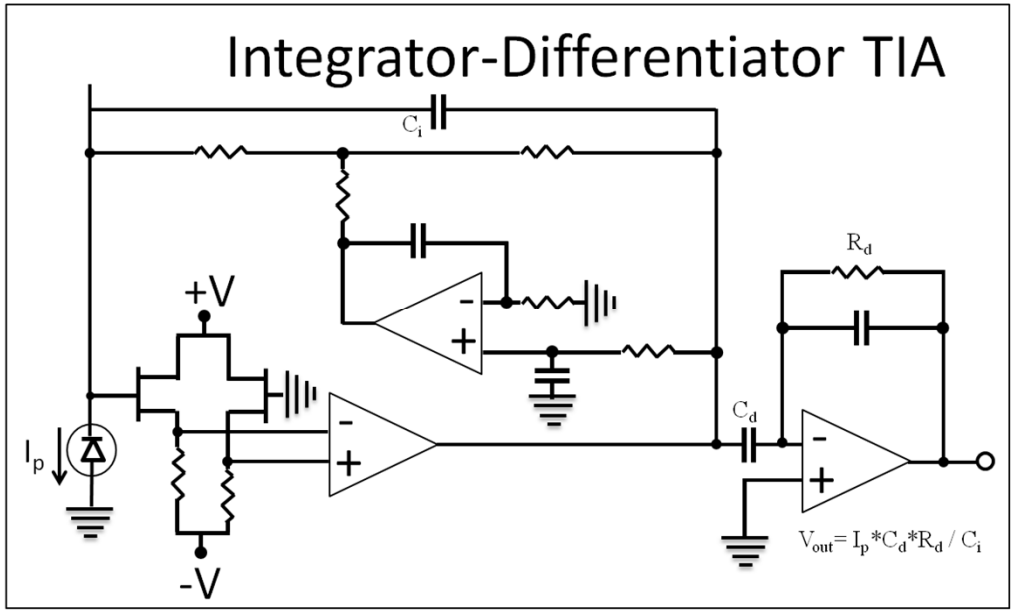

Raw interferogram

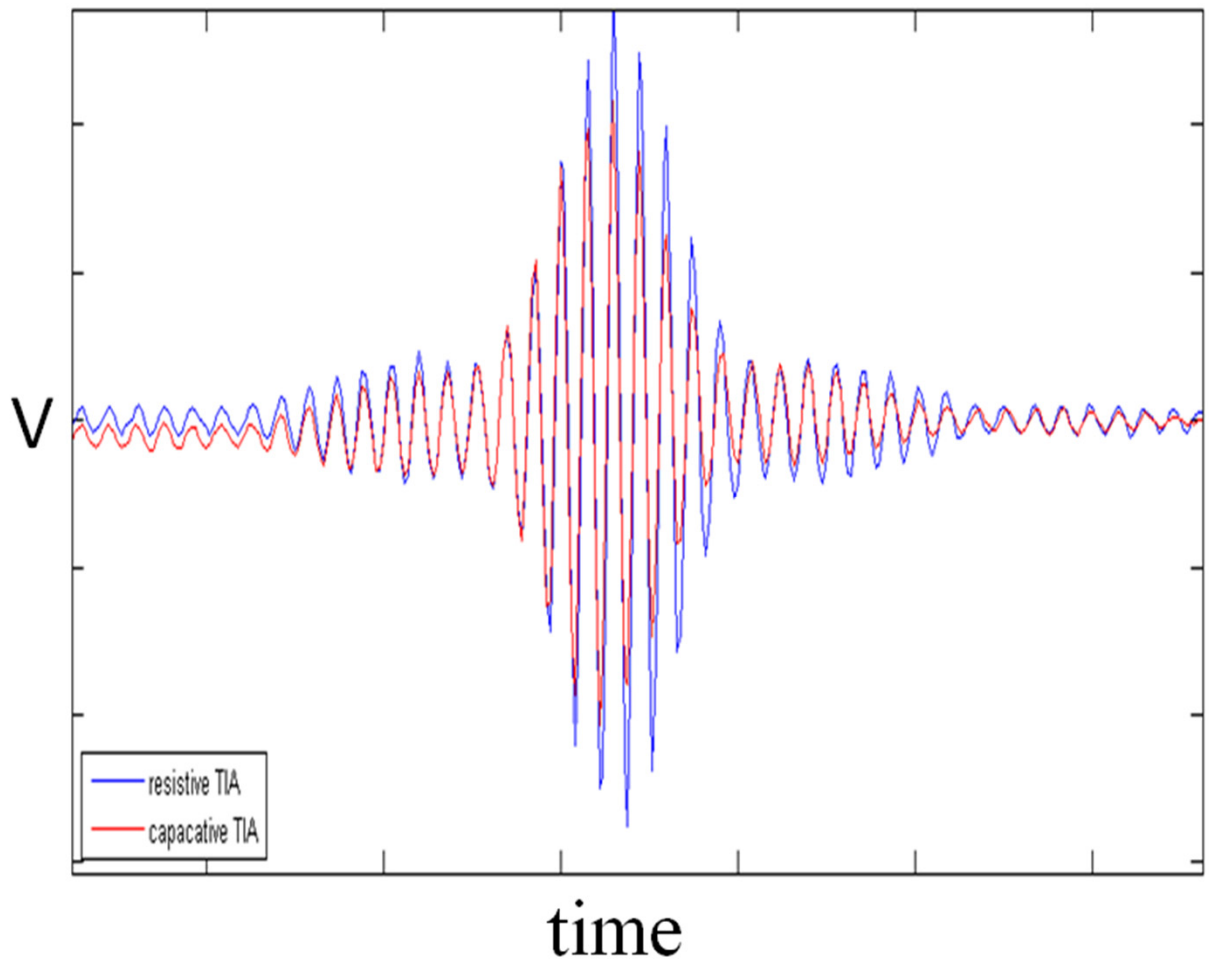

Spectrum

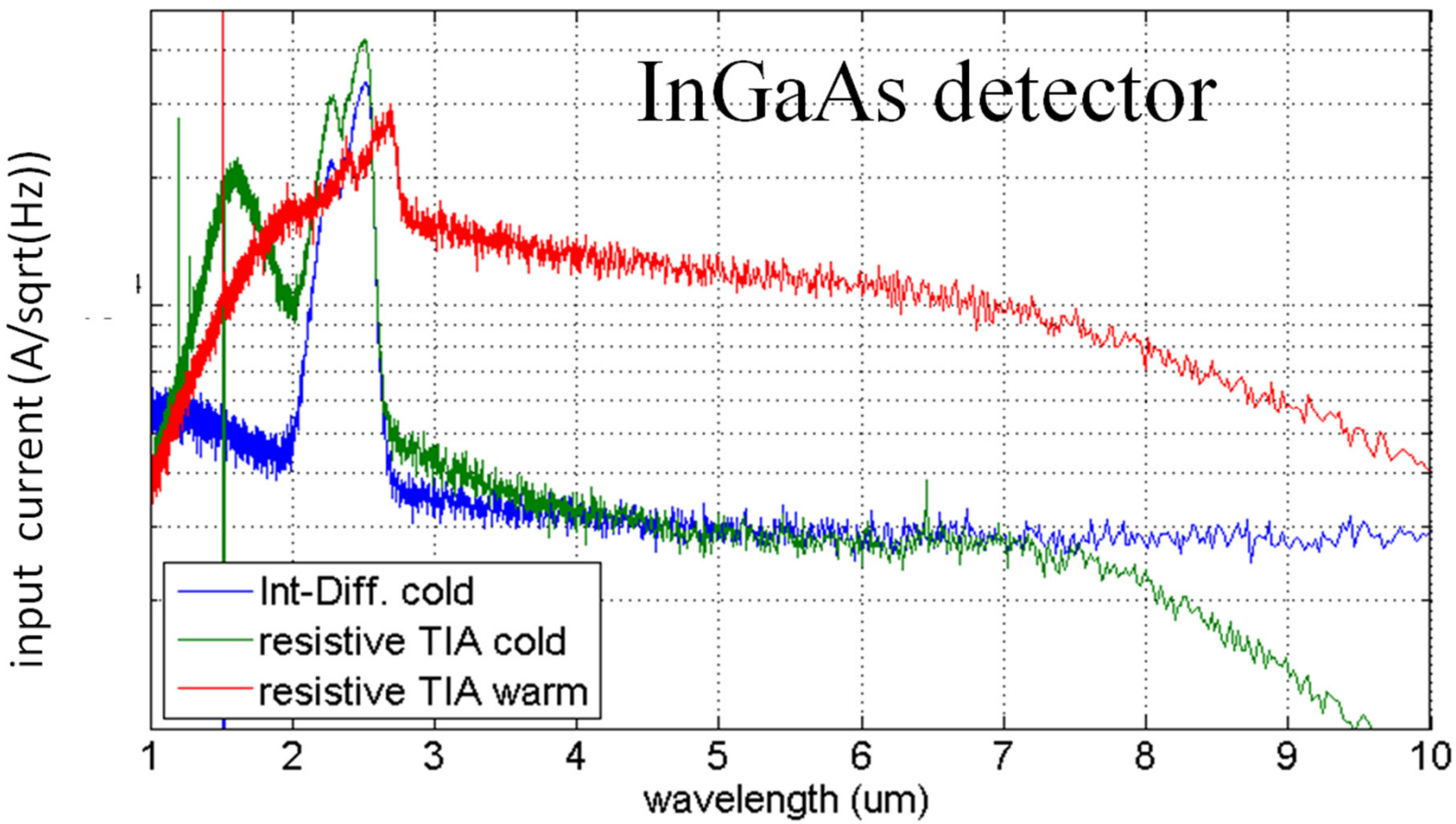
InGaAs detector
input current (A/sqrt(Hz))
wavelength (um)
1
2
3
4
5
6
7
8
9
10
Int-Diff. cold
resistive TIA cold
resistive TIA warm

AIAA

The World's Forum for Aerospace Leadership