Jet Propulsion Laboratory
California Institute of Technology

The Geostationary Fourier Transform Spectrometer

Richard Key, Stanley Sander, Annmarie Eldering, Charles Miller, Christian Frankenberg, Vijay Natraj, David Rider, Jean-François Blavier, Dmitriy Bekker, **Yen-Hung Wu**

IEEE Aerospace Conference
Big Sky, MT

March 7, 2012

Carbon Cycle Observation

- Carbon exchanges between carbon reservoirs form the carbon cycle
- Spatial and temporal gradients in atmospheric CO2 and CH4 may be inverted to estimate fluxes
  - Flux inversion has large uncertainties, since applied to under-measured systems
  - Typically conducted for single species, lacking information to disentangle signals from natural/anthropogenic processes
  - Local signals are immediately transported by weather systems

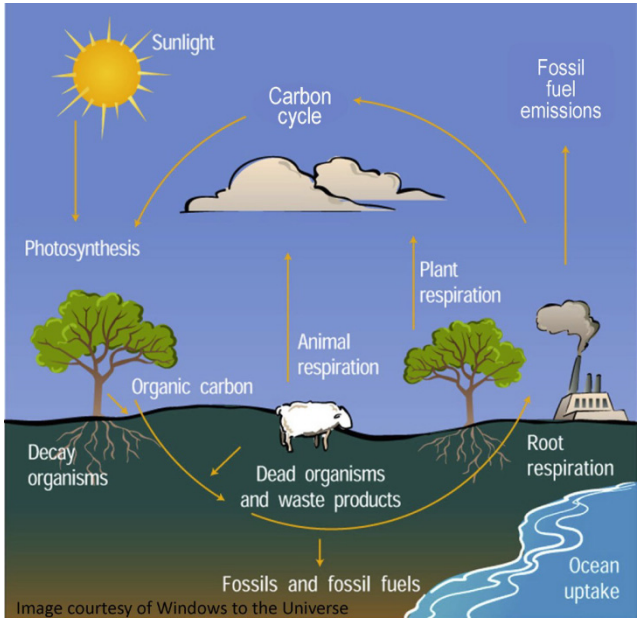

- Challenge for better understanding of the carbon cycle is twofold:
  - Increase spatial and temporal density of measurements to better fit into models used in inversion framework
  - Measure key variables that will enable models to disentangle fluxes from natural and anthropogenic processes

Hosted Payload Con. Op.

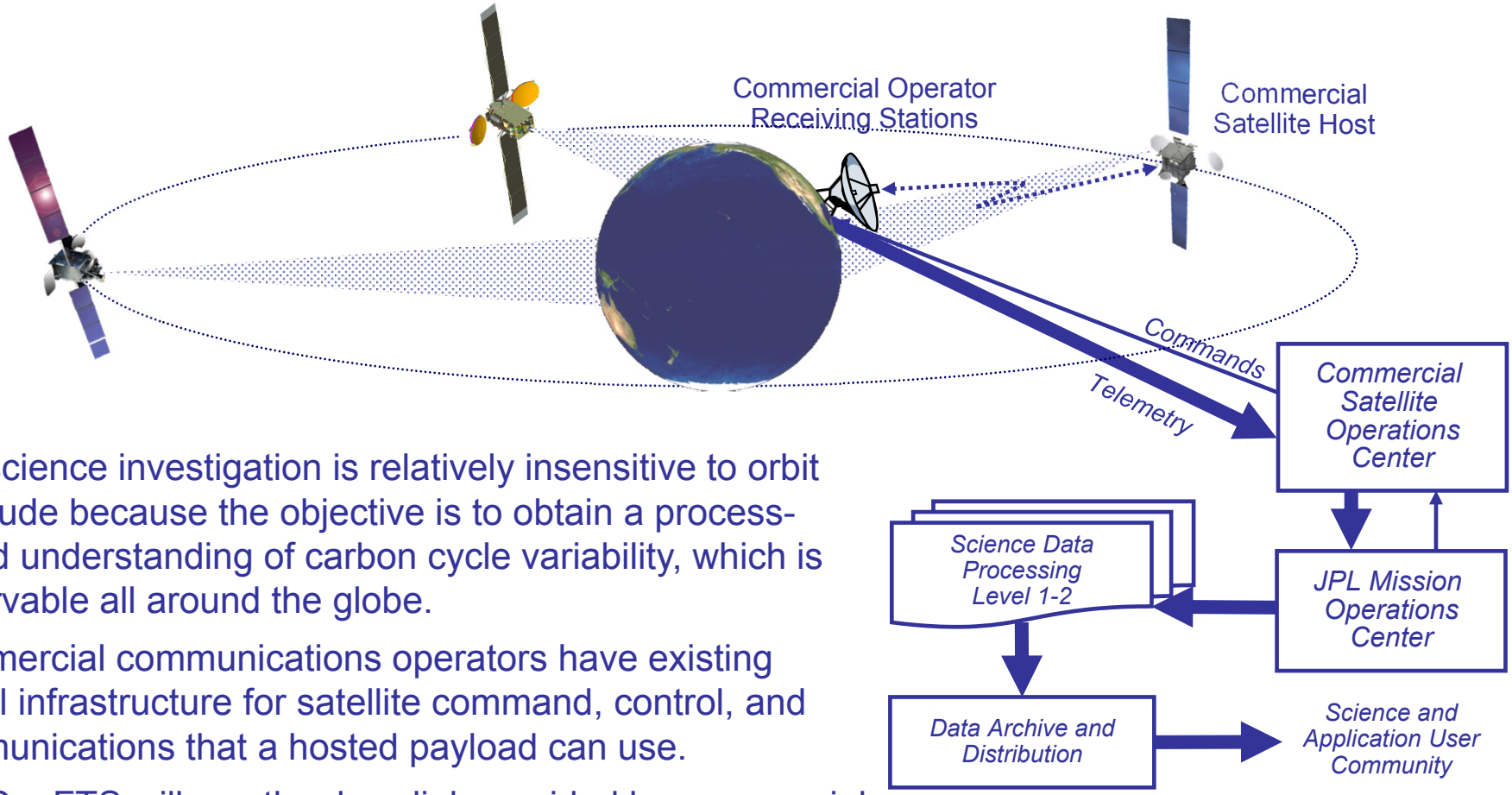

- The science investigation is relatively insensitive to orbit longitude because the objective is to obtain a process-based understanding of carbon cycle variability, which is observable all around the globe.
- Commercial communications operators have existing global infrastructure for satellite command, control, and communications that a hosted payload can use.
- The GeoFTS will use the downlink provided by commercial satellite operator to their ground station. Continuous direct data transfer from instrument to satellite transponders.
- The GeoFTS data will be delivered to the JPL mission operations center.

Geo. Orbit Observing Scenario

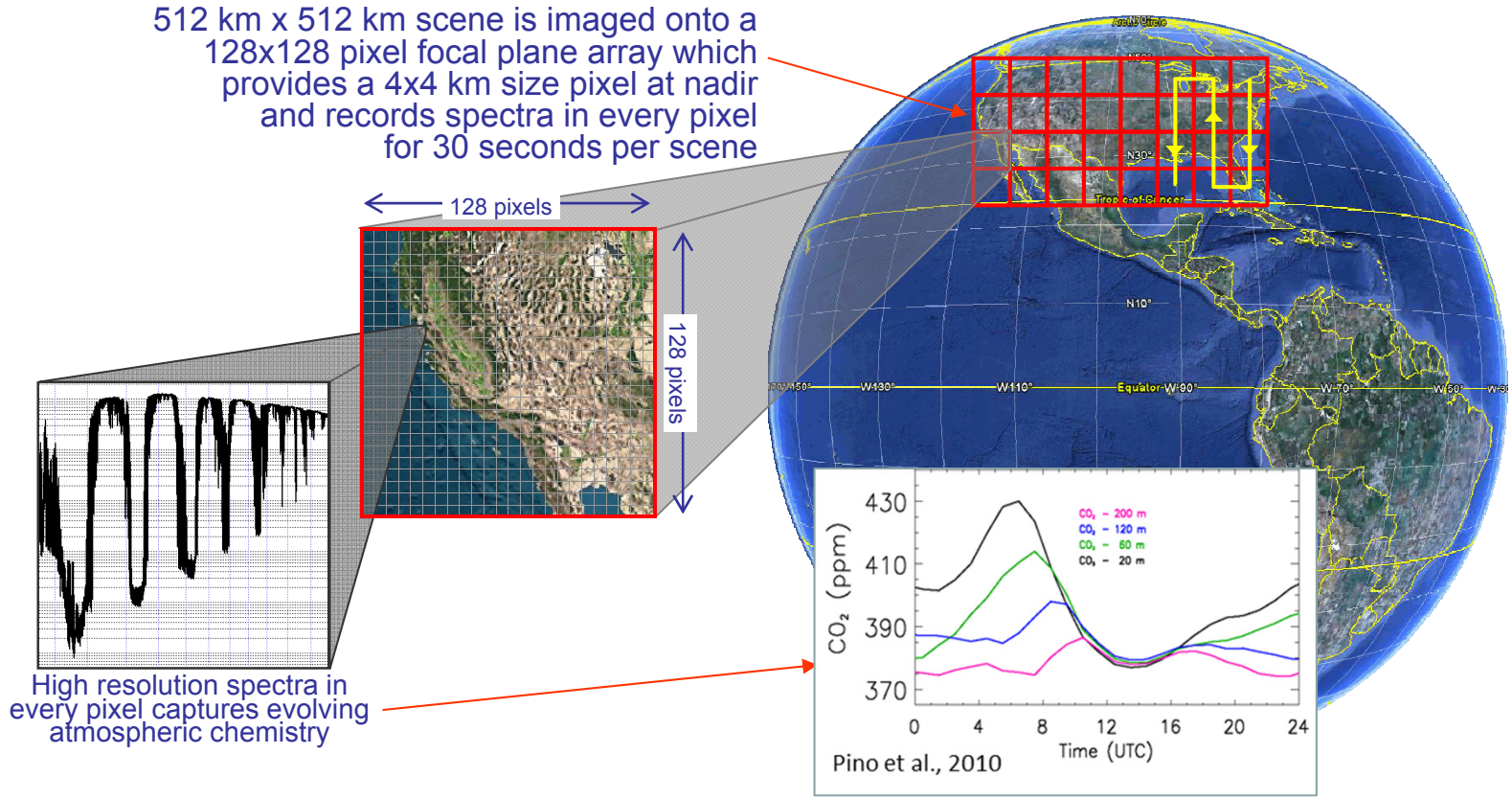

- The GeoFTS is an imaging spectrometer which acquires a spectrally-resolved image of a scene by holding the line-of-sight fixed on the scene for the period of time needed to record interferograms of the scene.
- A square pixel array maps the scene with spatial sampling defined by the optical system design.
- A continental U.S. observation campaign would consist of 32 scenes observed one at a time in a boustrophedonic (“as the ox plows”) pattern. If each scene is observed for 30 seconds coverage of the continental U.S. can be completed in about 16 minutes.

Jet Propulsion Laboratory
California Institute of Technology

GeoFTS Instrument Concept

Breadboard

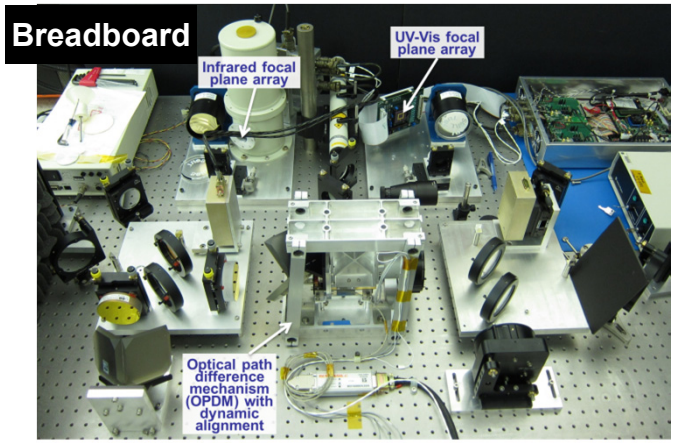

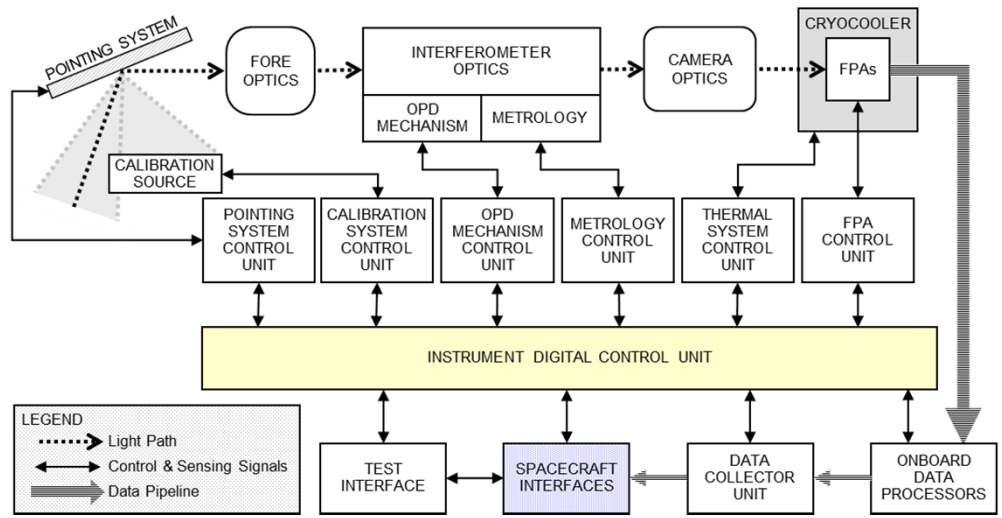

Flight Design

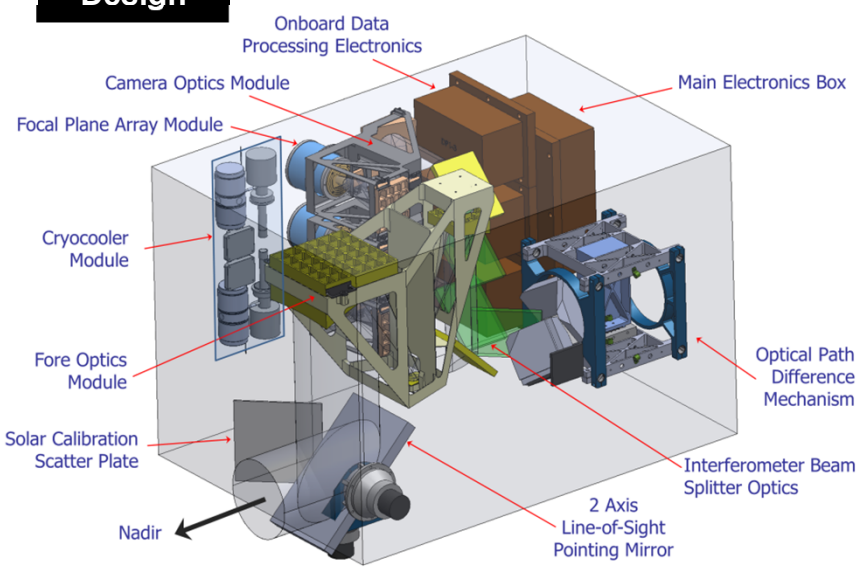

Instrument Characteristics	
CBE Mass	98 kg
Peak power	113 W
Size (LxWxH)	0.8 x 0.5 x 0.6 m
Max data rate	185 Mbps
Line-of-sight pointing control	2.13 arcsec
Line-of-sight pointing stability	2.0 arcsec/sec
Spatial resolution	4x4 km @ nadir
Spectral resolution	< 0.3 cm^{-1}
Calibration	Solar, daily
TRL	6

Optical Subsystems

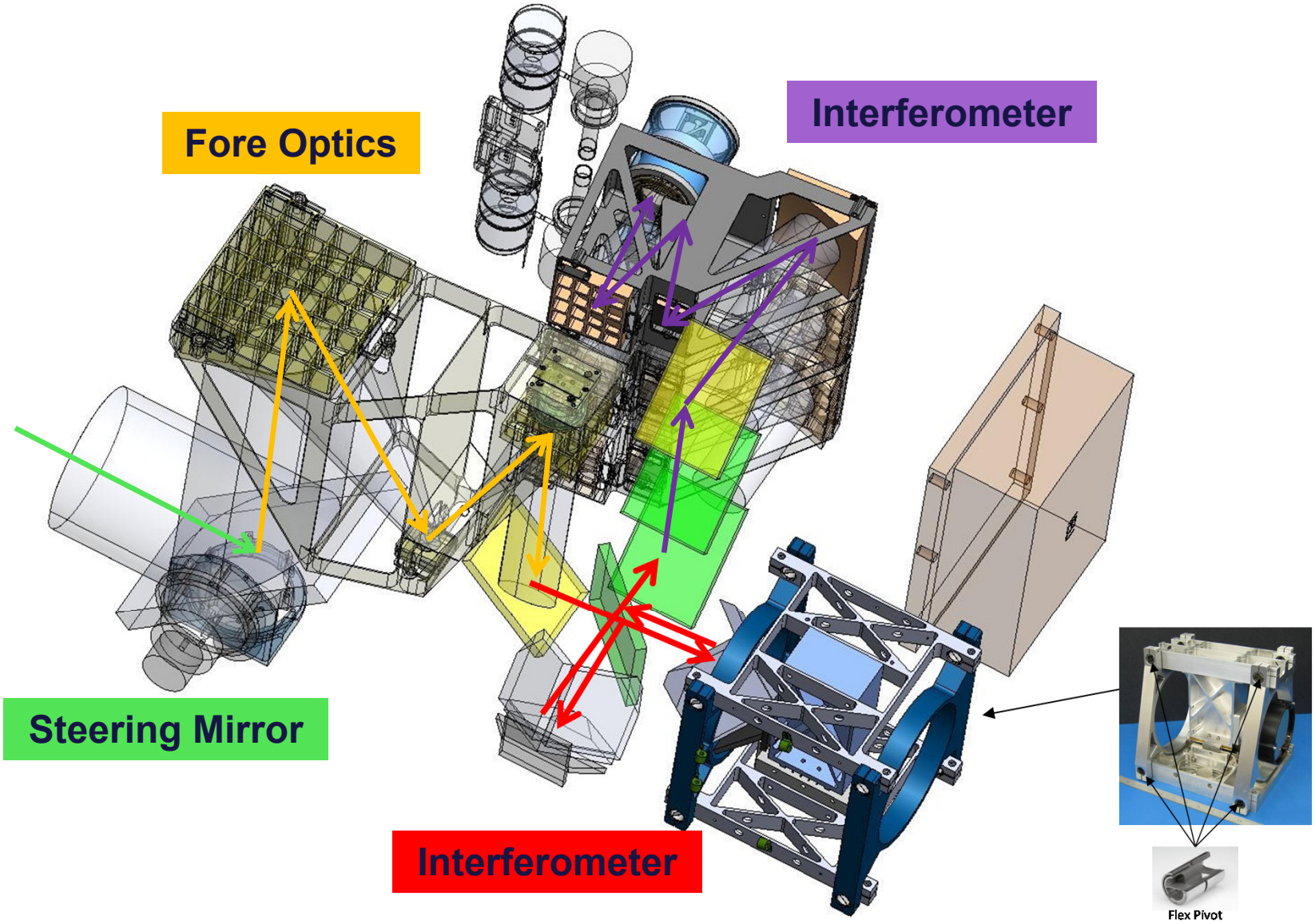

Focal Plane Array Design

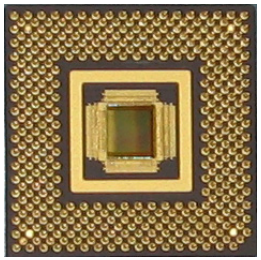

128x128, 60 µm pixel ROIC

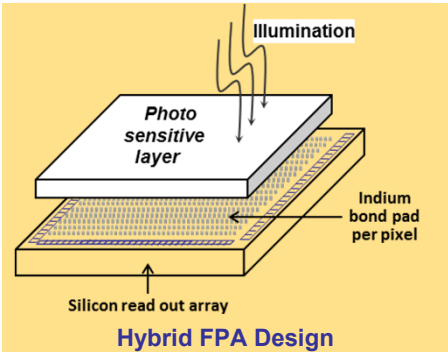

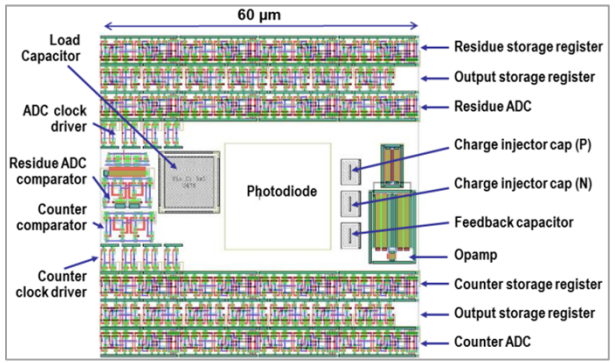

Single pixel ADC circuit layout

- All three FPAs will be digital output focal plane arrays
  - ESTO funded JPL to developed an all digital Read Out Integrated Circuit (ROIC) with a separate ADC built into every pixel
  - ESTO is funding JPL to demonstrate the in space performance of the ROIC hybridized with SiPIN (GRIFEX)
  - ROICs are 128x128, 60 µm pixel arrays with 14 bit digital output from each pixel eliminating the need for off-chip signal processing electronics which substantially reduces FPA signal chain complexity, volume, mass, power, implementation risk and cost
  - Proven design, with capabilities tailored for GeoFTS requirements
  - Cooling required to reduce dark current / meet noise requirements
- Major components
  - In-Pixel ADC ROICs
  - Photosensitive diode arrays
    - HgCdTe for SWIR
    - SiPIN for NIR
- Heritage and TRL
  - The ROIC array was successfully operated in the Fourier Transform Ultraviolet Spectrometer and measured atmospheric composition over a period of several days; TRL 5.
  - The GRIFEX mission will advance the ROIC/FPA to TRL 7.

Data Table Mountain Obs.

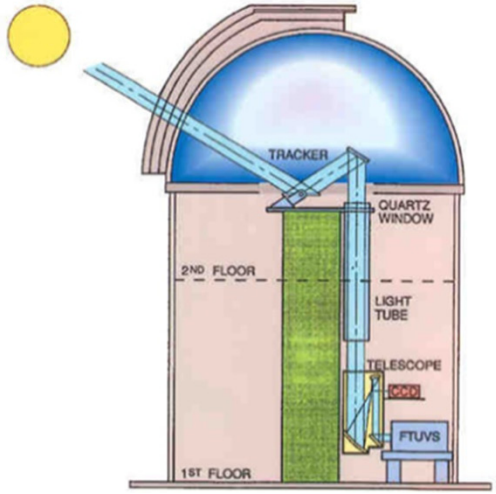

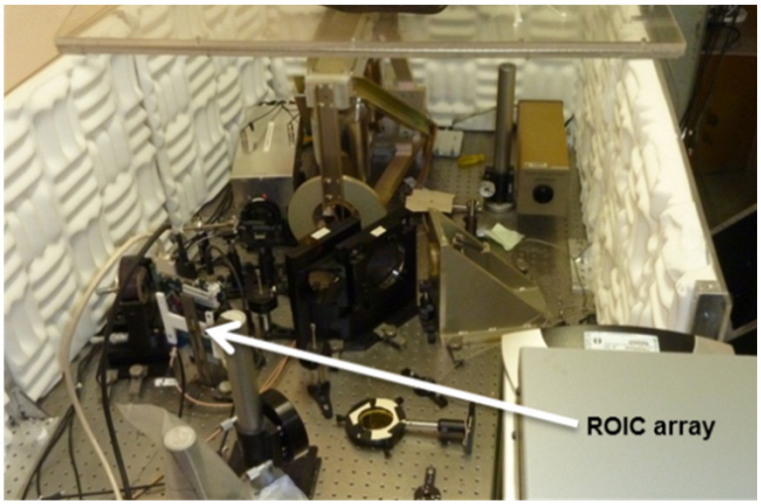

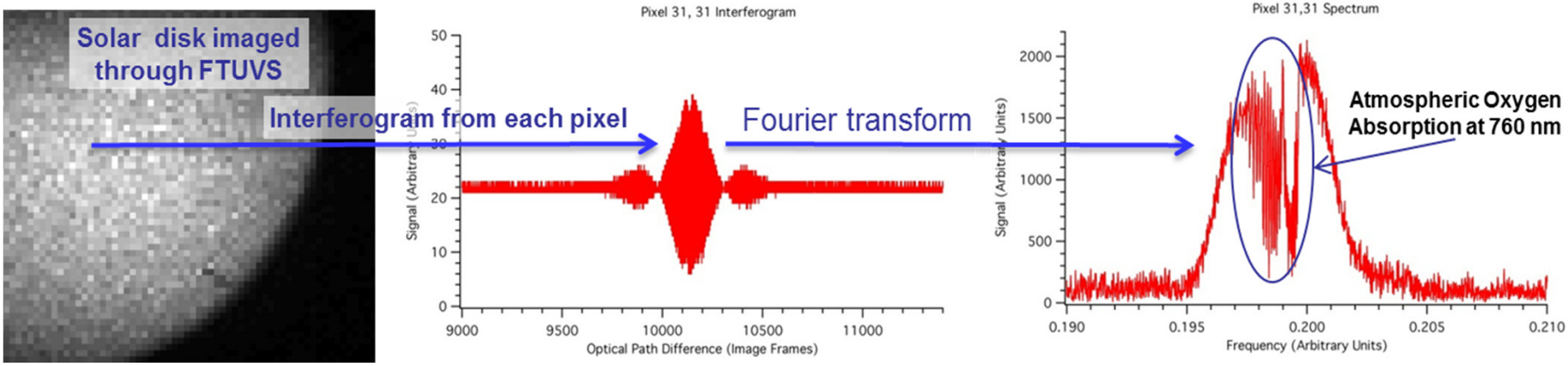

Demonstrated end-to-end key hardware and data products.

Summary

- Key components of GeoFTS (interferometer mechanism and ROIC with in-pixel ADC) have been demonstrated.
- Funding and tests are in place to raise the Technology Readiness Level of these key components.
- Demonstrated end-to-end breadboard instrument; photons in, spectra out.

Acknowledgement

The research described in this presentation was carried out at the Jet Propulsion Laboratory, California Institute of Technology, under contract with the National Aeronautics and Space Administration

© 2012 California Institute of Technology. Government sponsorship acknowledged.