ATHLETE: A Mobility and Manipulation System for the Moon

Brian H. Wilcox
Jet Propulsion Laboratory, California Institute of Technology
4800 Oak Grove Drive
Pasadena, CA 91109
818-354-4625
brian.h.wilcox@jpl.nasa.gov

Abstract — A robotic vehicle called ATHLETE – the All-Terrain Hex-Limbed, Extra-Terrestrial Explorer is described, along with initial results of field tests of two prototype vehicles. [1] [2] This vehicle concept is capable of efficient rolling mobility on moderate terrain and walking mobility on extreme terrain. Each limb has a quick-disconnect tool adapter so that it can perform general-purpose handling, assembly, maintenance, and servicing tasks using any or all of the limbs.

TABLE OF CONTENTS

1. INTRODUCTION 1
2. BACKGROUND AND OVERVIEW 2
3. OBJECTIVES 5
4. APPROACH AND METHODOLOGY 5
5. SUMMARY AND CONCLUSIONS 8
6. ACKNOWLEDGEMENTS 9
7. REFERENCES 9
8. BIOGRAPHY 10

1. INTRODUCTION

The Jet Propulsion Laboratory, together with NASA Johnson Space Center, NASA Ames Research Center, Stanford University, and Boeing Company have developed "Software Development Models" (SDMs) of a lunar utility vehicle capable of high mobility on Rough and Steep Lunar Terrain. We call this vehicle ATHLETE: the All-Terrain Hex-Limbed Extra-Terrestrial Explorer. The ATHLETE vehicle (Fig.1) concept responded to the call for Intelligent and Agile Surface Mobility Systems identified as part of the Lunar and Planetary Surface Operations element of the NASA Technology Maturation Program as needed for a sustainable, affordable, and safe Human Lunar Return. This system is capable of moving rapidly and efficiently over rolling terrain at speeds of at least 10 km/h, more than 100 times faster than the Mars Exploration Rovers (MER). It is capable of moving over extremely rough or steep terrain beyond the capability of any fielded vehicle. ATHLETE uses wheels on legs (along with possible rappelling on a tether) to accommodate this wide range of [3]terrain. The vehicle uses wheels to roll over smooth terrain, but unlike MER or other fielded robotic vehicles, it can use the wheels as feet on the end of legs to achieve unprecedented mobility. One unique advantage of the wheel-on-leg ATHLETE concept is that it combines the high mobility of legged vehicles with the energy efficiency of wheeled vehicles. A second unique advantage of ATHLETE is that each of the limbs can be equipped with a quick-disconnect tool adapter so that tools or general-purpose manipulators can be affixed to the ends of the limbs.

The ATHLETE system addresses a large number of the capabilities that have been identified as important in prior NASA studies. Clearly multiple ATHLETE vehicles as

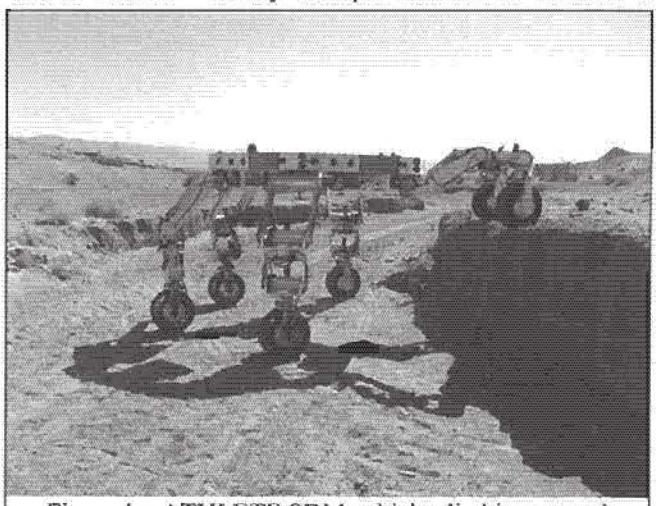

Figure 1a: ATHLETE SDM vehicle climbing natural escarpment.

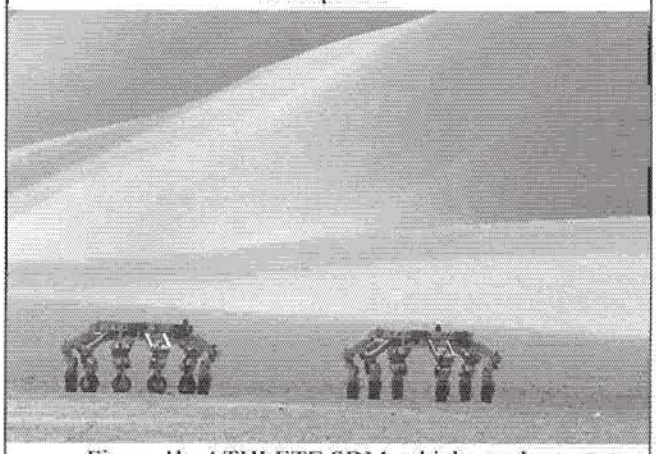

Figure 1b: ATHLETE SDM vehicles under test at Dumont Dunes in California.

1——————————————

[1] 1-4244-0525-4/07/$20.00 ©2007 IEEE.
[2] IEEEAC paper #1294, Version 5, Updated December 8, 2006

shown in Fig 1 comprise a robotic network that is highly modular and reusable, providing substantial margins, redundancy, and reconfigurability. The large margins and redundancy enhance human safety because significant failures can occur and still the system can return to base. The all-terrain (and even self-righting) mobility performance of ATHLETE provide robust access to surface targets, and makes it possible to pre-position logistics from disparate landing sites or to bring in-situ resources within useful reach of a base. The ATHLETE control approach incorporates autonomy into an effective system controllable by human operators who visualize the work site using data-rich virtual presence. Because Earth gravity is 6 times lunar gravity, the breadboard vehicles built in this project were half-scale, for Earth testing, using similar-performance leg actuators to those planned for use on the moon. The Earth test SDM vehicles shown in Figure 1 are 850 kg each, 2.75 m diameter, and were built from commercial-grade components that have analogs that can be flight qualified for the lunar environment.

Brian Wilcox is the Principal Investigator for ATHLETE, and led the team of Co-Investigators: Rob Ambrose of the NASA Johnson Space Center, Jean-Claude Latombe of Stanford University, Illah Nourbakhsh of NASA Ames Research Center and Carnegie-Mellon University, and Mark Henley of Boeing.

2. Background and Overview

Previous missions to the moon went to mostly flat terrain where landing would be safe. However, orbiter images show many places on the moon that are mountainous, or that have crater ejecta or other dense hazard fields. The polar regions are largely unknown and unmapped, and yet are attractive sites for future exploration and exploitation. Missions to any of these locales will require a combination of very efficient mobility on relatively flat terrain and very high mobility on very challenging terrain. A challenge identified in the Lunar and Planetary Surface Operations element of the Human & Robotic Technology (H&RT) Formulation Plan and the Intramural Call for Proposals (ICP) was to develop "Intelligent and Agile Surface Mobility Systems, both piloted and unpiloted." This project

Fig 3: Prior Wheel-on-Leg Vehicle with six wheels in symmetric hexagonal array, able to climb steps 50% of max stowed vehicle dimension.

Figure 2: GoFor (1992) - High mobility robot vehicle developed by this author with wheel-on-legs configuration, able to climb vertical steps of height 70% of the maximum stowed vehicle dimension.

addresses that challenge with the ATHLETE vehicle concept. This author has built previous wheel-on-leg high-mobility robots since 1992 (Figures 2 and 3, among others)[1]. These vehicles are able to climb over vertical steps with a height of 50% to 70% of the stowed length of the vehicle, about twice that of the Mars Exploration Rover. The main advantage of the wheel-on-leg configuration for high mobility is that, unlike a conventional vehicle, it does not require thrust from some wheels to generate the traction needed by other wheels to climb obstacles. Instead, each wheel can be lifted by its leg and set on or over an obstacle, like a foot. In very severe terrain, they can just walk like a legged vehicle. But unlike a purely legged vehicle, a wheel-on-leg vehicle is able to roll efficiently and quickly on relatively flat terrain, using much less energy (about a factor of four) than a typical walking robot. Thus it combines the advantages of wheels and legs.

The terrestrial ATHLETE vehicle testbed built under this project uses commercial-grade actuators and electronics but is the functional equivalent of the lunar flight system. This terrestrial vehicle is approximately half-scale compared to the lunar flight system (2.75 m diameter instead of 5.5-7.5 m diameter, as limited by the launch shroud of the lunar cargo lander). The structural mass of the half-scale vehicle is about half that of the lunar vehicle, since each link is about the same cross-section to handle the torque of the same actuators, but each is only half as long. By virtue of this scaling, the 1100 kg fully-loaded terrestrial vehicle delivers the same effective force-to-weight ratio as the flight system will have on the moon at 3300 kg (including over 2000 kg payload plus fuel supply sufficient for several days). Of course different vehicle sizes and payloads can be configured using actuators whose performance differs from those used in the initial ATHLETE breadboard. For example, it may be desirable to configure a 5-8 meter vehicle that has a payload of ten or tens of tons, so as to match the capabilities of the lunar cargo lander. This would

merely require scaling the actuators to a somewhat larger size.

The major subsystems of ATHLETE are:
1. Six Wheel-on-Leg assemblies which include distributed sensing, computation, and control electronics,
2. A hexagonal frame,
3. Docking adapters on each side of the hexagon, and
4. A power generation and storage system.

Each of these subsystems will now be briefly described.

1. The Wheel-on-Leg assembly is the key subsystem that gives the vehicle high mobility performance and flexibility. The kinematics allows the vehicle to plant the wheels in a fixed position and attitude as "feet" when in walking mode, or to roll in any of a wide variety of stances to give the desired ground clearance or weight distribution, or to manipulate payloads, operate upside-down, self-right, and stow and self-deploy from a very compact form.

Each wheel drive actuator needs a very powerful motor to sustain the 10-km/hr speed required for acceptable real-time collaboration with astronauts. Each wheel of the ATHLETE breadboard vehicles is equipped with a ~1.9 horsepower motor, delivering 1755 N peak rim thrust (527 N continuous) at 10 km/h rim speed. Extremely low ground pressure is not required, since the vehicle can "walk" out of situations where one or more wheels begin to sink more than a few tenths of a wheel diameter. For example, in the spring of 2005 the Mars rover "Opportunity" got stuck for many weeks in a soft dune. In that situation, ATHLETE would just walk out. Lunar regolith was reasonably well-characterized during past human and robotic missions to the moon – it has been found to be relatively good from a load-bearing point-of-view. So long as the ground pressure of each wheel is limited to about 35 kPa, the vehicle should have acceptable sinkage (a few centimeters) and acceptable rolling resistance over the vast majority of the lunar surface (e.g. the "2-sigma" situations). These same considerations allow the total rim thrust of the wheels to be matched to the typical cruising conditions, and not to be sized for the absolute worst-case conditions (e.g. "3-or-4-sigma"). If the "drawbar pull" required to roll the vehicle forward exceeds the combined rim thrust of the wheels, then the vehicle will switch to walking mode. The brakes on each wheel are sized for the worst case thrust loads, however (as they are on the Earth testbed breadboards).

An initial and perhaps obvious question that must be answered is "is ATHLETE too complex or too heavy to be practical for use on the moon?" The low gravity on the moon is a crucial factor in answering this question. Scaling based on the performance of flight actuators such as used on MER (500 Nm of torque per kg of actuator), a set of six ATHLETE legs can be configured that are only about 5% of the mobile mass. Because each wheel and wheel-drive assembly only has to work well on "2-sigma" terrain, it can be much smaller and lighter than the wheel and wheel drive that would be needed for "3-or-4-sigma" terrain. Again using the performance of we find that the mass savings on the wheel assemblies is about the same as the mass of the limbs, so that, in effect, the limbs add no additional mass beyond that of a mobility system such as used on Sojourner and MER.

Because each leg assembly has to be virtually a complete general-purpose manipulator in order to walk, we have designed a tool interface on each wheel fork so that it can attach and release tools, including general-purpose devices such as grippers. The tool adapter consists of a "square key" akin to that of a socket wrench that rotates with the wheel. A quick-disconnect allows tools to be latched onto the square key, so the latch provides a rigid attachment while the square key provides actuation power. This allows the ATHLETE vehicle to perform almost any assembly, maintenance, or servicing function. Note that the flight vehicle will be large enough that the gripper can reach up to 6-8 meters or more above the ground to perform work that human astronauts would find very difficult or dangerous (e.g on the side of a tall ascent vehicle or crane).

In principle the ATHLETE vehicle can operate in an inverted position, and thus tolerate a situation where it overturned. However, it seems unlikely that any payload would survive such an event, and so it is more important not to overturn in the first place. Like JPL's previous planetary explorers, the static stability will continuously be monitored to prevent overturning. At higher speeds dynamic stability will need to be evaluated as well. To date the team has not addressed this issue. On the slow end of the speed range, walking mobility in extreme terrain will be accomplished with a conservative one-leg-at-a-time gait, maintaining static stability on the remaining 5-sided polygon of support. Initially, we plan to maintain static stability over the conservative support polygon that is the intersection of all the 4-sided polygons that result from a wheel-terrain contact failure of any of the limbs. Thus the gait will be highly irregular, very conservative, and only used in exceptional circumstances, when rolling mobility cannot be used.. Approaches for the transition between wheeled and walking mobility have not been addressed.

Each leg and hex-frame side is equipped with multiple cameras so that human operators can control it effectively, and so that autonomous control is possible. On each face of the hex frame is a pair of stereo cameras (Fig. 5) that perform the same functions as the MER "navcams" and "hazcams" during driving operations. The ATHLETE navcams are used to look for hazards as the vehicle drives, and to provide panoramic stereoscopic HDTV imagery for the operator. Another pair of cameras is positioned on the tool interface to give close-up images of tool-workpiece or wheel-terrain interactions (e.g. sinkage, slippage, squirming, etc.). Budget limitations prevented all the cameras, tool interfaces, and docking adapters from being installed on all

positions of the SDM vehicles that have been developed. All camera systems in the flight system (and subsequent research) will be equipped with appropriate lighting (e.g. flashlamps synchronized with the camera shutters) to allow operations to be conducted in total darkness.

Distributed motor control is used on ATHLETE. This stems from the need to be architecturally-similar to future flight systems, which are expected to be based on a flight motor control module under developed at JPL that will survive the extreme thermal environment of planetary missions. By distributing the controllers out to each motor, only power and serial data busses need to be routed out the legs. This avoids the very heavy and complex wiring harness containing thousands of wires, of the type used on the Sojourner and MER rovers. The main problem with using centralized motor control is the extreme risk of intermittent failure in the complex wiring harness late in system integration before launch. If an intermittent fault is discovered late in the integration process, it is essentially infeasible to de-integrate a harness with thousands of wires from the vehicle, re-integrate a spare harness, and adequately validate full functionality in a short time. In the flight version, dual-redundant power and serial data buses interconnect the flight-like motor controllers, so that no single fault can disable the system. Each leg would have such redundant buses. Each "vision" processor board (one per leg/hex-face) takes input from the 4 cameras associated with each leg, and performs the "hazcam" function from MER on the stereo pair that looks out from each face. It can also perform stereo vision, feature extraction, or object recognition functions on the "toolcams" associated with the quick-disconnect tool adapter on each wheel yoke.

2. The hexagonal frame provides the attachment points for the leg assemblies. The batteries (and motor-generators or fuel cells for field operation) are mounted to this frame, as are the docking adaptors for each face of the hexagon. The electronics that controls ATHLETE are also mounted on the inside of the frame. In the flight system, the electronics will be packaged inside multilayer insulation and will use low thermal conductivity titanium mechanical supports that allow the battery/electronic module to stay warm at night or while in shadow with very little heating power (about 1 W).

3. The docking adapters make the vehicle very flexible and adaptable to novel uses. While a single vehicle can perform simple robotic missions, multiple vehicles can be docked together to perform long-range piloted or robotic exploration missions using appropriate payload modules. Because of the high degree of modularity and redundancy of this approach, it is hard to imagine a failure that would prevent return-to-base. A possible function of the docking adapter is also to mate larger tools to the vehicle, such as a launcher for grappling hooks. Each docking adapter could have a pair of large pin-in-socket electrical connectors so that bus power can flow as soon as mating is achieved. The docking adapters could be strong enough to act as launch restraints for the vehicle, so when they are released the vehicle can just stand up and walk off the lander with no extra deployment hardware or complexity.

4. The power system for the Earth testbed vehicles consists of three 120VAC 13A circuits. In the lab these are supplied by wallplugs and extension cords. In the field, three 2kW gasoline motor-generators are used. One of the 120VAC circuits supplies all the commercial computer and related equipment via conventional outlet strips. The other two 120VAC circuits operate current-limited power supplies that supply 12VDC, 24VDC, and 48VDC. In particular, the 48VDC power supplies charge a string of modern high-performance lead-acid batteries to supply power surges as possibly needed by the wheel or leg motors. The lunar flight vehicle is planned to use H_2/O_2 fuel cells and have solar arrays on the legs to regenerate the H_2/O_2 so that a vehicle that runs out of fuel is not permanently lost. The solar arrays would also permit laser power beaming into the dark lunar polar craters for vehicle recovery or even normal operations.

The on-board software (SW) development effort started with an implementation based on "lessons learned" from the MER flight software as applied to a multi-processor architecture. The SW development staff for ATHLETE consisted of former MER and Sojourner software developers who implemented both the on-board and ground control software for this project. MER, like Sojourner before it, is commanded using stereo waypoint designation, a technique invented and matured by this author in the early 1980s [2-4]. The operator controls the vehicle by visualizing the remote scene in stereo using a 3-D display, and maneuvering a cursor in this 3-D space to designate waypoints or activity sites. The vehicle can use the relatively advanced navigation and hazard detection and avoidance techniques of MER to ensure that the activities are completed faithfully and safely. This architecture lends itself to the building of "contingent sequences" of "macro" commands built out of primitives that the vehicle can perform reliably. In this way high levels of autonomy can be built up that the human operator understands and has confidence in. Further, the operator can always drop down to sending low-level commands of the sort "go there and there and then pick that up". Even such low-level commands will allow the vehicle system to be highly productive given the relatively short time delay in Earth-moon communications.

Algorithms for rappelling and cable management will be based on prior JPL experience with both untethered limbed robots and tethered wheeled robots on rugged and steep terrain [5-9]. Co-Investigator Professor Jean-Claude Latombe of Stanford University led the effort to develop algorithms for footfall placement of the wheels when walking on soft, steep slopes or on terrain that is too rugged to roll over [10-14]. Co-Investigator Dr. Rob Ambrose of

the Johnson Space Center led the effort to develop an astronaut interface that will allow a suited astronaut to issue voice and gesture commands to the vehicle, translating those commands into the same command strings that are generated by the ground control station, based on his team's extensive experience with human-astronaut interactions [15-17]. Co-Investigator Dr. Illah Nourbakhsh of NASA ARC (then on leave from Carnegie Mellon University) led an effort to develop a real-time retasking executive to sit on top of the current MER executive. Co-Investigator Mark Henley of Boeing led an effort to determine the manufacturing feasibility of the ATHLETE vehicles for short-run production as might be required to meet NASA's needs for near- and mid-term lunar exploration.

3. Objectives

The overall objectives of the originally-planned four-year project were to:

1. Develop and demonstrate the ATHLETE vehicle, showing power-efficient rolling mobility and walking on extreme terrain (e.g. climbing vertical steps that are a significant fraction of the vehicle stowed dimension).

2. Flight-qualify all technology components that are needed to ensure that aerospace industry will be able to produce this vehicle for NASA with affordable cost and schedule to support Human Lunar Return (HLR).

Only Phase I (Year 1) of this project was completed. During that time, we designed, built, and tested three terrestrial ATHLETE vehicles built using commercial-off-the-shelf components and demonstrated rolling mobility, walking mobility, docking, and use of the limbs as manipulators. The Project has subsequently been redirected by NASA Headquarters to be combined into an Inter-Center Project led by Chris Culbert of NASA Johnson Space Center.

4. Approach and Methodology

ATHLETE Mechanical Summary

The ATHLETE vehicle, shown in Figure 4, consists of six identical, six degree of freedom limbs. Attached to the end of each limb is a wheel which can be used for mobility in the form of driving over benign terrain. Alternatively, the wheels can be locked rotationally so that the limbs can be used for walking over rough terrain. The rover body is shaped as a hexagon, giving six flat faces that can be used to dock to similar ATHLETE vehicles. Each of these mechanical subsystems is discussed in the following sections.

The limbs of the ATHLETE vehicle consist of six degrees of freedom giving them the ability to be used as both structural links between the wheels and the frame as well as general

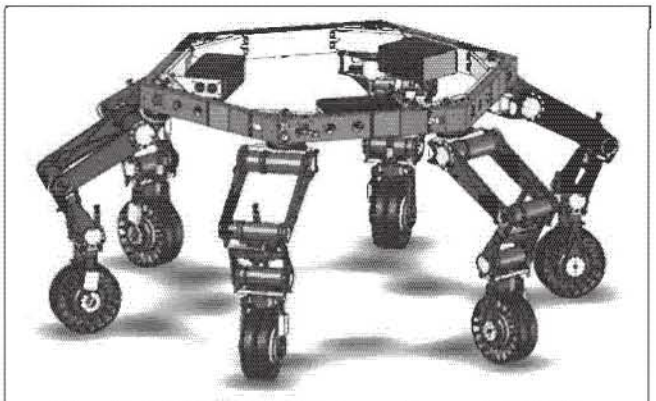

Fig. 4: ATHLETE rover shown in nominal driving configuration

purpose manipulators. These limbs can be used to pose the body while driving, walk as a secondary method of mobility, or interact with the vehicle's surroundings as manipulators. Each of the limbs are identical and are composed of the Hip Yaw, Hip Pitch, Knee Pitch, Knee Roll, Ankle Pitch, and Ankle Roll joints as illustrated in Figure 5 (with dimensions in meters). At the end of each limb is a powered wheel which is used either for driving or for actuating tools during manipulation tasks.

The main structure of the vehicle is a hexagonal ring with the hip joints attached at each of the six corners. The structure of the hexagon is welded aluminum c-channel with removable interior close-outs. This structural configuration provides a strong and stiff box section with an accessible interior where the cable harness can reside. The center of the hexagon is left open to provide access for the limbs to manipulate payloads on the top deck by moving the limbs through the center of the hex frame. Attached to two of the interior faces are battery housings. Attached to a third

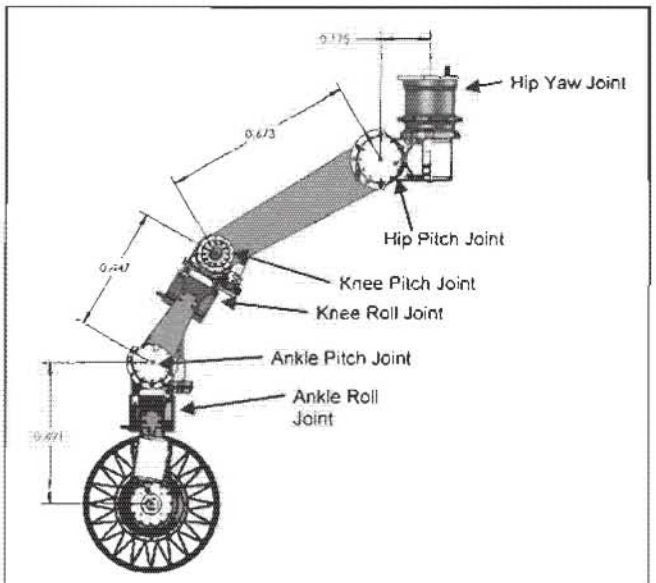

Fig. 5: ATHLETE limb (with dimensions in meters)

interior face is the main CPU for the vehicle. The flat exterior faces of the frame are used for docking of multiple vehicles together.

A key feature of the ATHLETE platform is its ability to dock with similar units as shown in Fig. 6. This system allows a large array of vehicles to be connected for tasks such as cooperative payload manipulation or the joining of multiple pressurized crew compartment payloads (making a mobile habitat called a "Habot"). Also, the docking interface can allow mating with a refueling station (e.g. for replenishing H2 and O2 used by a fuel cell), or to dock to ancillary equipment such as a "tool belt" or a rappelling winch.

Figure 6: Three ATHLETE vehicles docked together

The physical docking between the rovers is accomplished with an over-center mechanism in the face of each ATHLETE vehicle. As two vehicle approach each other, the latching mechanism on one side of the face aligns with the receptacle pin in the opposite side of the face in the mating robot as illustrated in Fig 10.

Once the vehicles are in close proximity, the hooks in both vehicles extend into the opposing receptacles. As the latches engage, they pull the two vehicles together. Mating cups and cones on the docking faces bring the vehicles into precise alignment as the latching mechanism draws the faces together. Due to the over-center design of the latch, torque is only required to drive the cam mechanism during latching and unlatching (Figures 11 and 12). Once the robots are docked, all loads are transferred from the hook directly into the structure, completely isolating the docking motor from the loads.

Due to the symmetry of the faces, any face of a given robot can mate to any face of another robot. The initial alignment of the faces can be done autonomously due to the stereo camera pair and colored target in each robot face. The targets are used to determine the relative positions of the two vehicles, and commands are generated to move them into alignment at a standoff location. A docking sequence is then initiated to bring the robots together. Note that once the vehicles are approximately posed for docking, only "self-motions" of the vehicle are required to achieve precision alignment of the frame elements. That is, no wheel-on-ground motion is required, but purely internal limb motions can maneuver the hex frame in 6-DOF to align it with the mating hex.

ATHLETE SDM Electronics

The ATHLETE Software Development Models are controlled by a commercial Central Processing Units (CPUs), selected based on their functional similarity (at low cost) to a triple-redundant PowerPC 750 Flight Processor that had been identified in the proposal phase as being suitable for the flight version of ATHLETE. These processors operate on a compact PCI bus using a commercial enclosure having a redundant power supply. An RS-422 serial interface is used to communicate with distributed motor controllers.

The distributed cameras are interfaced via firewire (1394) to the computer; with 1360x1024 pixel resolution for the "navcams" on each face of the hex frame, and 1024x768 resolution for the "toolcams" at each tool fixture. The servo control boards, as previously mentioned, were selected based on their functional similarity to an extreme-

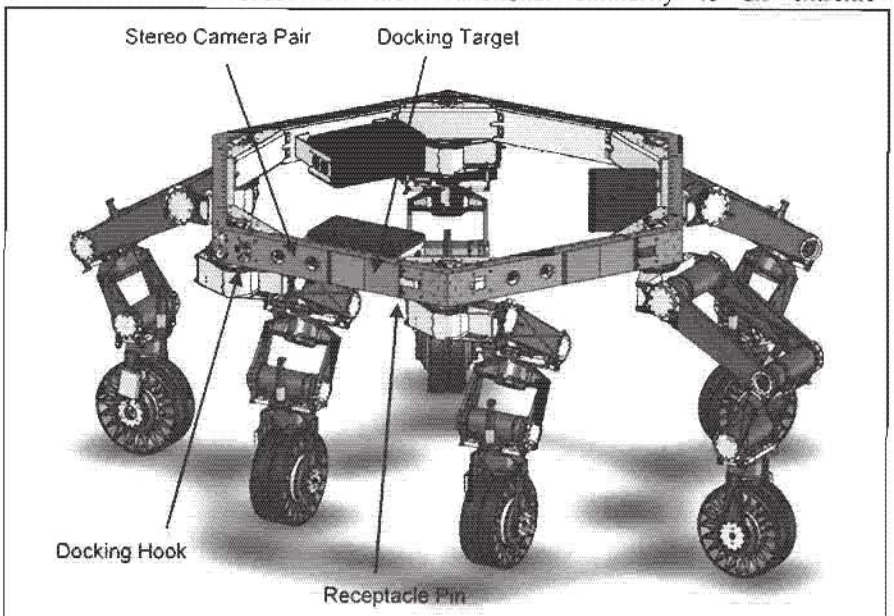

Figure 7: Docking configuration

environment motor controller under development at JPL that will allow the motor controllers to be placed on the extremities of ATHLETE with little or no thermal protection (even in the lunar polar craters, where the temperature can get well below 100K). All motors are brushless, so as to be similar to any flight system. A small custom printed-wiring board was developed for motor support (analog I/O, brake control, etc.)

An 802.11A/G wireless access point/ client allows commands and data to be exchanged with a control station implemented in a bus (used for field operations). Each vehicle has an inertial measurement unit (accelerometers and rate gyros). Power supplies include 480W 12V logic supply, 800W 24V brake supplies, and multiple 500W 48V primary motor bus supplies. The 48V supplies charge a stack of sealed lead-acid batteries. Batteries voltage and temperature are continuously monitored.

ATHLETE Software

The ATHLETE software runs on seven identical PowerPC processors. One is used as the main system CPU, handling most aspects of the system, including uplink, telemetry, system control, and mobility. The other six are dedicated to imaging to support real-time machine-vision processing on the six faces/legs while driving. The system is architected so that the vision processors could in the future be used as replacements for a failed central processor, also providing secondary pathways to the motor controllers; this capability is not implemented for the current units.

In order to support a future transition to flight, the software was designed on the model of a real flight system, the Mars Exploration Rovers (MER). This model includes breaking the software into modules, where the modules handle such areas as system initialization, timer services, commands, telemetry, motor control, higher-level mobility, and navigation. Modules are themselves broken into "objects," each of which encapsulates a very limited area of responsibility. Objects are implemented as hierarchical state machines, are loosely coupled, and communicate with each other using asynchronous messages to request services and deliver data [18]. The ATHLETE design uses a C++ base class from which all actual objects inherit (an embeddable subset of C++ is used). The base class binds together a state machine and a message queue. Multiple objects can share the same queue, allowing them to run in the same task context. Support software outside any object reads the queue and dispatches messages to the appropriate objects for processing. Samek's implementation of hierarchical state machines is used [19]. The majority of the system runs on the main CPU and is composed of 9 tasks running 94 objects, plus 3 utility tasks and one separate communications program without objects. Each of six peripheral CPUs has 5 tasks running 8 objects.

Imaging

Each vehicle has 24 cameras. There are 2 navcams on each face of the hex and 2 toolcams just above the wheel on each leg. The cameras are mounted in stereo pairs. Each camera has an approximately 90-degree field of view. The navcams are positioned to support driving. The toolcams are positioned to support tool and manipulation activities as well as for looking under the vehicle. Images from all the cameras are available both for human viewing and for autonomous use.

Ground commands can request that images be acquired from any camera individually or simultaneously from any stereo pair. The images are sent to the ground in the telemetry stream. In addition to the commands that request images on demand, there are commands to start and stop video streaming. A video stream is an ongoing series of images at a specified rate meant for near-real-time human viewing. The stream is throttled automatically to match the downlink telemetry bandwidth.

On MER the single command to acquire images was very complex, with many arguments to match the many acquisition and processing options that were available. While workable, having to supply every argument all of the time proved to be quite clumsy. On ATHLETE the commands are split out into two sets, one simple and one more complex. The simple one includes only those arguments that change routinely; defaults are used for the rest. The required arguments include the camera or cameras from which images are to be taken, and whether the images should be monochrome, color, or the underlying raw Bayer pattern from the CCD. The extended arguments include specifications for subframing, spatial downsampling, pixel size, and compression. The ICER and LOCO compressors from MER were used [20]. The simple command forms are used almost all the time.

The cameras are calibrated using the same models that were used on MER [20]. These models provide a mapping between the vehicle's shared 3D coordinate system and 2D image coordinates. All images are delivered with models attached so that the recipient has all the information needed to interpret the geometry of the scene. In the case of the toolcams, which are mounted on legs that move with respect to the vehicle coordinate system which is rigidly attached to the hex frame; the models are transformed to correspond to the instantaneous camera pose.

Visual Odometry

The first step in determining the motion of a wheeled robot is to use dead reckoning based on wheel odometry. The accuracy of this approach can be seriously degraded by wheel slippage. To augment dead reckoning other sensor data can be used. An inertial measurement unit (IMU) adds information about orientation but does not help with

translation. Vision-based analysis of the scenery can add information on both translation and rotation.

Visual-odometry software based on prior JPL work has recently been integrated into the system. Testing has only just begun, and no performance data is yet available. But successes on MER suggest we can expect good results. [22].

Future Plans for Visual Analysis

Over the balance of the program the following additional capabilities are planned:

- Stereo range maps. Dense 3D maps of the surrounding terrain will be produced. This data will be used for the following two capabilities.
- Hazard detection. The terrain maps will be analyzed while driving to identify potential hazards, allowing the vehicle to stop or drive around the obstructions.
- Footfall analysis. The terrain around the vehicle will be analyzed while walking to find suitable locations for placing the feet.
- Gesture recognition. Astronauts working alongside the vehicle will be able to make physical gestures with their bodies to issue commands.

Motion Control Software

The current command set for initiating vehicle motion consists of four different classes of commands: joint-space, Cartesian motion of one or more legs, Cartesian motion of the body keeping the wheels planted, and driving maneuvers. There was considerable design inheritance from the MER motor control, driving, and instrument deployment device control flight software.

Joint-space commanding allows an arbitrary set of joints to be run to prescribed angles - either relative to current joint angles, or to absolute angles. Motion is coordinated in that all specified motors are started simultaneously, with their peak velocities scaled so that goal angles are nominally reached simultaneously. A fault on any motor in the set halts all motors in the set. It is interesting to note that it would be rare for a single failed motor to disable the vehicle because of the large degree of redundancy in the system design. In the unlikely event that an actuator fails in a pose that disables the vehicle, adjacent limbs can make us of tools to amputate the failed limb.

Cartesian commands for moving the legs specify a goal position and orientation for the wheel fork of each leg (currently treated as a 6-DOF manipulator) to be moved. Position and orientation are linearly interpolated at intermediate via points, to give straight-line translation and smooth re-orientation. Motion from one via point to the next is done in joint-space, and advancement to the next goal via point is done when all joints angles are sufficiently close to the current goal. The tolerances are set to allow advancement while the legs are still moving, to avoid stopping at each intermediate position (which would cause jerky motion). If multiple legs are moved in the same command, their motions are coordinated to start and nominally end at the same time (even if one leg is to physically translate more than another). The entire trajectory is precomputed before any motion is done, and motion is not started if any part of the trajectory is unreachable.

Cartesian commands for the body allow a new body position and orientation to be specified. Intermediate via points are computed to allow the body to translate in a straight line and change orientation smoothly. The positions and orientations of each wheel fork is computed at these via points, to remain fixed in the global frame. One application would be doing fine body repositioning when docking two vehicles on rough terrain.

Currently, driving commands are implemented as standard 2D Ackerman driving primitives for all-wheel steered vehicles. This means the vehicle can drive along arbitrary circular arcs - about any pivot point. Ankle roll actuators are used for steering, and wheel speeds are scaled according to the turn radius at each wheel (wheels on the outside of a turn must spin faster than those on the inside of a turn). Straight-line driving and turn-in-place are special cases of the arbitrary circular arc primitive.

5. Summary and Conclusions

This paper describes the ATHLETE vehicle concept and the details of two fully-operational (and a third partly-operational) Software Development Models. Testing in the Mojave Desert of California and the terrain near Meteor Crater in northern Arizona confirms the power-efficient rolling mobility envisioned as part of the concept, especially when the contact forces are sensed and the pose of the vehicle adjusted to equalize the weight on each wheel. A quick-disconnect tool adapter has been developed for the limbs that allows the wheel motor to power any tool. Several tools have been developed, including a drill and a gripper. These tools have been extracted automatically from a "tool belt" and used for tasks such as drilling holes in the terrain, picking up moderate-sized payloads, unspooling umbilicals, etc.

ATHLETE is designed with smaller wheels and wheel drive actuators than would be used in a conventional vehicle, since they only need to successfully roll over "2-sigma" terrain, while walking mobility is used on more extreme terrain. The mass savings of these small wheel assemblies largely offsets the mass of the limbs and their actuators. Because of the low gravity on the moon, it appears that the mass of ATHLETE limbs can be as little as 5% of the gross mass of a vehicle. One attractive implication of this is that landers could be made mobile by using ATHLETE limbs to stabilize them during landing while using airbags or crushable material under the launch adapter ring to absorb

the primary impact energy. If landers are mobile, then there may be no reason to have separation interfaces to their payloads, because those payloads can be moved by the ATHLETE lander mobility system to wherever those payloads are needed. The mass savings by eliminating these separation interfaces may be greater than the mass increase for an ATHLETE-based landing system as compared to conventional landing legs such as those use by Apollo. Thus an ATHLETE-based lander, capable of power-efficient rolling mobility on moderate terrain, walking mobility on extreme terrain, and general-purpose manipulation and tool use, might actually be less massive than the straightforward alternative having none of these benefits.

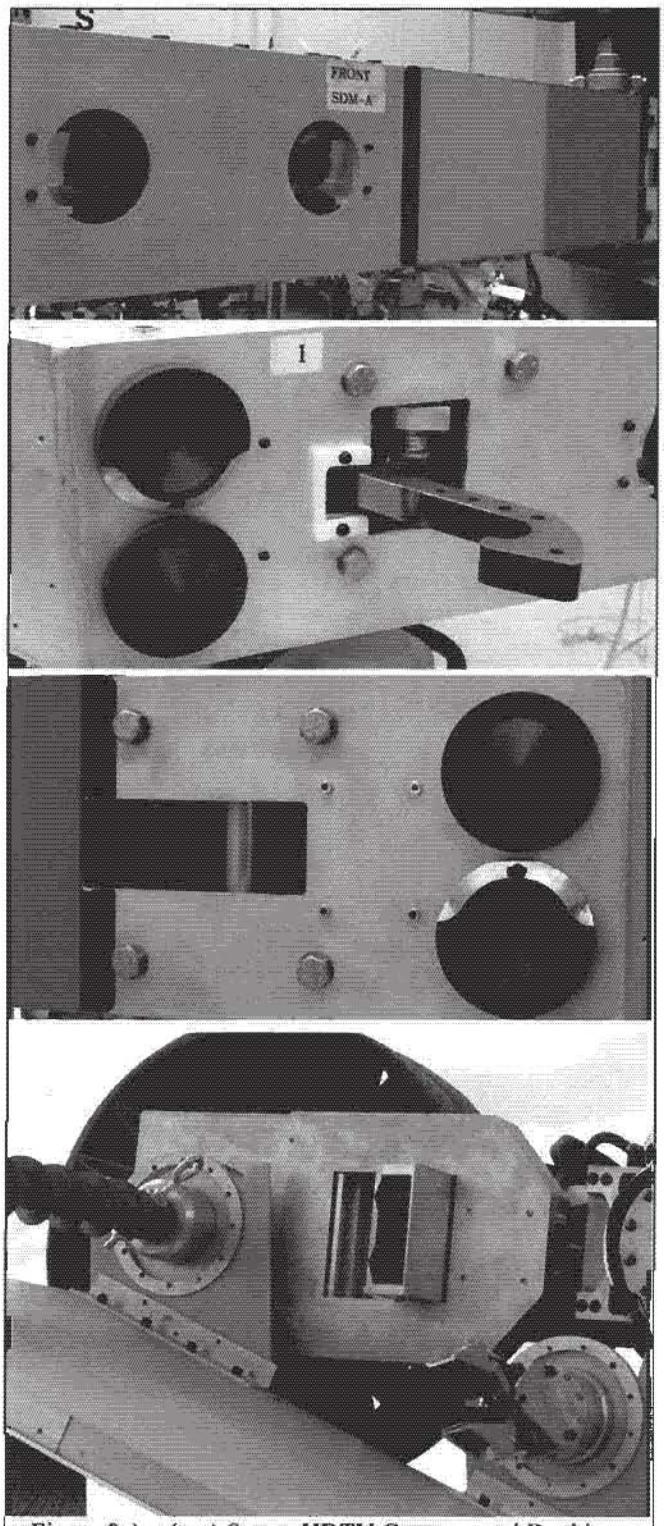

Figure 8a) – (top) Stereo HDTV Cameras and Docking Target, b) Docking Fixture, c)- Docking Recepticle, and d)- (bottom) Extracting tool (drill) from toolbelt, showing stereo HDTV toolcams.

Figures 8a-d show some details of many elements of the ATHLETE system developed as part of this project.

6. Acknowledgements

The research described in this publication was carried out at the Jet Propulsion Laboratory, California Institute of Technology, under a contract with the National Aeronautics and Space Administration. Major contributors to this effort include Jaret Matthews, Todd Litwin, Jeff Biesiadecki, Matt Heverly, Jack Morrison, Julie Townsend, Norman Ahmad, Allen Sirota, Brian Cooper, Curtis Tucker, Dean Holt, Charles Morris, Larry Broms, Susan Ung, Lien Pham, Frank Hartman, John Wright, Jeng Yen, Scott Maxwell, Michael Phillips, Beverly St Ange, Evelyn Reed, Kobie Boykins, and Paul Timmerman.

7. References

[1] S.V. Sreenivasan and B. H. Wilcox, "Stability and Traction Control of an Actively Actuated Micro-Rover", Journal of Robotic Systems 11 (6) (1994) 487-502. (Dr. Sreenivasan was a postdoc working in Wilcox's lab and was assigned to develop algorithms to control the GoFor vehicle (Fig. 2) developed by Wilcox in 1992. Dr. Sreenivasan is now an Associate Professor of Mechanical Engineering at UT Austin.)

[2] B. Wilcox and D. Gennery, "A Mars Rover For the 1990's", Journal of the British Interplanetary Society, Vol. 40, No. 10, pp. 483-488, October 1987.

[3] B. Wilcox, "Robotic Vehicles for Planetary Exploration", Journal of Applied Intelligence, 2nd Qtr 1992, pp. 181-193, Kluwer Academic Publishers, Boston MA.

[4] A. Mishkin, *Sojourner*, ISBN#0-425-19199-0, Berkley Books, New York, 2003. Approximately 40 references to this PI are listed in the index, spanning his contribution to the development of planetary rovers.

[5] Kennedy, Brett, H. Agazarian, Y. Cheng, M. Garrett, G. Hickey, T. Huntsberger, L. Magnone, C. Mahoney, A. Meyer, and J. Knight, "LEMUR: Legged Excursion Mechanical Utility Rover", Autonomous Robots vol.11, pp 201-205, Kluwer Press, 2001.

[6] Hickey, Gregory, Brett Kennedy, and Tony Ganino, "Intelligent Mobile Systems for Assembly, Maintenance, and Operations for Space Solar Power," Proceedings of the Space 2000 Conference, Albuquerque, NM, 2000

[7] Kennedy, Brett, Chris Leger, "Robotic End-Effectors for Hard Rock Climbing", NASA Tech Brief NPO-40224

[8] Kennedy, Brett, Michael Garrett, Avi Okon, "LEMUR IIb: Kinematic Modification for Robotic Climbing of Inclined Surfaces", NASA Tech Brief NPO-40354

[9] Kennedy, Brett, Hrand Aghazarian, Michael Garrett, Avi Okon, Matthew Robinson, "LEMUR II: A Dexterous and Adaptive Robotic System", NASA Tech Brief NPO-35140

[10] T. Bretl, S. Lall, J.C. Latombe, and S. Rock. Multi-Step Motion Planning for A Free-Climbing Robots. *Workshop on Algorithmic Foundations of Robotics (WAFR'04)*, Utrecht, The Netherlands, July 2004.

[11] T. Bretl, J.C. Latombe, and S. Rock. Toward Autonomous Free-Climbing Robots. *11th Int. Symp. on Robotics Research (ISRR'03)*, Siena, Italy, Oct. 19-22, 2003.

[12] T. Bretl, T. Miller, S.M. Rock, and J.C. Latombe. Climbing Robots in Natural Terrain. *7th Int. Symp. on Artificial Intelligence, Robotics and Automation in Space*, Nara, Japan, May 2003.

[13] T. Bretl, S.M. Rock, and J.C. Latombe. Motion Planning for a Three-Limbed Climbing Robot in Vertical Natural Terrain. *IEEE Int. Conf. on Robotics and Automation (ICRA'03)*, Taipei, Taiwan, 2003.

[14] T. Bretl, S. Rock, J.C. Latombe, B. Kennedy, and H. Aghazarian. Free-Climbing with a Multi-Use Robot, *Int. Symp. on Experimental Robotics (ISER'04)*, Singapore, June 2004.

[15] Bluethmann, Ambrose, Diftler, Huber et al, "Building An Autonomous Humanoid Tool User", IEEE Humanoids, 2004.

[16] Nickles and Huber, "Inertially Assisted Tracking for an Outdoor Rover", ICRA 2001.

[17] Kortenkamp, Huber and Bonasso, "Recognizing and Interpreting Gestures on a Mobile Robot, AAAI/IAAI, Vol 2, 1996.

[18] Glenn E. Reeves, Joseph F. Snyder, "An Overview of the Mars Exploration Rovers' Flight Software," IEEE Conference on Systems, Man, and Cybernetics, Big Island, Hawaii, Oct. 10-12, 2005.

[19] Samek, Miro. "Practical Statecharts in C/C++: Quantum Programming for Embedded Systems," Lawrence, Kansas: CMP Books, 2002, ISBN 1-57820-110-1.

[20] Todd E. Litwin, Justin N. Maki, "Imaging Services Flight Software on the Mars Exploration Rovers," 2005 IEEE International Conference on Systems, Man, and Cybernetics, Big Island, Hawaii, October 10-12, 2005.

[21] Richard Volpe, Todd Litwin, Larry Matthies, "Mobile Robot Localization by Remote Viewing of a Colored Cylinder," IEEE Conference on Robots and Systems (IROS), Pittsburgh, PA, Aug 5-9, 1995.

[22] Yang Cheng, Mark Maimone, Larry Matthies, "Visual Odometry on the Mars Exploration Rovers," IEEE Conference on Systems, Man and Cybernetics, Big Island, Hawaii, USA, October 2005.

8. BIOGRAPHY

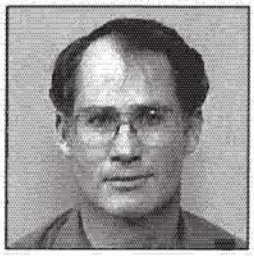

Brian Wilcox is a Principal Member of the Technical Staff at the Jet Propulsion Laboratory. He is the Principal Investigator of several efforts, including ATHLETE. He was the Supervisor of the Robotic Vehicles Group at JPL for over 20 years, during which time the group was responsible for the development of the Mars Rover "Sojourner" electronics, on-board software, ground operations software, and mission operations. Brian was personally responsible for the development of the imaging and hazard avoidance sensors and the hazard avoidance algorithms on Sojourner. Brian has a BS in Physics and a BA in Mathematics from the University of California at Santa Barbara, and an MS in Electrical Engineering from the University of Southern California.
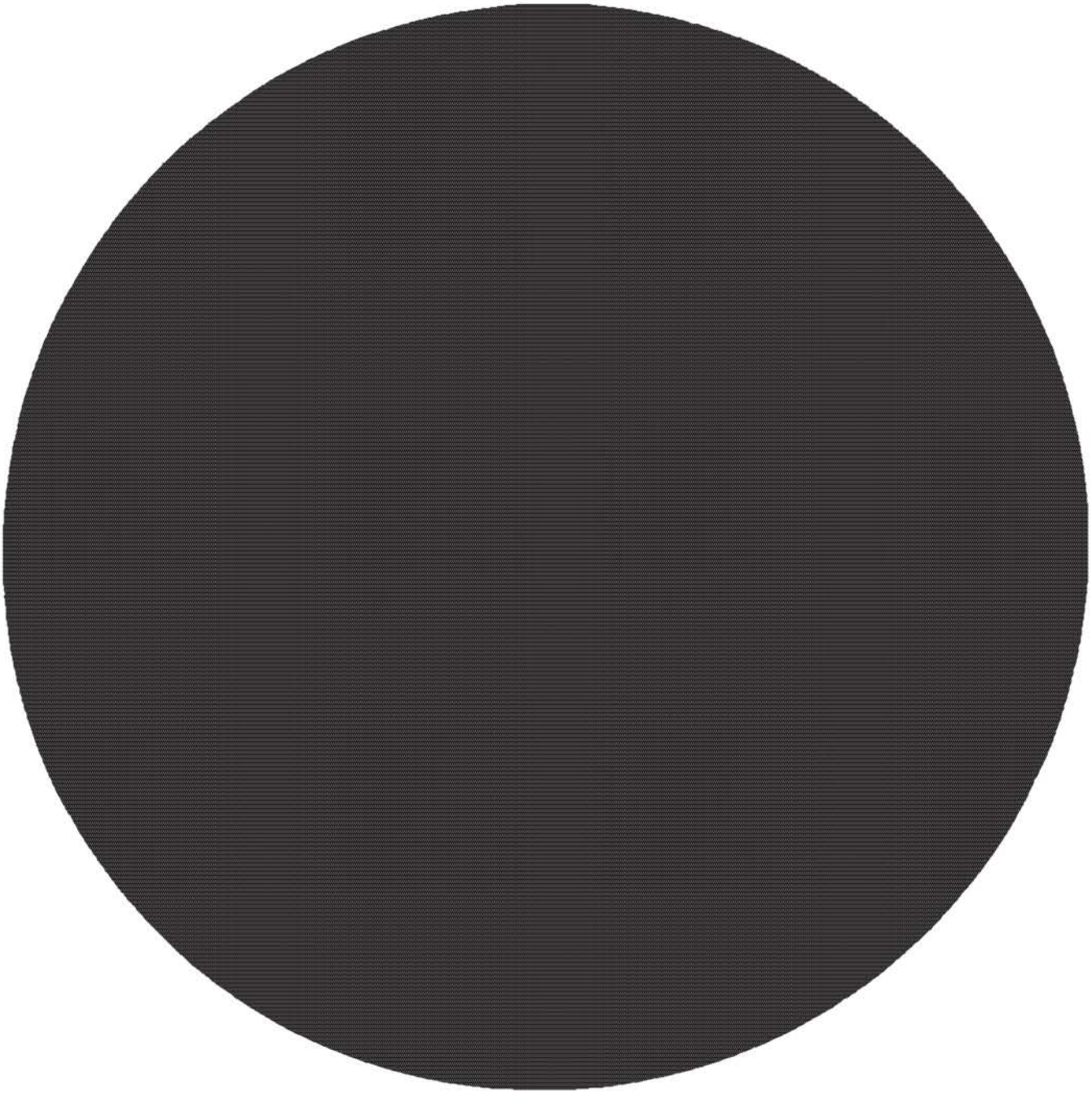
End of File