National Aeronautics and
Space Administration

Jet Propulsion Laboratory
California Institute of Technology
Pasadena, California

COHERENT OPTICAL ARRAY RECEIVER EXPERIMENT: DESIGN, IMPLEMENTATION AND BER PERFORMANCE OF A MULTICHANNEL COHERENT OPTICAL RECEIVER FOR PPM SIGNALS UNDER ATMOSPHERIC TURBULENCE

MI CHELA MUÑOZ FERNÁNDEZ

Coherent Optical Receiver Experiment-CORE

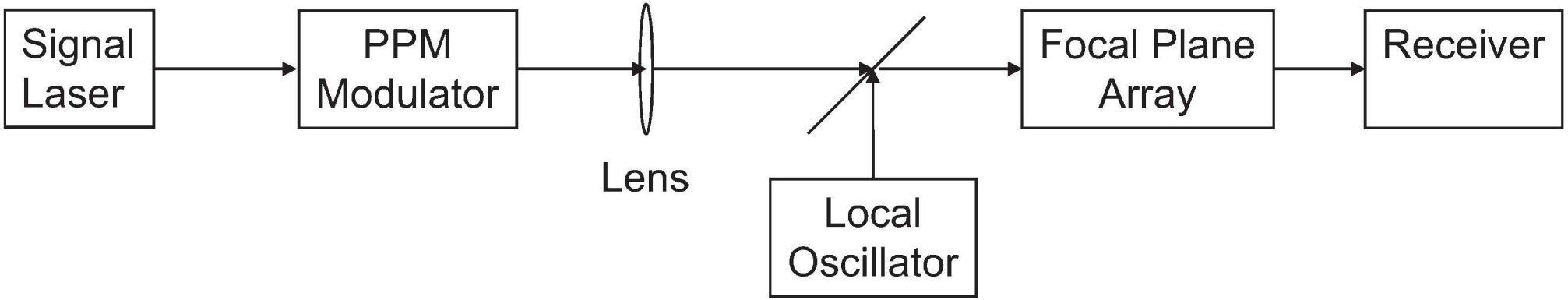

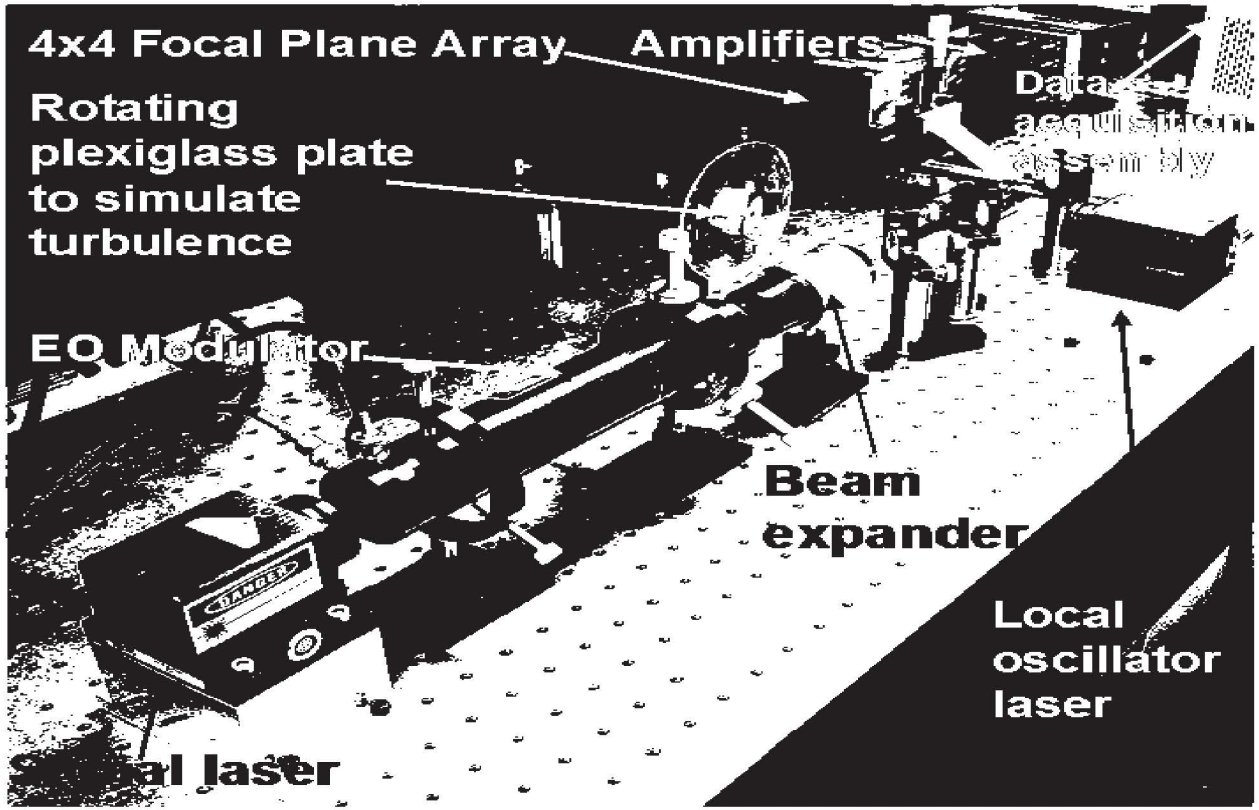

Noncoherent Receiver

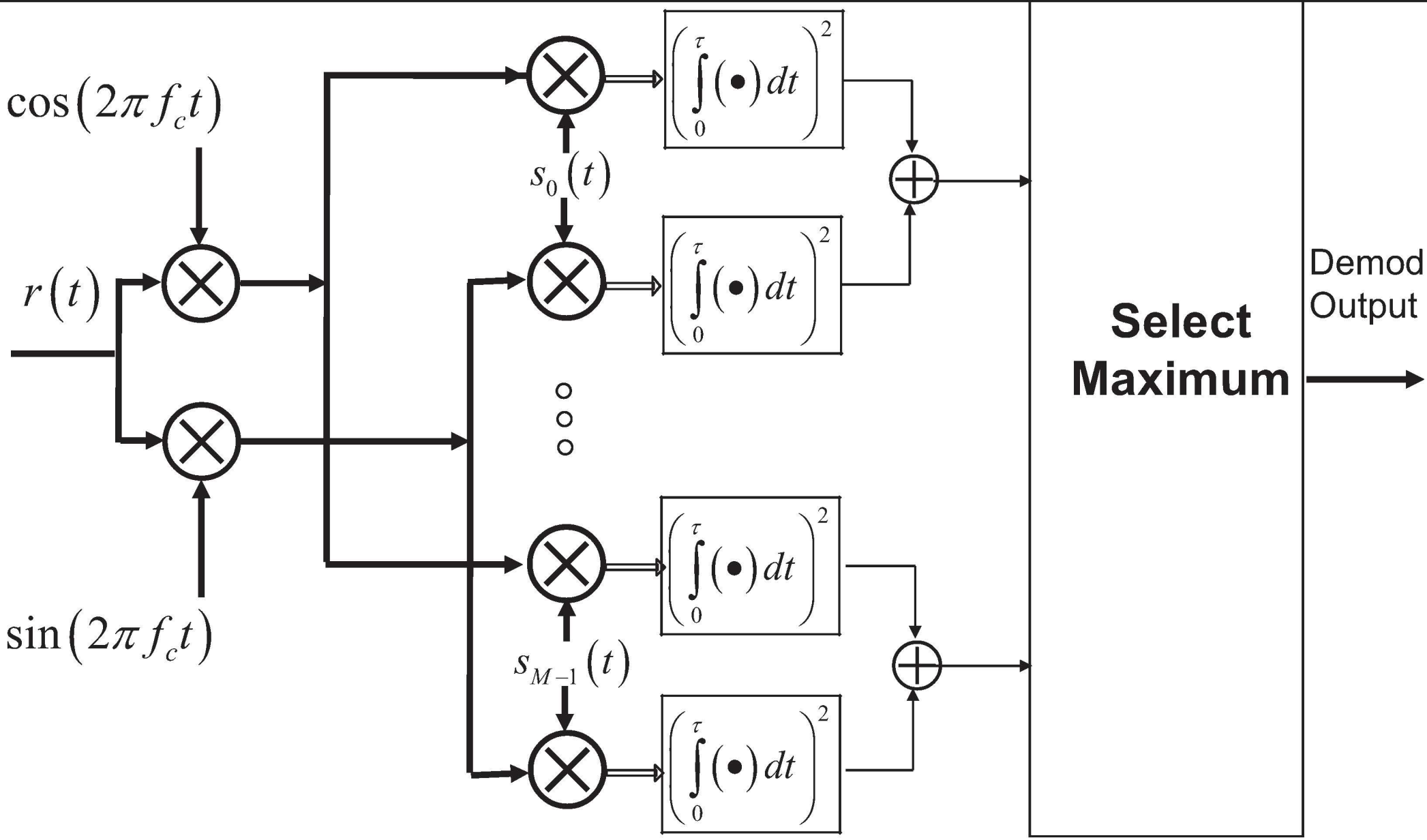

Adaptive Combining with LMS

- Received signal

$$\mathbf{r}(k) = \mathbf{s}(k) + \mathbf{n}(k)$$

- The output of the linear combiner is

$$y(k) = \mathbf{w}^H(k)\mathbf{r}(k)$$

- The goal is to minimize the mean squared error (MSE)

$$\mathrm{MSE}(k) = E\left[\left|d(k) - y(k)\right|^2\right]$$

LMS with Decision Feedback

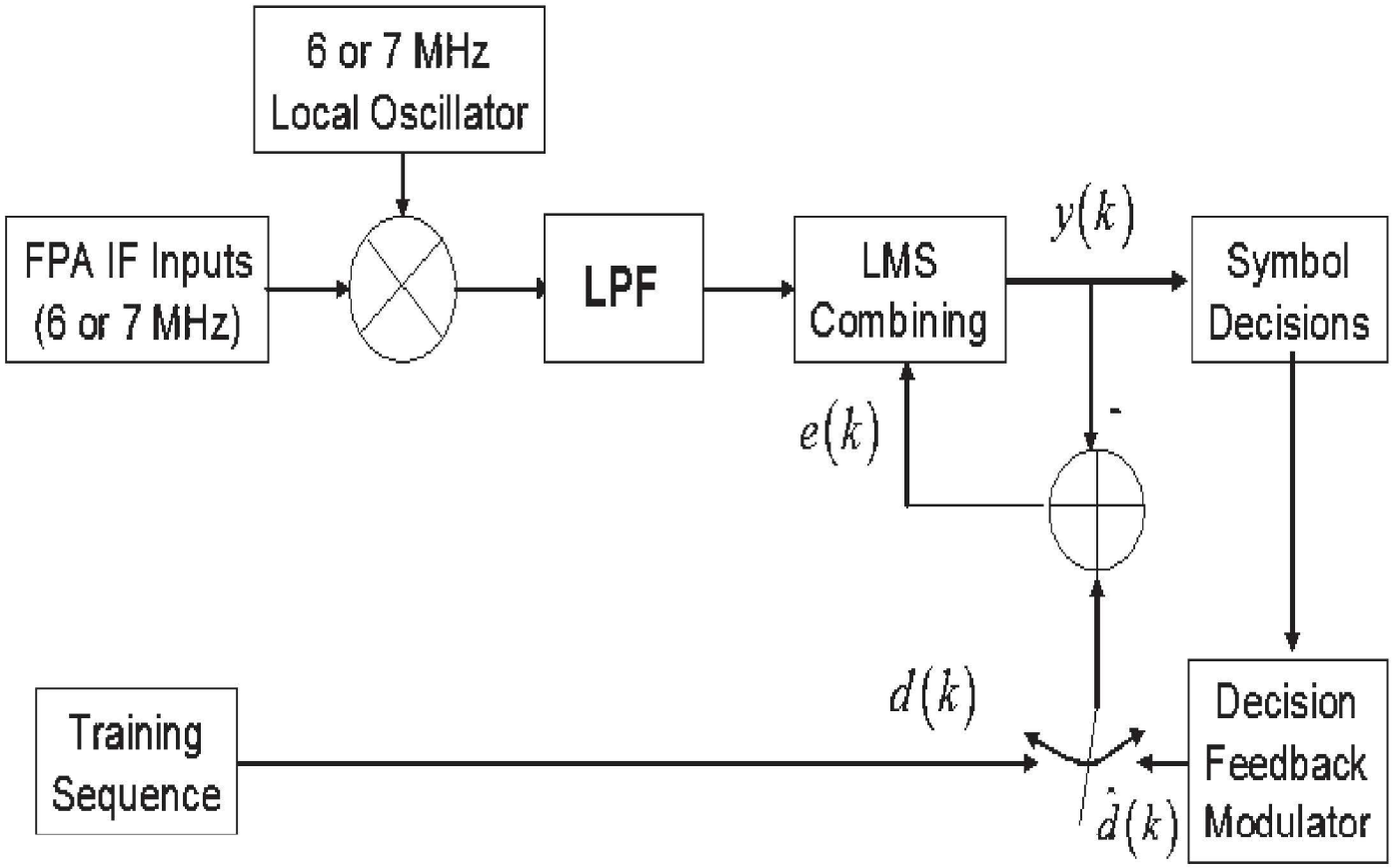

LMS Convergence
Small Step Size

256 PPM

$$\dot{\mu}_{\max} = 1.53 \cdot 10^3$$

- The LMS algorithm converges with

$$\mu_{\max} = 1000$$

- The LMS algorithm becomes unstable with a value larger than

$$\mu_{\max} = 1.53 \cdot 10^3$$

LMS Convergence

$$\mu = 1000 \qquad \mu_{\max} = 1.53 \cdot 10^3$$

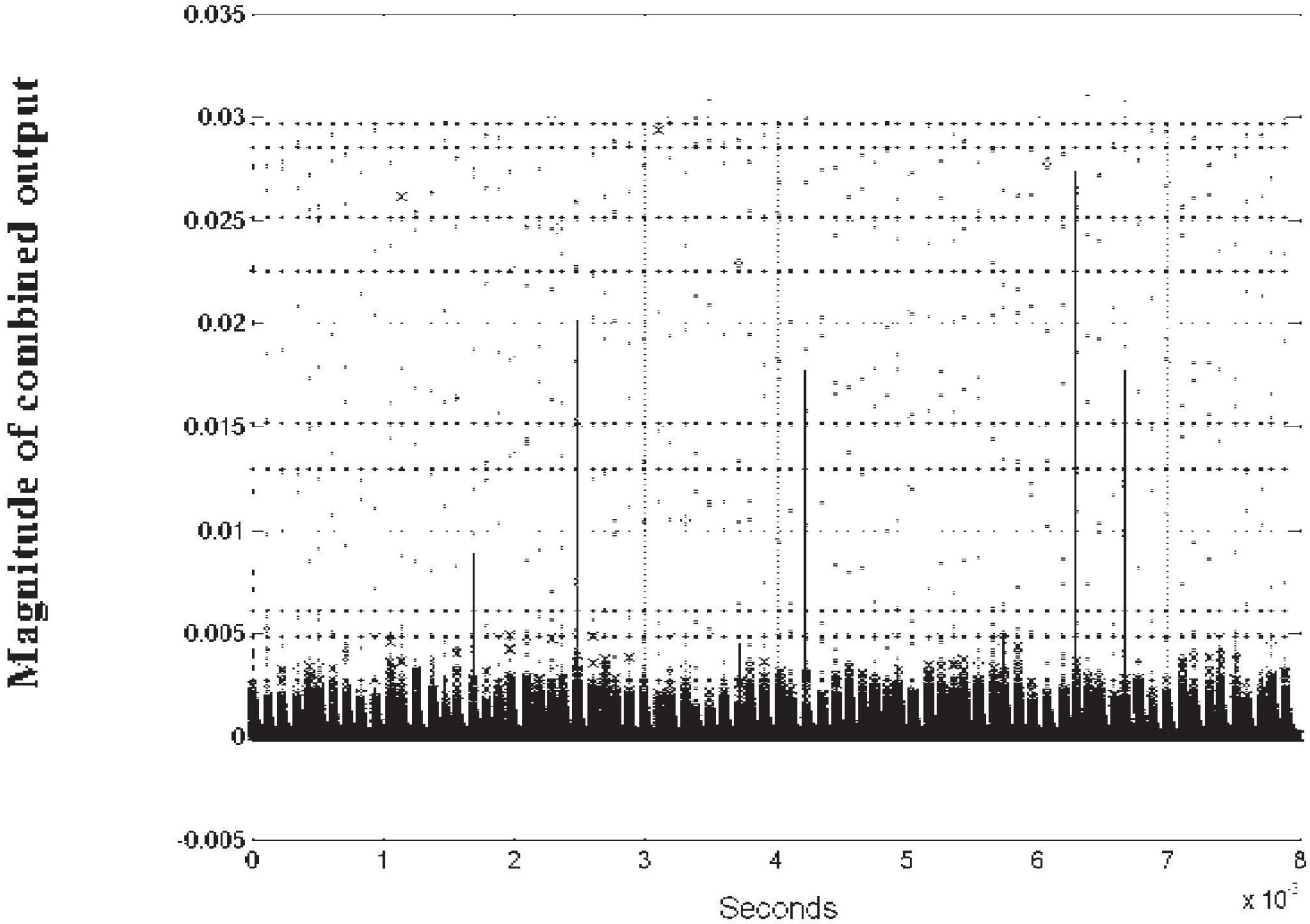

Phase of weights and channel

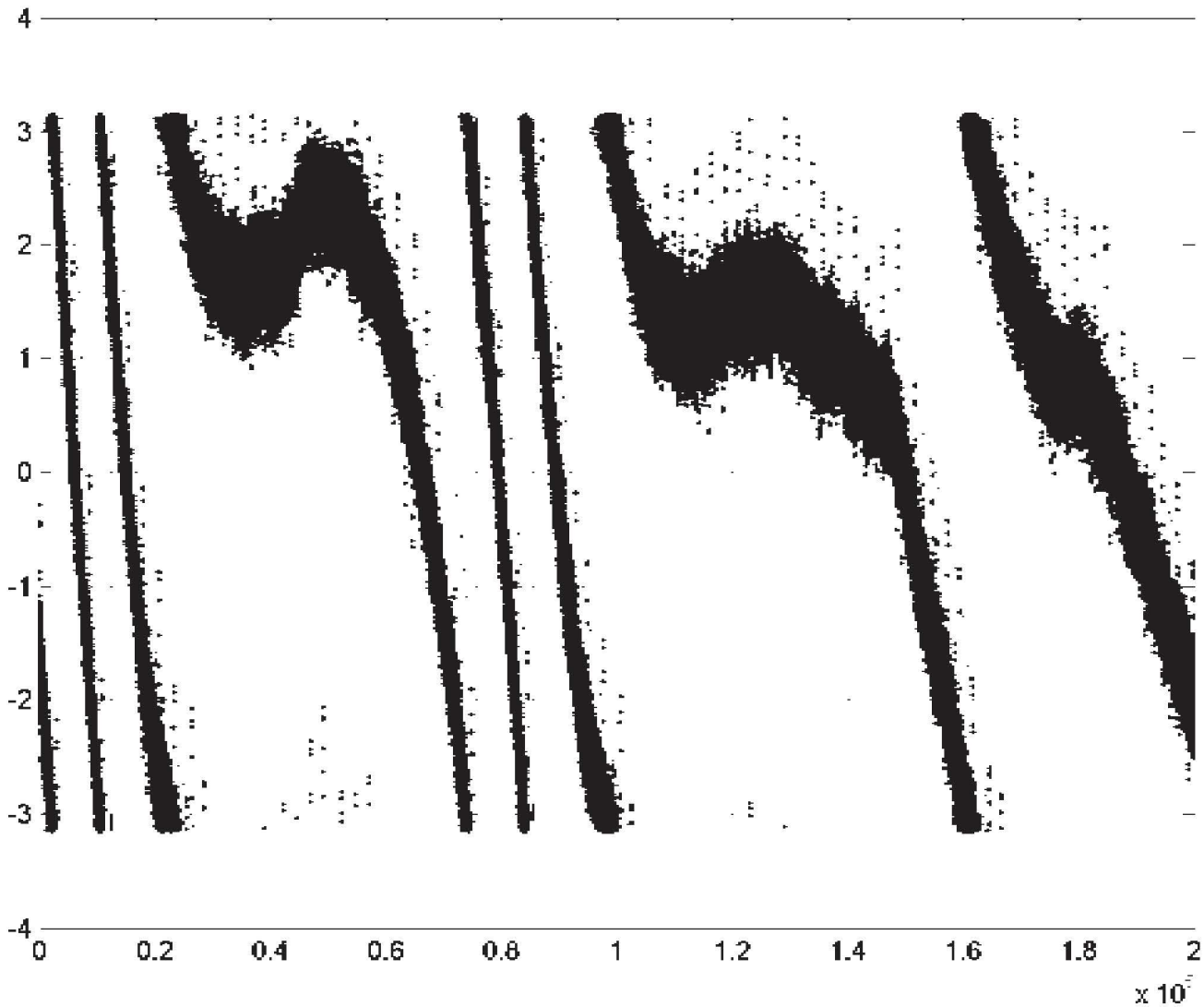

Single Detector 256 PPM BER vs. Ks

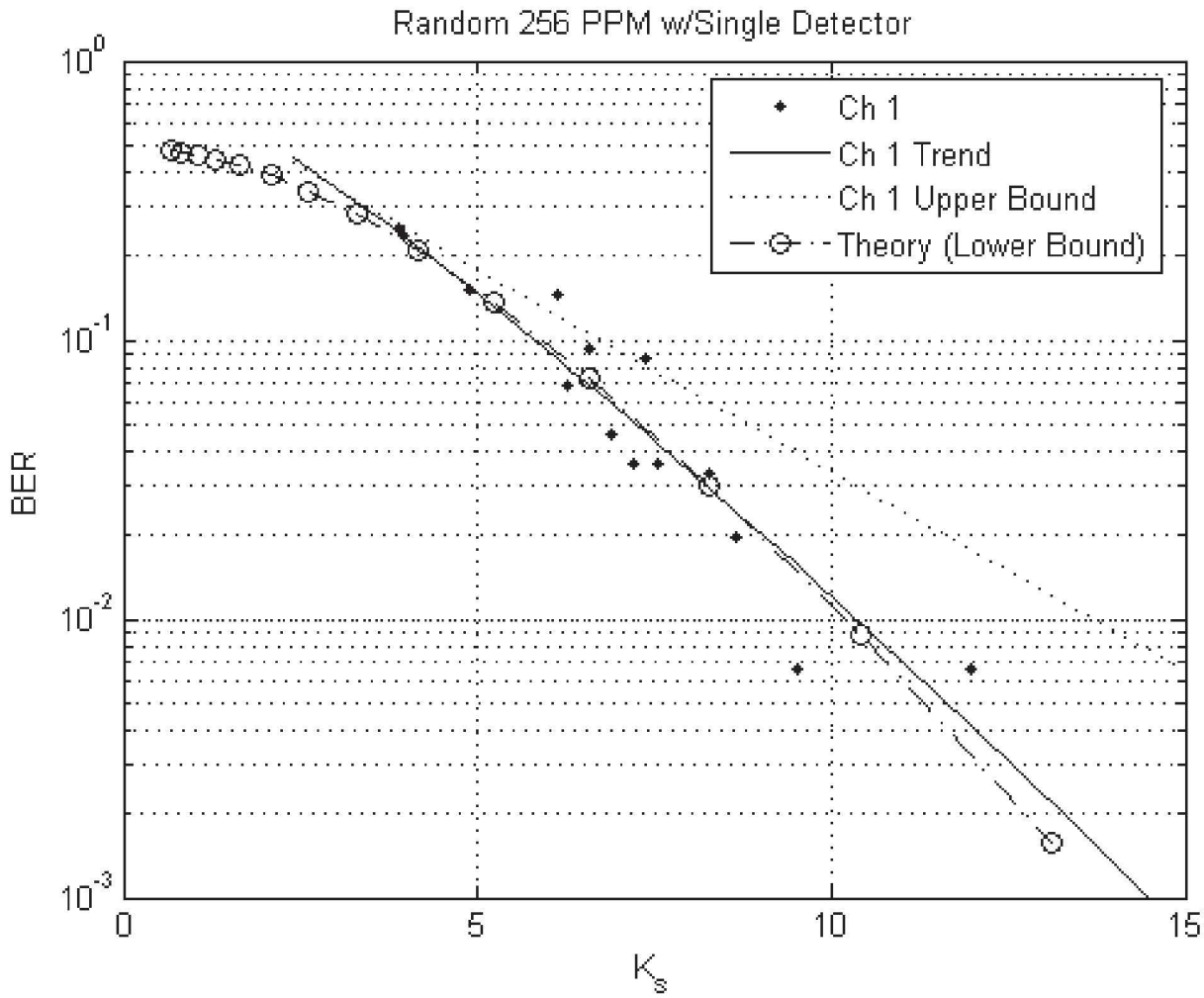

Single Detector 256 PPM
BER vs.(Photons per Bit)-PPB

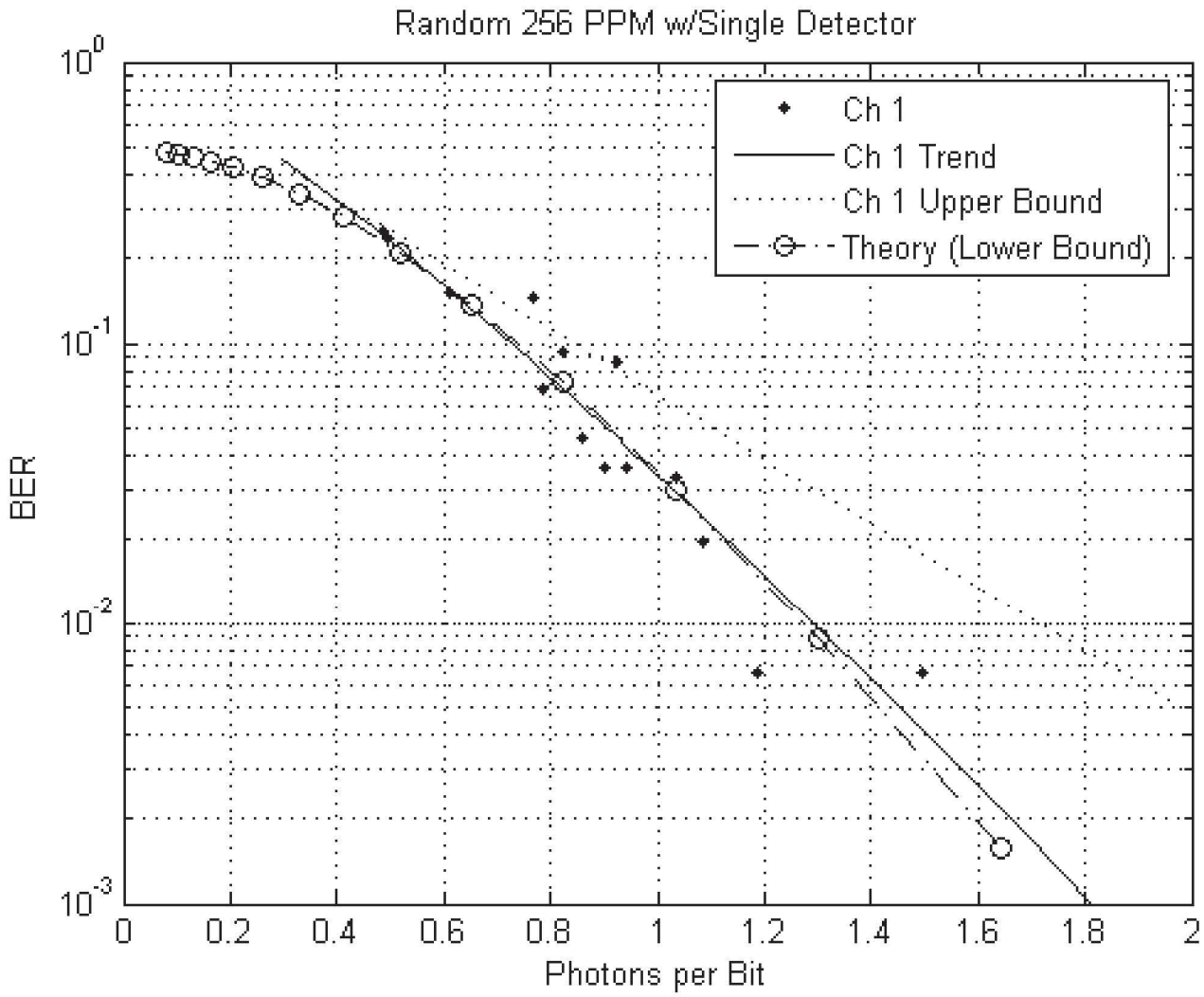

Single Detector 256 PPM
BER vs. Es/N0

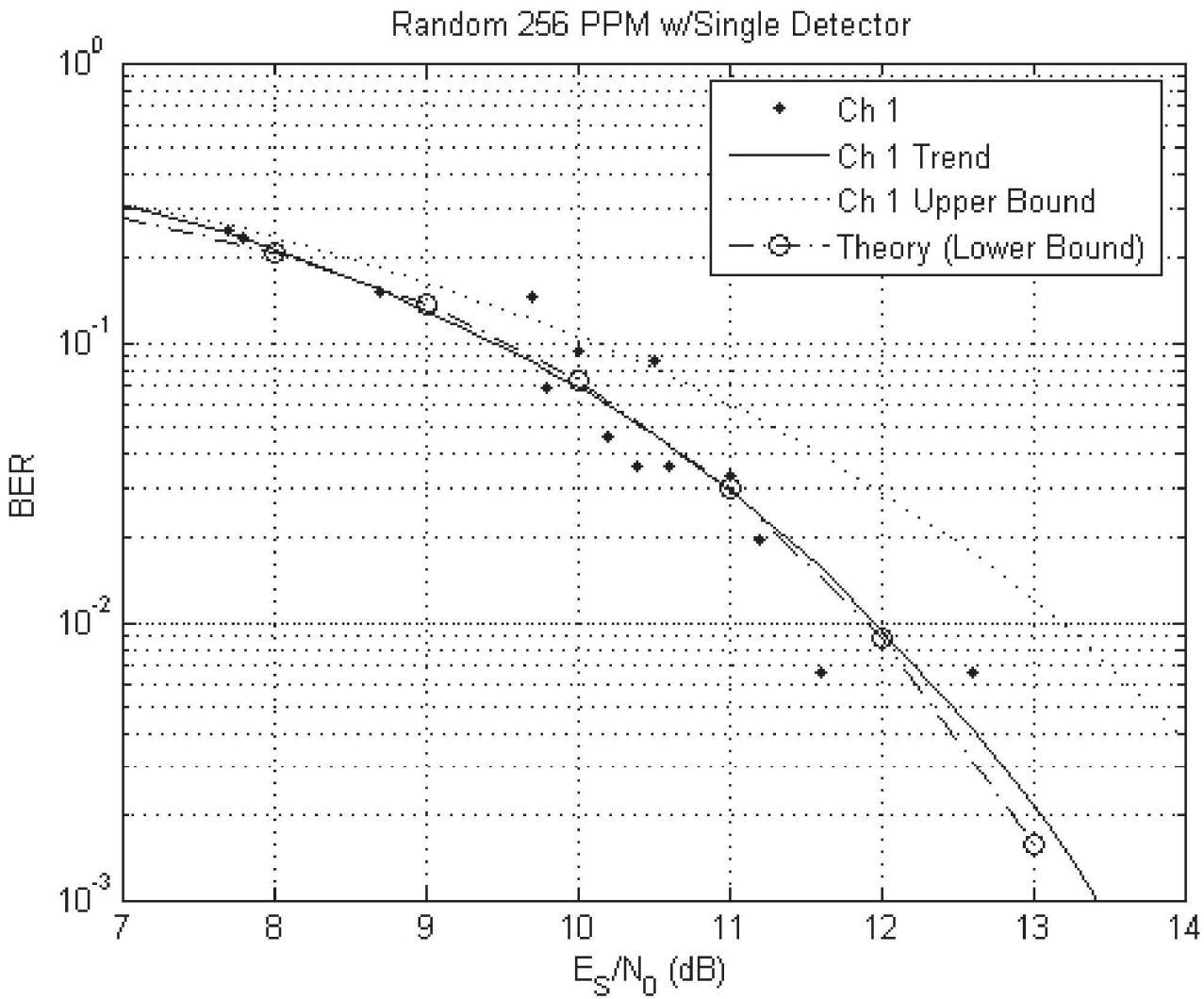

FPA 256 PPM- BER vs. Es/N0

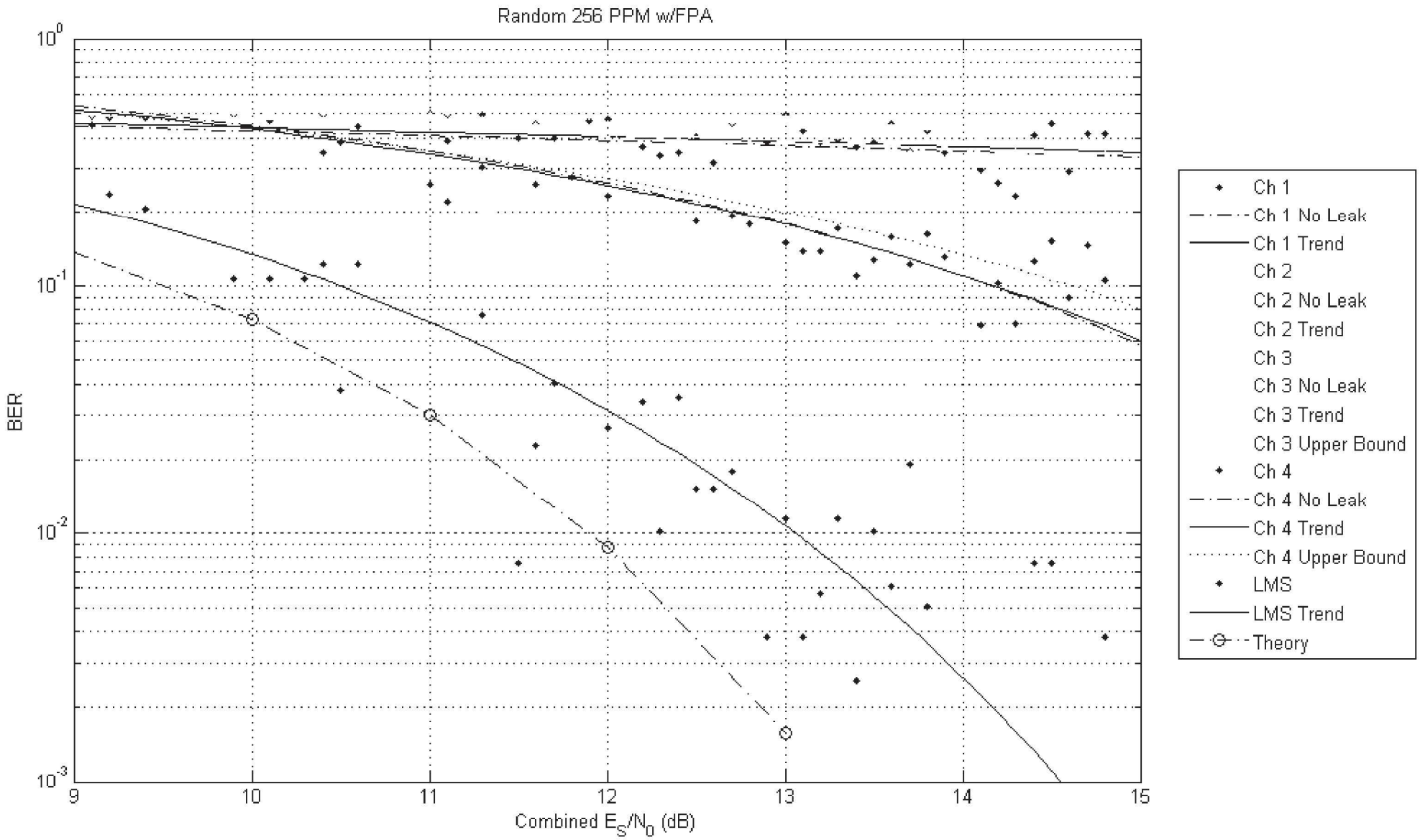

Actual FPA
BER vs Ks (256 PPM)

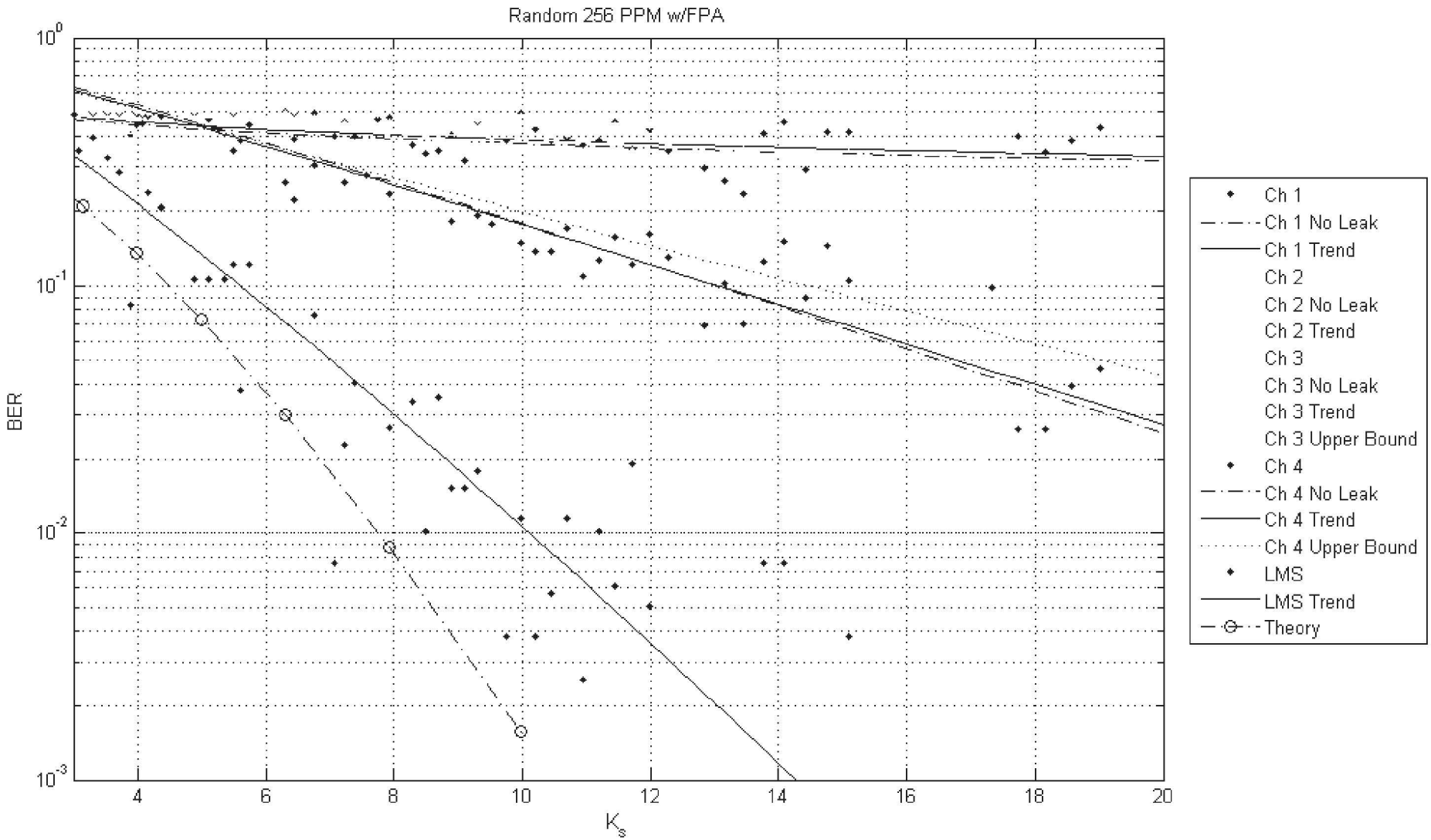

Hypothetical Shot Noise Limited FPA
BER vs. Photons per Bit (256 PPM)

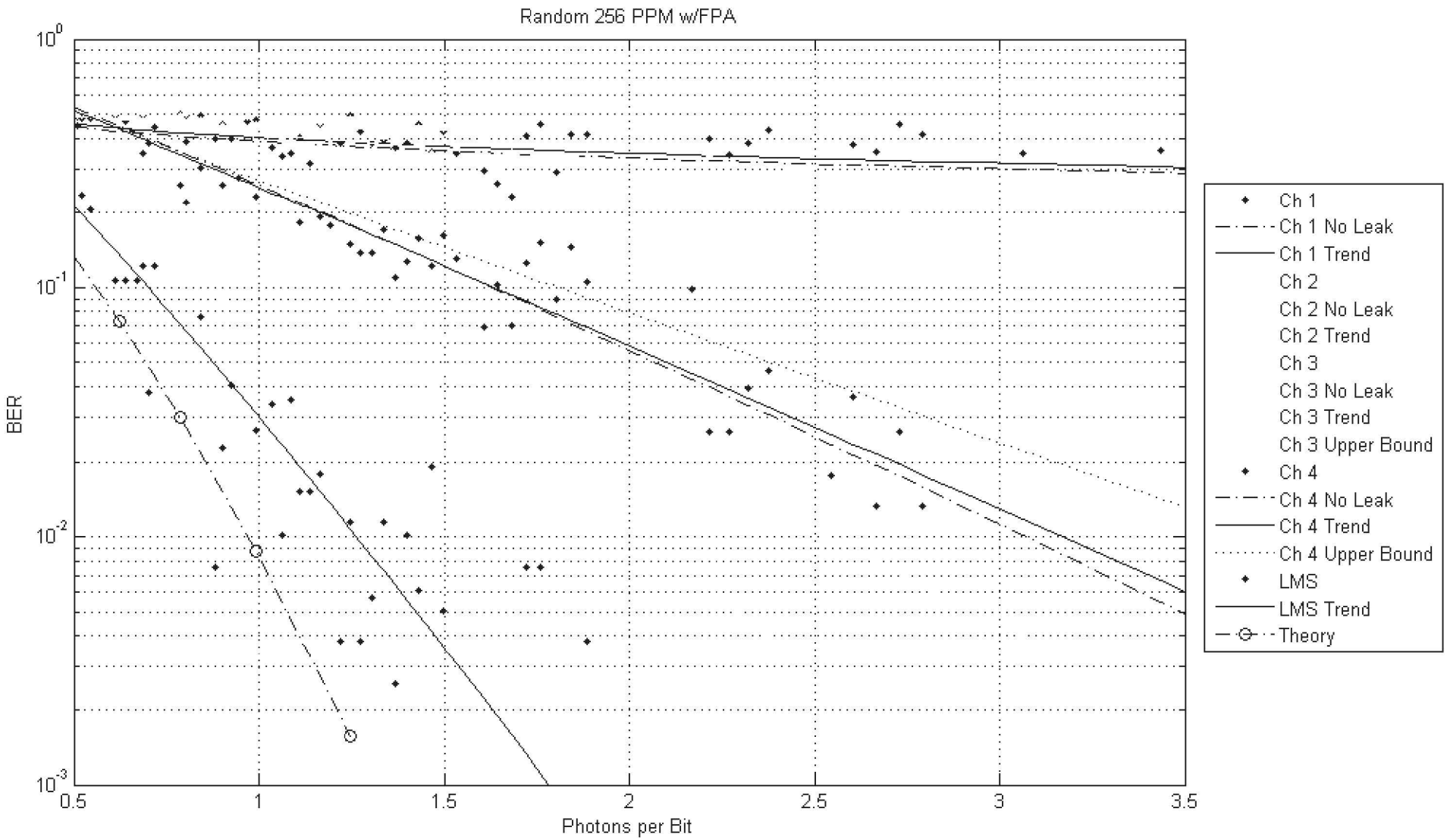

Conclusions and Future work

- In summary, the system designed presented herein has been shown, through both analysis and experiments, to have the potential to achieve BER performance 1dB away from the theoretical curve in the presence of weak signals and in the presence of distorted focal plane signal fields that result from phase distortions due to atmospheric turbulence

- The technology developed here can enable fundamental gains in the performance of deep space communication links by overcoming both weak signal limitations and signal degradation due to atmospheric phase distortions

Future directions

- Coherent combining algorithms for focal plane arrays. In a realistic space communications system utilizing PPM, the relative positions of the spacecraft and the ground receiver will change by many optical wavelengths between PPM pulses. Since no signal exists during the inter-pulse intervals, tracking of the spacecraft signal phase poses a special challenge.
- The use of coding would unleash the true potential of the focal plane array receiver. Uncoded bit error rates below are achievable using a shot-noise-limited receiver running at slightly less than one photon per bit. Corresponding coded bit error rates would be significantly lower, enabling very robust digital communications at low signal levels. The ability to communicate reliably at such weak signal levels would greatly extend the utility and usefulness of optical communications for deep space, especially in light of the severe demands generated by deep space link budgets.

Convergence Test with Decision Feedback Errors

- **Test objective**
  - Determine the convergence behavior of LMS when decision feedback errors are made
  - Necessary since very large values of μ lead to fast convergence times and potentially serious issues in the face of decision feedback errors
- **Test procedure**
  - Intentionally introduce an error in the target sequence *d*(*k*)
  - Observe the effects on LMS convergence for μ
  - Exponential sweep chosen to allow rapid test of a range of μ over two orders of magnitude

$$\mu \in \left\{10^{0.0}, 10^{0.1}, 10^{0.2}, \ldots, 10^{2.0}\right\}$$

- **Test results**
  - Require small values of
  - Converges for

$$\mu \leq 10^{0.8} \approx 6.3$$
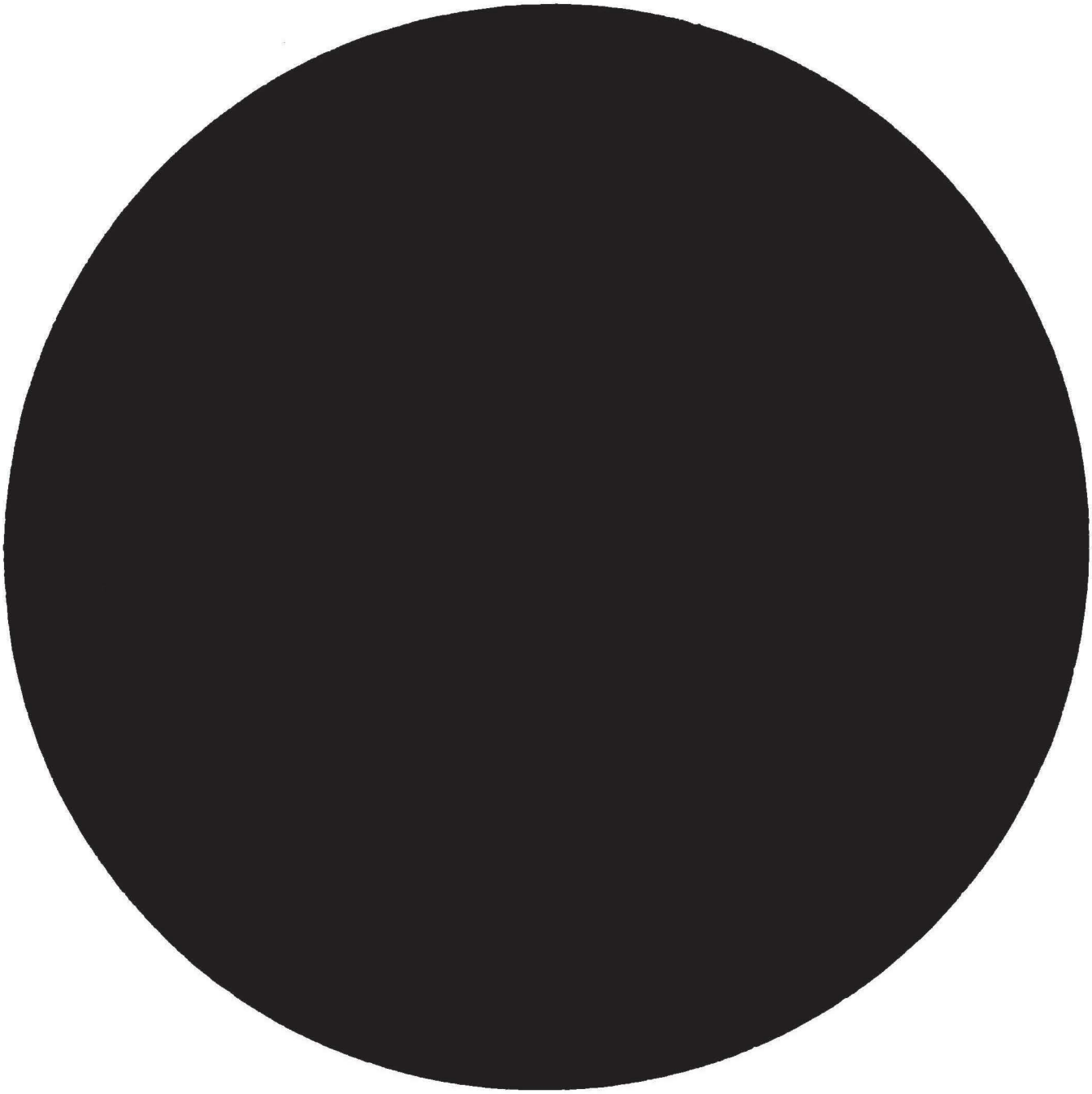
End of File