Dilute Aperture Visible Nulling Coronagraph Imaging (DAViNCI)

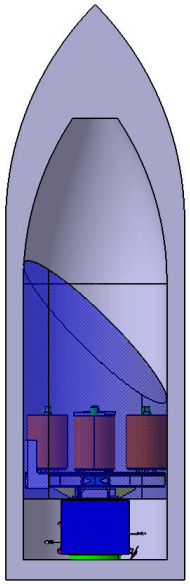

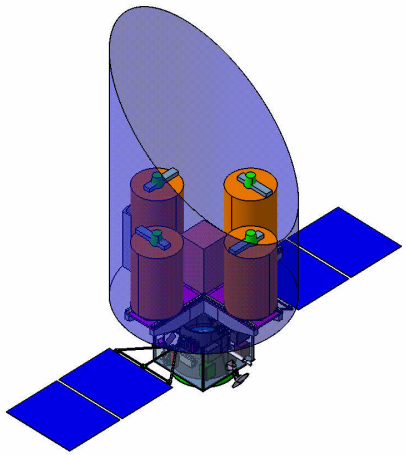

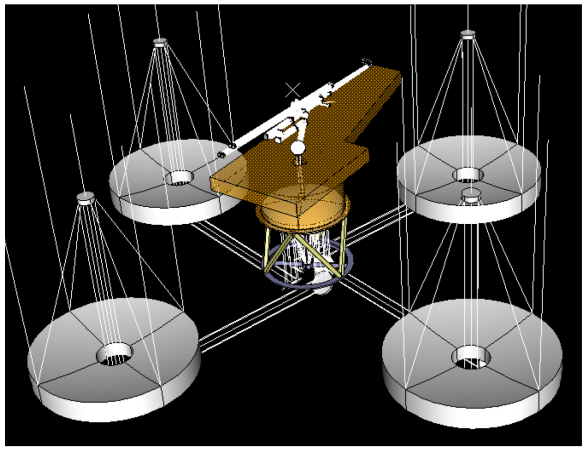

Michael Shao , B. M.Levine, G. Vasisht, JPL, B. F. Lane, Draper Labs, R. Woodruff, G. Vasudevan, Lockheed-Martin, R. Samuele, Northop Grumman, K. Havey, ITT, M. Clampin, R. Lyon, NASA/GSFC, O. Guyon, U. Arizona, V. Tolls, SAO

AAS Jan 2009

DAViNCI

Copyright 2008 California Institute of Technology. Government sponsorship acknowledged.

Outline

- Instrument and Mission Overview
  - 4 1.1m telescopes, inside of a 4.5m fairing. Nulling coronagraph
    - Equal collecting area to a 2.2m telescope, but telescope costs much lower than a filled aperture on axis 2.2m telescop
  - Team X cost ~1.1 B + Launch vehicle. Cost roughly equal to a ~2.5m coronagraph (@ 2 λ/D)
- Science Case
  - 40 mas IWA @ 800nm (Inner Working angle ~25mas @ 500nm)
  - Search for Earths over a ~10X volume of space than a large external occulter or 4m filled aperture coronagraph
- Team X study
- Technology status
  - vis nulling coronagraph testbed, segmented MEMs Deformable Mirror

DAViNCI

DAViNCI Study Milestones

- Current Milestones Achieved
  - TEAM X Mission Study I- 17-19 June 2008
    - Baseline configuration, mission definition, and costing
  - Science Baseline study draft
  - Instrument Concept Definitions:
    - Interferometer optical design
    - Imager and Spectrometer defined
    - ACS Optical Train defined
  - Operations scenario defined
  - TEAM X Instrument Study 10-11 September 2008
    - Update Instrument cost estimate
    - Detailed Materials and Equipment List
- Next major Milestones upcoming
  - TEAM X Mission Study II- 2-4 December 2008
  - AAS meeting Paper and Poster (Jan 09)
  - Report Drafts (Jan-March 09)
    - Revise science and design analyses

DAVINCI Science Case

- DAViNCI, with 4x1.1m telescope has the same science potential (for Earths @ 1AU) as a ~7m (PIAA) coronagraph.
  - Davinci 35mas IWA @ 780nm (Oxygen)
  - 4m PIAA (2 λ/D) IWA 80mas @780nm
  - Largest external occulter ~75mas IWA (@800nm)
  - # potential targets ~ IWA^{-3}
- How many targets are needed?
  - What's a good guess on eta_earth? (30% of stars have sub-Neptune planets (5~50 Mearth), from 0.03 to 0.3AU) ~10% of stars have a terrestrial planet in the HZ.
- DAVINCI has significantly less collecting area (roughly equal to HST) than a GIANT filled aperture coronagraph. But it's adequate for a search of ~160 Earths
  - An Earth @10pc is 29.5 mag. HST ACS (F606W) takes 4.5hrs to get a SNR=6 image of a 29.5mag star. ACS83620

DAViNCI

Science I

- DAVINCI has ~100% Lyot efficiency
  - In a Lyot coronagraph, working at 2~4 λ/D, there is a mask at a reimaged pupil (Lyot stop) that "blocks" the starlight diffracted by the coronagraphic mask. Lyot efficiency of TPF-C/FB1 ~ 30% @ 4 λ/D
  - With 100% Lyot efficiency, DAVINCI has roughly the ~1/2 the sensitivity of the TPF-C FB1, 8m*3.5m coronagrah
  - DAVINCI sensitivity is comparable to a 4m Lyot coronagraph because of 100% Lyot efficiency
- The Major advantage of DAVINCI is that it has an inner working angle of **~35mas** @ 780nm (Oxygen line) equal to an **8m coronagraph** working at **2 λ/D**.

DAViNCI

Number of Targets vs Inner Working Angle

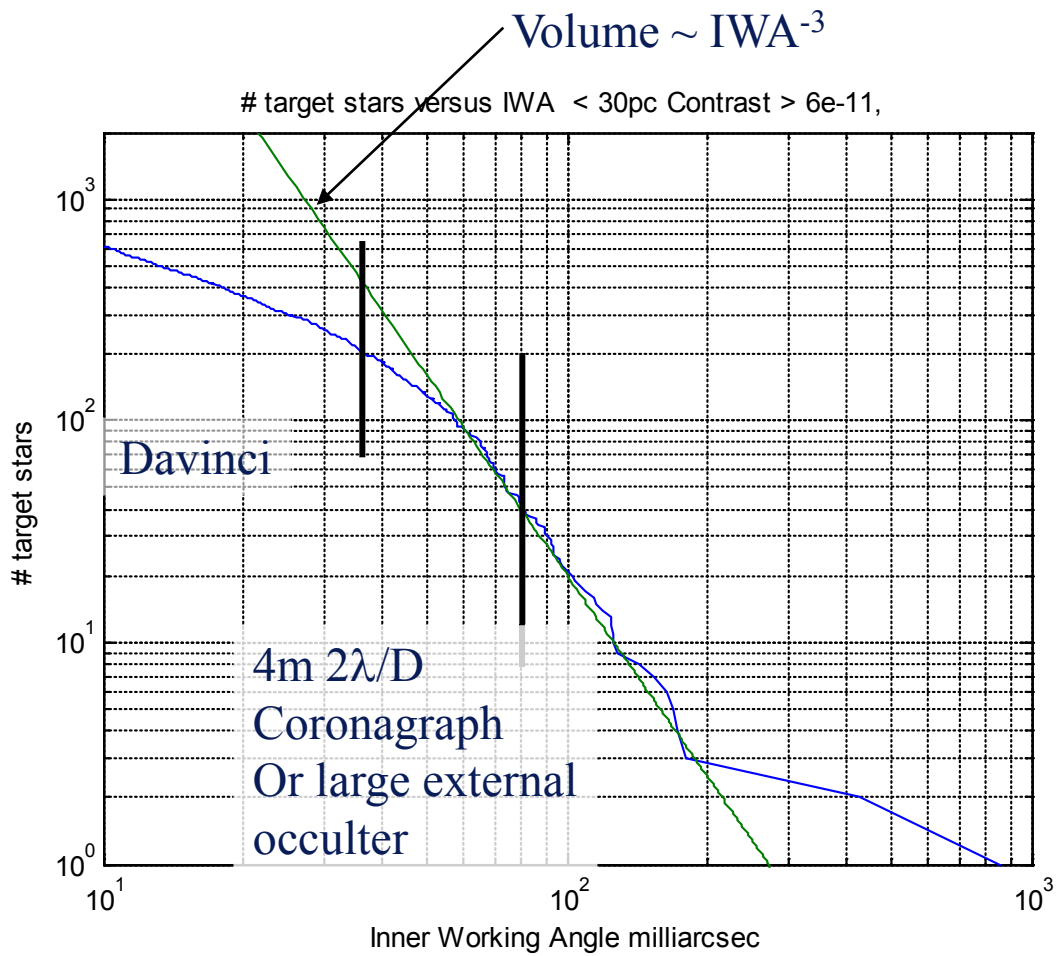

Put a 1 Mearth planet at mid-HZ (1AU*sqrt(lum)) every star.

Contrast limit 6e-11 (Earth-Sun is 1.2e-10)

Brightness of planet < 31.2mag

IWA @ 780nm (oxygen line)

If the max planet separation is just barely larger than the IWA, we can't really measure its spectra. (If the planet is visible only 3 days/yr, and it take 30 days to detect O_2 in the spectra, it will take 10yrs.)

DAViNCI

Planet Orbit can't be Just = IWA

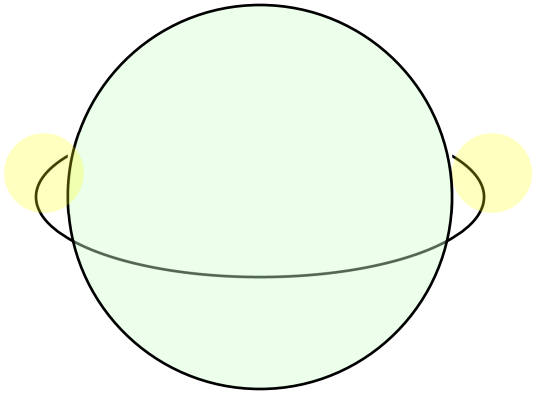

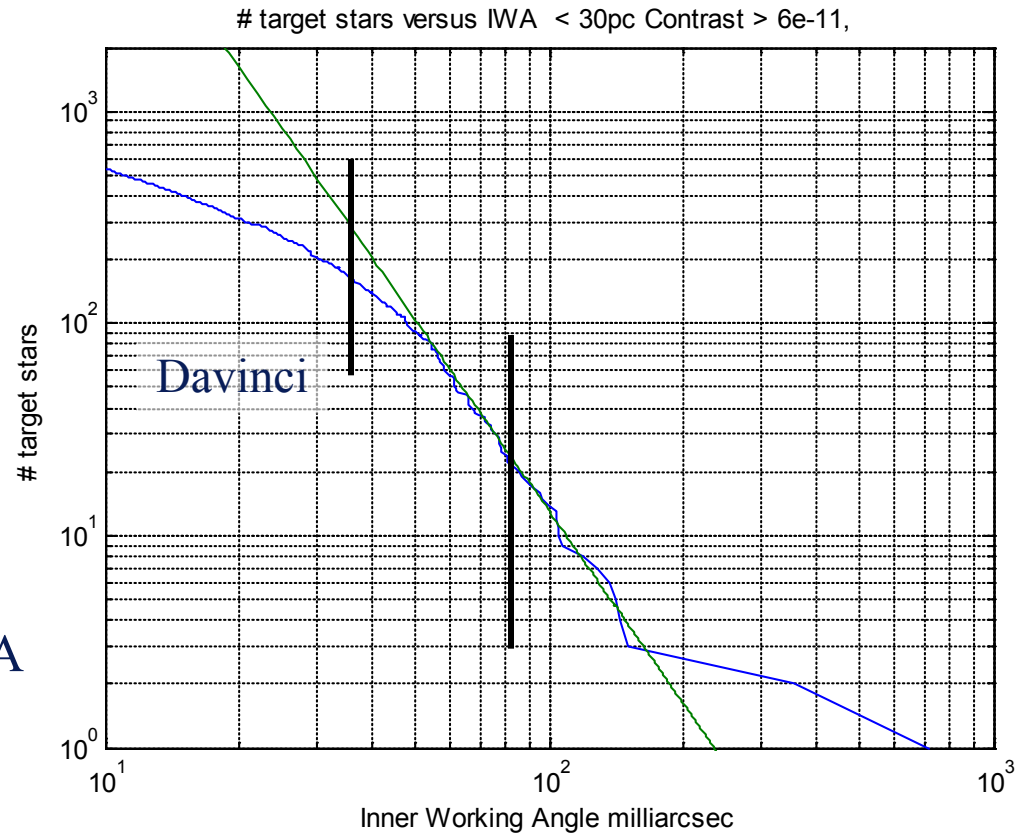

Planet orbit 20% larger than IWA only detectable ~10% of year.

We crudely estimate that the max star planet separation has to be > 20% larger than the IWA for meaningful science to be possible.

25~30 Stars vs ~160 stars

IWA*1.2 < Max star-planet sep

DAViNCI

B=2.4m Baseline 4.5m Tip-Tip

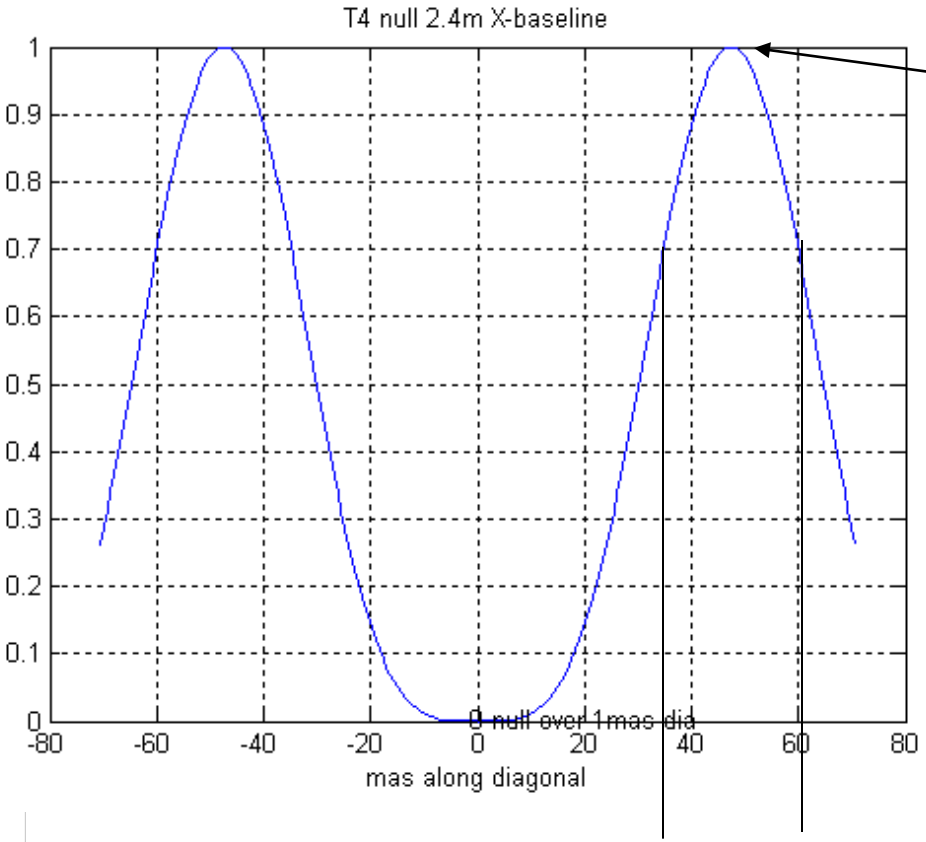

1.414*λ/(2B) = 47mas

At its longest baseline, Davinci has an inner working Angle of ~35mas @ 780nm

Corner-corner baseline 3.4m

Roughly equal to ~7m coronagraph working at 2 λ/D

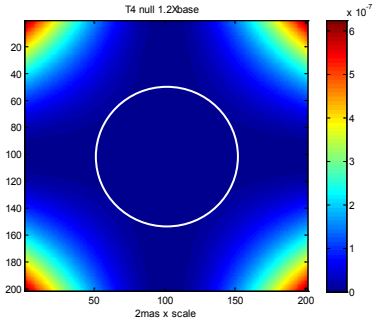

1st Transmission peak spans 35~60 mas roughly a factor of 2.

DAViNCI

Team X Mission Study Summary

- 1.5*Probe Class /Flagship Class
- High Level Mission Description
  - Launch Vehicle: Atlas V 521
  - Orbit: Earth-Trailing
  - Launch Date: 2020
  - Mission Lifetime: 5 years
  - Observation strategy:
    - Planet Detection
    - Planet Spectroscopy

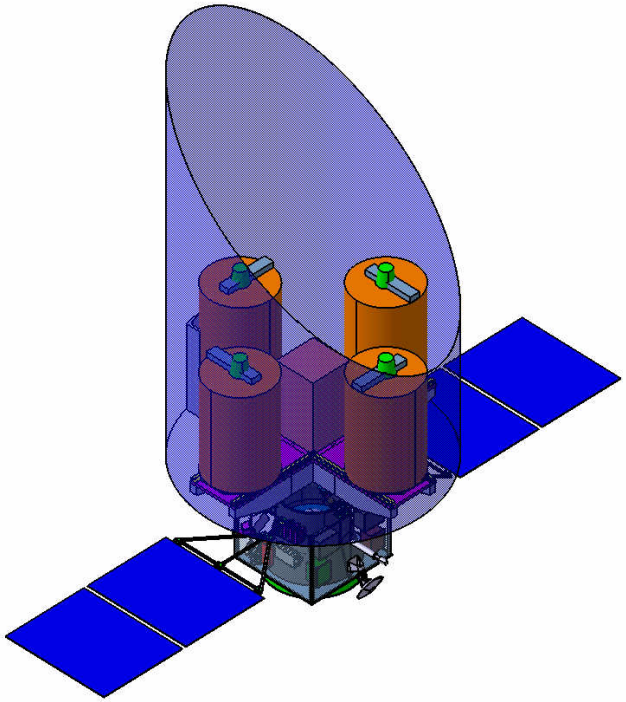

- Instrument Description
  - 4 element dilute aperture imaging interferometer using ("COTS" telescopes) on (Dual) Variable baselines
  - Dual nullers for deep and wide null with imager and (R=80) spectrometer
- Identify key Driving Requirements
  - Closest Inner Working Angle to maximize target stars
  - Integration time needed for detection by maximizing telescope collecting area
- Latest Team X mission study Cost Estimate for mission/instrument = $1.2B

DAVINCI

Combiner/Nuller Instrument

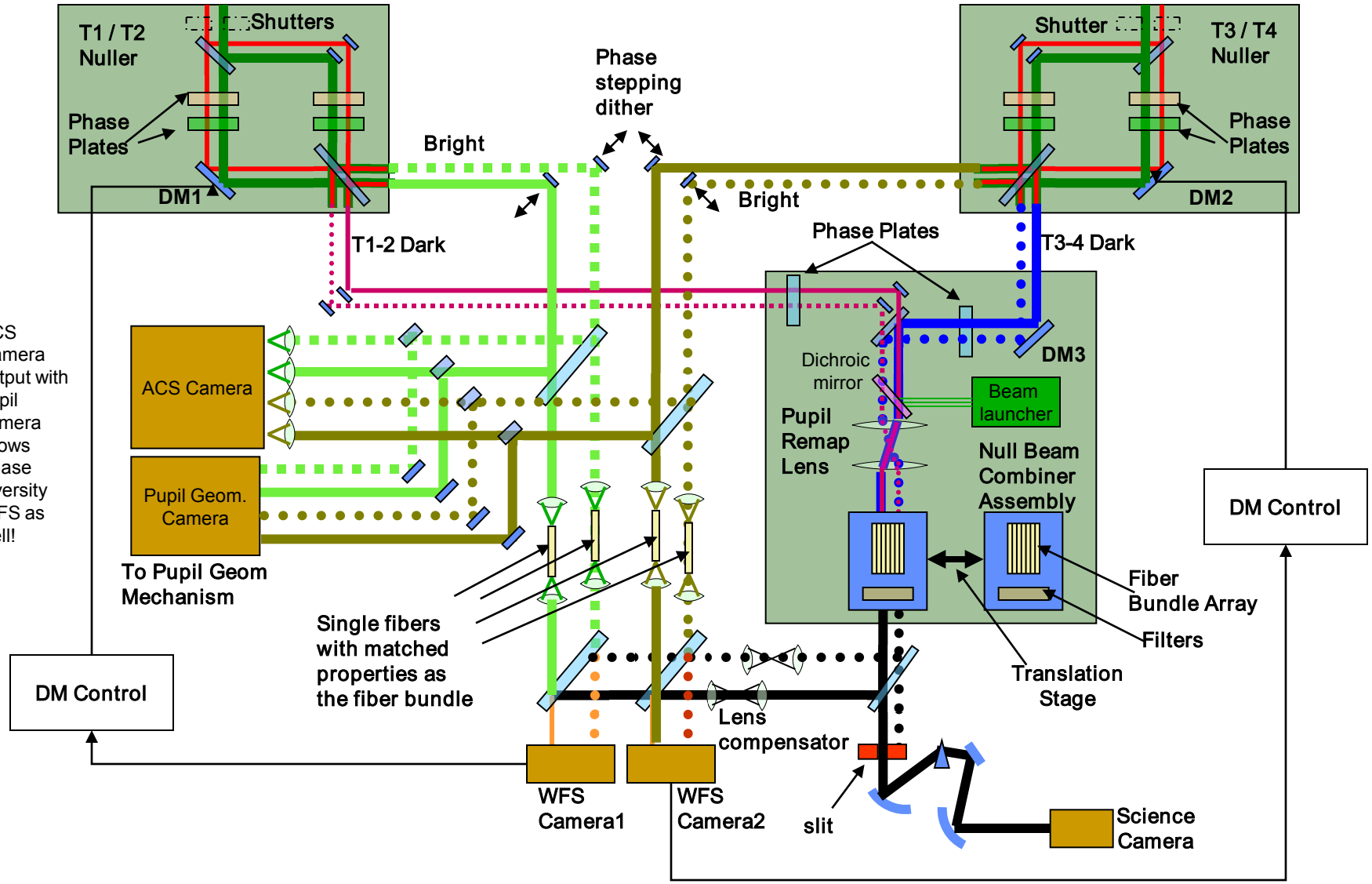

DAViNCI

DAViNCI Team X Cost (round 1)

June 2008 WBS Elements	FY 2008 M$ Corrected Team X In-house Build
DAViNCI 2008-06 (ABCDE with LV)	1,153.8
Phase A Total	7.1
Phase B Total	64.2
Phase C/D Total	855.6
Development Total Phase ABCD w/o LV	926.9
1.0 Project Management	18.8
2.0 Project System Engineering	22.1
3.0 Mission Assurance	25.6
4.0 Science	15.6
5.0 Payload System	392.8
6.0 Flight System	178.3
Spacecraft	178.3
7.0 Prepare for Mission Ops	14.8
9.0 Ground Data Systems	14.8
10.0 ATLO	24.6
11.0 Education and Public Outreach	1.0
12.0 Mission and Navigation Design	4.7
Reserves (ABCD)	213.9
Phase E Total	60.9
Upper Stage/SRM	-
8.0 Launch Vehicle	165.9

Team X Instrument Study 9/2008

	Model Estimate	
	NICM	Adjusted
Total Combiner	$ 152.1	$ 165.1
Management	$ 9.7	$ 10.5
Sys. Engrg.	$ 10.5	$ 11.4
Prod. Assurance	$ 5.6	$ 6.1
I & T	$ 13.3	$ 14.5
Total Sensor	$ 112.9	$ 122.6
Optics	$ 9.4	$ 18.8
Electronics	$ 14.6	$ 29.6
Structures	$ 14.4	$ 25.0
Thermal	$ 11.9	$ 14.2
Detectors	$ 51.0	$ 32.0
Software	$ 11.7	$ 3.0
Telescope		$ 126.0
Var Bas & Mnt Plate		$ 9.2
Sun Shade		$ 14.0
Management		$ 12.8
Sys. Engrg.		$ 13.9
Prod. Assurance		$ 7.5
I & T		$ 30.0
	Subtotal	$ 378.5

Telescope#1 $56M, #2,3,4 $23M/each

Project Cost	FY 2008 M$
Minimum	1,038.4
Expected	1,153.8
Maximum	1,384.5

DAViNCI

Technology Status/ Near Future Plans

- Define Starlight suppression versus Contrast
  - Starlight suppression of 10^{-7} = contrast of 10^{-10}, 10^{-9}
- Starlight suppression demonstration (in a single mode fiber, 2006)
- High Contrast demonstration (vacuum nuller with DM)
- Nuller/calibration interferometer architecture reduces thermal stability requirements of the telescope by ~ 100X.
- Goals of the Vac Nuller testbed

DAViNCI

Deep Laser Null 1.23×10^{-7} Suppression

- 8/22/06 R. Samuel.
- Experiment in vacuum chamber shut but at 1 Atm
- Rms vibration and drift over ~15 sec is ~60pm
- Amplitude fluctuations < 0.05%

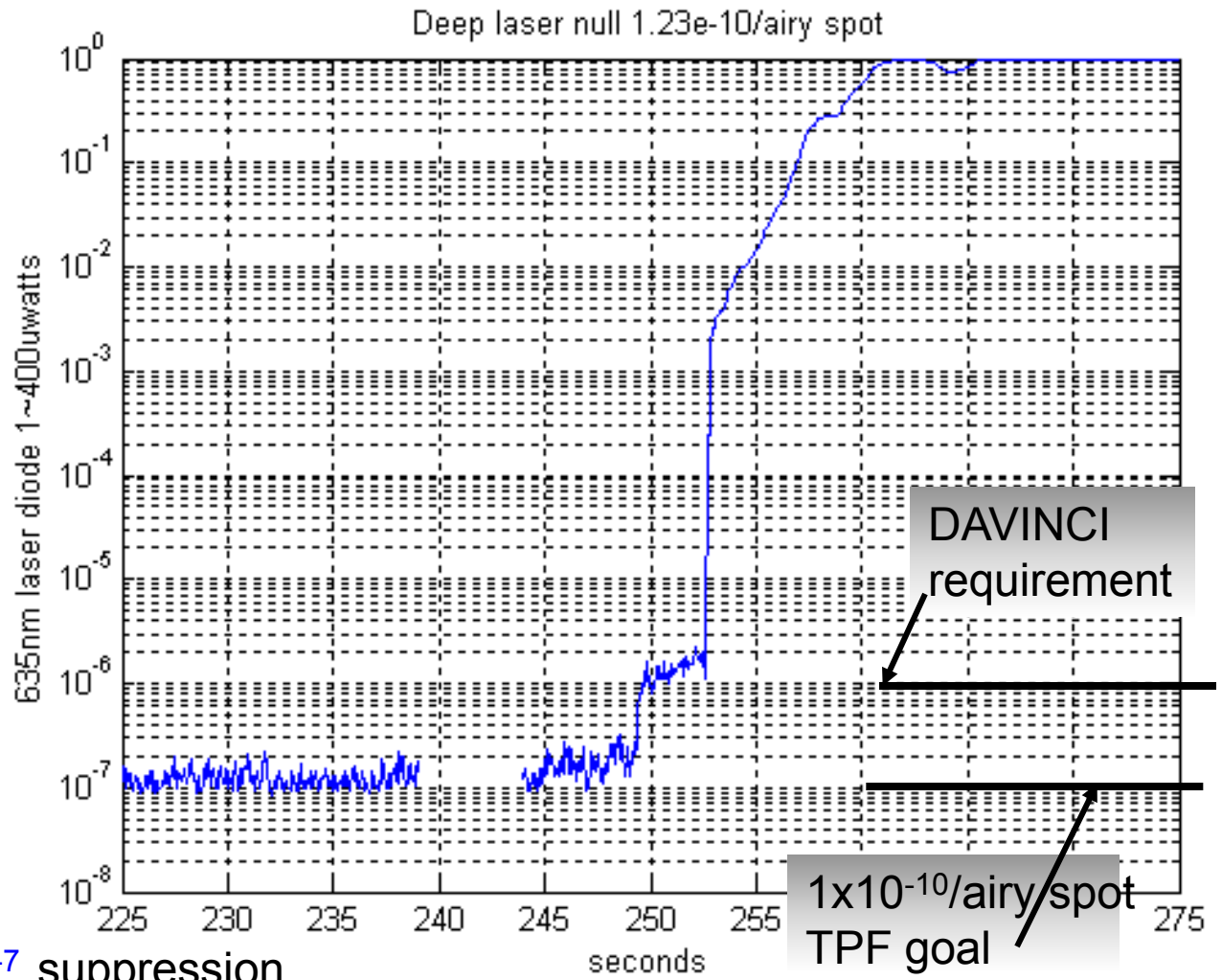

1.2×10^{-7} suppression
Needed for ~10^{-10} contrast

DAViNCI

Summary

- Dilute aperture concept advantages
  - Very high angular resolution (Small IWA, 35mas) in a small package
  - Search 160 stars for 1 Mearth @1AU (equiv), vs ~25 star. (star –planet > 1.2 IWA)
- Much much lower cost than a comparable 7-8m coronagraph working at 2 λ/D. (4 1.1m telescopes is less than 1 2.2m telescope, which is much cheaper than a 4m telescope, which in turn is much much cheaper than a 7~8m telescope.
- Technology progress prior to 2008 was seriously limited by available funding. But still showed 1e-7 suppression (2006) of laser light, needed for 1e-9~1e-10 contrast.
- Current technology effort off to a fast start. Demonstrate < 100pm wavefront measurement in Nov 08. Hope to have results to impact Decadal process.