FUNDAMENTAL NOISE-LIMITED OPTICAL PHASE LOCKING AT FEMTOWATT LIGHT LEVELS[1]

JOHN DICK, MEIRONG TU, KEVIN BIRNBAUM, DMITRY STREKALOV, AND NAN YU

Jet Propulsion Laboratory, California Institute of Technology, 4800 Oak Grove Dr. Pasadena, CA 91109, USA

We describe an optical phase lock loop (PLL) designed to recover an optical carrier at powers below one picowatt in a Deep Space optical transponder. Previous low power optical phase lock has been reported with powers down to about 1 pW. We report the demonstration and characterization of the optical phase locking at femtowatt levels. We achieved a phase slip rate below one cycle–slip/second at powers down to 60 femtowatts. This phase slip rate corresponds to a frequency stability of 1×10^{-14} at 1 s, a value better than any frequency standard available today for measuring times equal to a typical two–way delay between Earth and Mars. The PLL shows very robust stability at these power levels. We developed simulation software to optimize parameters of the second order PLL loop in the presence of laser flicker frequency noise and white phase (photon) noise, and verified the software with a white phase noise model by Viterbi. We also demonstrated precise Doppler tracking at femtowatt levels.

1. Introduction

Deep Space navigation and Radio Science today use microwave transponders on spacecraft together with ultra-stable clocks on the ground presently for ranging. To improve the ranging accuracy over the past decades, microwave frequencies have steadily increased, leading to the X/Ka transponders used in the Cassini Mission for navigation, ring and atmospheric occultation experiments, and a search for gravitational waves. An obvious advantage of higher frequency is the reduction of diffractive losses on both earth-based and spacecraft-based antennas due to the shorter wavelength. Just as important, however, is a markedly increased immunity of higher frequency electromagnetic radiation to effects of the (ionized and unstable) solar wind. The culmination of this progression would be an "optical transponder" using light at optical wavelengths to provide a dramatic improvement in ranging performance compared to any microwave transponder [1].

We report here on the results of experiments, calculations and demonstrations designed to establish the feasibility of a Deep Space coherent optical transponder based on an optical phase locked loop (PLL) scheme. To meet the Deep Space application needs, such optical PLL will have to operate at extremely low light levels. As an example consider spacecraft for a Mars Mission, where the farthest distance from Earth is approximately 2.5 AU. For such a mission, and for base- and spacecraft-antennas of 1 meter and 10 cm diameters, respectively, a 5-Watt transmitter requires operation with received powers of 100 fW or below. To our knowledge, optical phase lock loop has not been demonstrated or characterized at femto-watt level. In this paper, we have modeled, developed and tested optical PLL's that operate at pico-watt and femto-Watt power levels. The excellent performance obtained; that is, low cycle-slip rates at very low optical power levels make the PLL-based optical transponder an attractive prospect for Deep Space Spacecraft. Implemented in a Mars Mission, an optical transponder could increase both ranging and Doppler accuracies by more than 10× compared to present technology, while reducing acquisition time by ≈ 100.

2. Laser Noise Characterization

In order to model and optimize the optical PLL at low powers, it is necessary to understand the noise characteristics of lasers used. We used 1550 nm fiber lasers in our experiments. The goal is to achieve near shot-noise limited PLL performance at femto-Watt light level.

In the presence of only shot noise, cycle-slips in a PLL can be reduced to any desired level by reducing the loop bandwidth [2]. However, with a free-running laser local oscillator (LO), optical PLL performance at the lowest possible optical power levels is always limited by

[*] This research was carried out at the Jet Propulsion Laboratory, California Institute of Technology, under a contract with the National Aeronautics and Space Administration. Copyright 2008 California Institute of Technology.

the presence of low-frequency laser noise. This noise is typically white-frequency or flicker-frequency noise, which, with $1/f^2$ or $1/f^3$ spectra (respectively) at low frequency offsets, eventually dominates any shot noise value as the frequency is lowered. What this means for phase locking is that narrowing of the loop bandwidth fails at some point to improve the cycle-slip rate, and furthermore, that the rate will in fact increase if the bandwidth is further narrowed. Thus, a detailed knowledge of the laser phase noise is necessary in order to predict and optimize low power PLL performance with any real laser.

The test setup for phase noise measurements is shown in Figure 1. All measurements were obtained in a closed-loop setup for stability and reproducibility. The phase locked loop is a combination of RF and optical circuitry, after detection of a heterodyne of the weak signal with an added LO signal at about 100 MHz, the detected signal is phase locked to a synthesized signal by means of PLL circuitry that combines a second-order loop with variable parameters which is used in a fast loop that controls the frequency of an approximately 100 MHz VCO driving an acousto-optic modulator (AOM), and whose action is complemented by a very slow loop controlling the piezo frequency control incorporated into the laser.

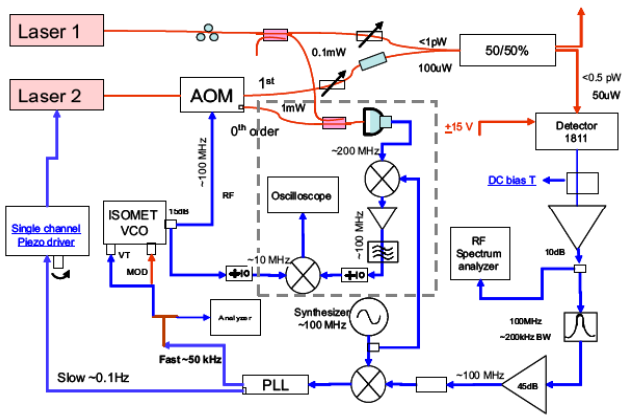

Figure 1. Block diagram of the general measurement test setup. Phase noise data is typically obtained from the "Analyzer" signal, while components in the dashed box are added in order to measure cycle–slips and their associated phase noise.

A summary of our laser phase noise characterization results is shown in Figure 2. The phase noise measurement at high laser power (green curve) shows a spectral density of phase fluctuations $S_\phi(f) \propto 1/f^3$ over a wide frequency range: The lower frequency results were measured as frequency fluctuations in a closed-loop setup with a relatively high loop bandwidth while the higher frequency curve were measured as phase fluctuations with a narrow loop bandwidth-effectively an open-loop setup. A straight-line value $S_\phi(f) = 60\ \text{dB/Hz} \times (1\text{Hz}/f)^3$ derived from this plot was used in our PLL simulations as the 2-laser phase noise. As will be shown later, simulations based this model gave good agreement with experimental phase-slip measurements. By integrating the phase noise, we obtain

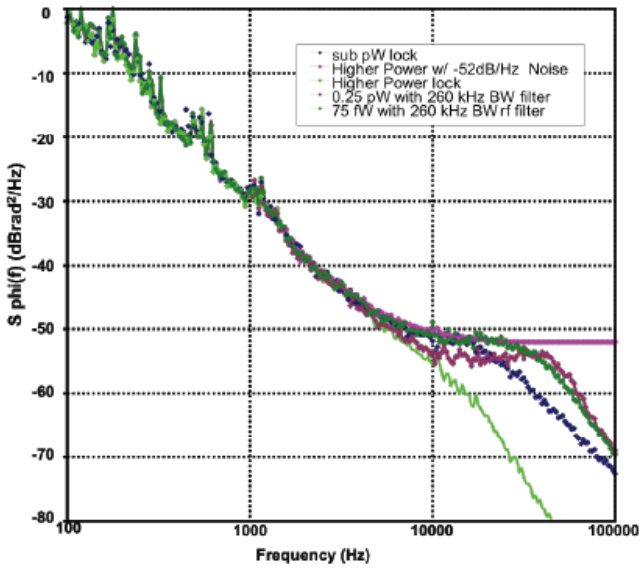

a short-term laser linewidth of 2.8 kHz for a measuring time of 10 ms.

Figure 2. Measured phase noise for two fiber lasers. The data were combination of in- and out of loop measurements. The light green curve shows high power measurements when the laser phase noise dominating all measurement band. Measured phase noise at very low power showing the onset of shot noise. The -52 dB rad^2/Hz apparent asymptote for the 75 pW curve is just 6.5 dB above the theoretical value of -58.5 dB rad^2/Hz for that power level. Typical values obtained were 4 to 6 dB above the theoretical shot noise value.

By reducing the power of Laser 1 into the detector, we can start seeing an addition of a constant value at the high frequency side to the curve in Figure 2. This constant noise floor is due to the shot noise of the laser. Calibrating the laser power and the noise floor observed at 75 fW, we conclude that the measured S/N is 6.5 dB poorer than the shot noise limit, This loss is primarily due to detector inefficiency and optical mismatch in the detector between the LO (heterodyne) signal and the weak 75~pW signal.

Our choice of an approximately 100 MHz heterodyne frequency for the optical PLL setups in Figure 1 is largely driven by amplitude noise (RIN) in our lasers noise. Figure 3 shows a plot of the measured RIN noise spectrum. The figure shows that the RIN noise is substantially sensitive to laser operation parameters, so that (e.g.) the 50 μW LO signal will have more RIN noise if it is derived from a 4~mW laser output than a similar signal derived from a higher laser output of 6 mW. We typically operate the lasers at an output level of 17 mW for best noise and stability performance.

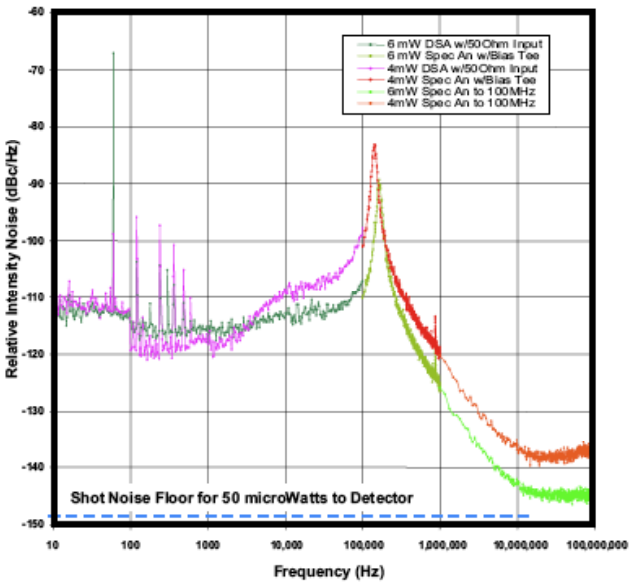

Figure 3. Relative Intensity Noise (RIN) for one laser. Notice that the peak near 100 kHz shifts with laser power. The approach to shot–noise limited performance between 20 MHz and 100 MHz points to this region for offset (heterodyne) and subcarrier frequencies. For this reason all phase–lock experiments were conducted with an injected signal that was offset by 50 MHz to 100 MHz.

While it is possible to reject RIN noise in the injected LO (heterodyne) signal to a substantial degree by the use of balanced and complementary phase detectors, achieving shot noise-limited performance is made easier by the use of a single high-quality optical detector. Amplitude noise is also nominally rejected by our RF mixer phase detector, but only by 20 dB or so. We have found that the RIN noise approaches the shot noise value for higher power outputs from the fiber laser at frequencies above about 50 MHz. Therefore, the 100 MHz heterodyne frequency is used.

3. Optical Phase Locking

In the low power phase lock loop, it is critical to optimize the loop performance. This requires not only the understanding of the laser noise behavior, but also the level of loop performance. One of the special issues of low SNR in a PLL is the cycle slip phenomenon. The phase noise fluctuation inside the loop bandwidth has a finite chance of being greater than π when the loop will jump lock to the next fringe, thus a cycle slip [2].

We have developed software that simulates PLL operation in the face of the various noise processes present in our system. PLL performance limitations due to photon shot noise has been previously studied by [2] for a first order phase-lock loop. Somewhat poorer results for a second order loop have also been reported. Because the fiber lasers used show flicker-frequency noise with a $1/f^3$ power spectrum over much of the frequency range, a second order loop is required, and the optimization of such a system for the lowest possible level of cycle-slips has not been previously reported. We verified the operation of our software by recovering the Viterbi result, and also found good agreement with LISA Project calculations for their NPRO lasers (which typically show “white frequency" noise with a $1/f^2$ power spectrum [3]).

A typical software run involved generating 1-4 million random phase variations with the various noise models required. For any given shot-noise level, the simulation allowed the first- and second-order loop parameters to be optimized so as to minimize the cycle-slip rate. Additionally, the highest possible shot-noise level for an optimized loop could be determined for any give cycle-slip rate. The results shown in Figure 4 have been optimized by adjustment of the loop parameters for a cycle-slip rate of 1.0 (per second), and indicate that this rate can be achieved with a shot noise level of -51 dB rad^2/Hz; which with a perfect (shot-noise limited) optical detector and an ideal RF system would correspond to a power level of 13 fW (at an optical wavelength of 1550 nm).

In addition to the “white" and “flicker frequency" noise processes shown in Figure 4, a small amount of “random walk frequency" noise with a $1/f^4$ spectrum was also added, in an amount too small to be seen on the graph; without such an added noise the simulated PLL would never actually “lose lock", behavior that is typically (and often) seen in the laboratory.

The block diagram of the experimental setup for the low power phase locking is shown in Figure 1. Phase noise data characterizing the cycle slips were measured at the "Oscilloscope" port in the figure; a comparison of a high-power phase reference signal at the right side of the dashed box with the phase-locked signal from the left. Both (approximately 100 MHz) signals are divided in frequency by a factor of 10, the output of the two dividers being square-wave signals at approximately 10 MHz. Combining these two signals in a double-balanced mixer gives a dc level that shows a triangle-wave dependence on the phase between the two input signals; with 5 cycles up and 5 cycles down as the differential phase varies by many cycles. We assume that cycle slips are random in direction, and so the sign inversion of the slope of the triangular mixer output every 5 cycles should not impact the measured noise values. However, there is a small (5%) correction that must be applied due to missed phase jumps at the turn-around points of this waveform.

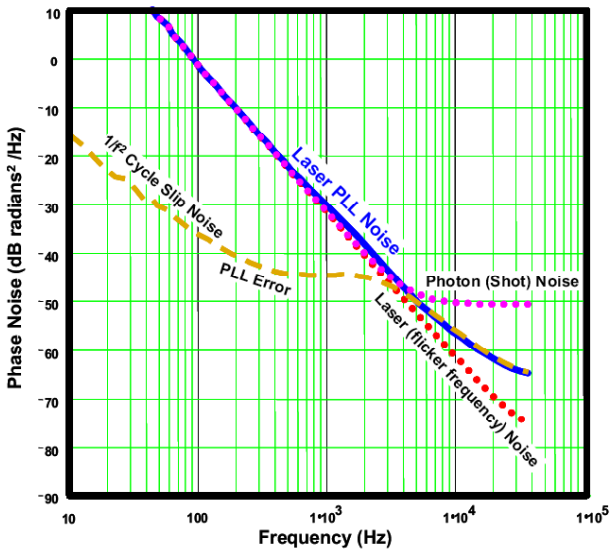

Figure 4. Simulation calculation of PLL performance optimized for the highest possible shot noise level (-51 dB/Hz) that allows a cycle slip rate of 1 cycle–slip per second as shown by a ~ $2/f^2$ (/Hz) noise contribution to the PLL error signal. The +60 dB $/f^3$ flicker frequency noise imposed on the PLL simulation well matches the (two laser) measured noise values.

In actual experiment, we have been able to achieve optical phase lock with actual optical power into the optical (heterodyne) detector of 40 fW, with no more than 1 cycle-slip per second. Previous work in support of the ASTROD [4,5] space mission study has reported optical PLL operation at powers down to ~2 pW. In Figure 5 we show a comparison between laboratory measurements at 300 fW optical power and the results of simulations as the loop gain is varied. While an increase in phase-slips with increasing gain may seem counterintuitive, these plots are qualitatively similar to

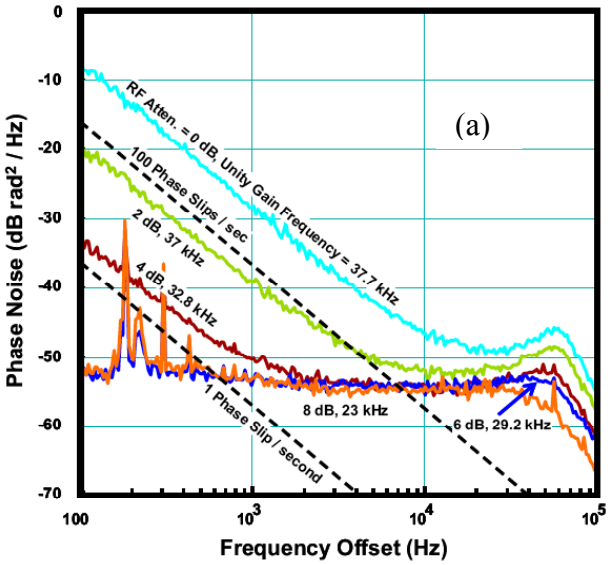

the results of Viterbi-with the onset of phase slips occurring as the integrated phase noise within the loop bandwidth becomes greater than 1 radian^2. The simulations were chosen to match the observed unity gain frequency of 29 kHz at the lowest gain values (8 dB attenuation). A comparison of the data with the simulation calculation shows excellent agreement for the onset of phase slips, both occurring at the "4 dB" attenuation level, and with nearly identical values.

Figure 5. (a) Measured phase noise in the optical PLL, showing the onset of cycle–slips with varying loop gain for an optical power of 300 fW into the detector. (b) Simulation calculation of PLL cycle slip phase noise due to shot noise at -55.5 dB (rad^2/Hz) for loop gains (and unity gain frequencies) comparable to the experimental tests. Lines for several phase slip rates are indicated for each graph.

As the RF attenuation is reduced and the loop gain increased by this same factor, the observed unity gain frequency in the simulations scales roughly with this

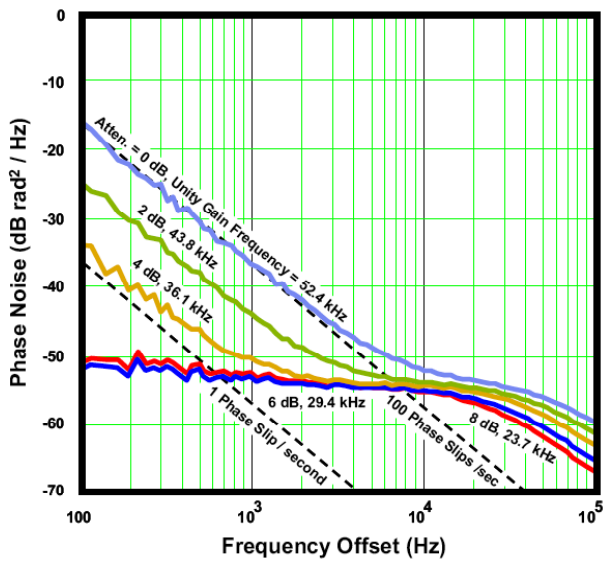

gain value, while for our measurements the unity gain frequency saturates at a value of about 38 kHz, with the data also showing increasing cycle-slip rates, compared to the simulation. We believe this discrepancy is due to the unmodeled RIN noise peak that can be seen at about 75 kHz for the higher gain values in Figure 5(a). These peaks showed strongly in the RF spectrum at higher gains, and gave rise to significant carrier reduction in the RF spectrum for the high gain values.

We expect that the utility of this technology will be at cycle slip rates of 1/second or lower where the impact of the RIN noise is small. This being so, the loop performance is practically equal to the theoretical prediction. Thus, while PLL performance is certainly limited by the $1/f^3$ laser phase noise, it is not practically impacted by the presence of laser RIN noise.

4. Doppler Ranging Demonstration

In addition to the PLL performance investigation, we have also performed several demonstration experiments that are designed to show that high performance can be obtained with the kind of time-varying range that a deep space transponder would face. Of course, we can't achieve space velocities in the laboratory, but we can achieve accelerations comparable to those experienced by spacecraft, and it is these higher order variations of phase that place significant burden on the optical PLL circuit.

Figure 6 shows the setup for a free space demonstration experiment that used an air track together with a corner-cube optical mirror to give excellent and stable optical performance together with large mechanical motion. The corner-cube reflector was found to be necessary in order to obtain good optical performance. Coiled springs allowed accelerations up to 0.3 g to be obtained. This setup succeeded in transferring 30% of the optical power from the source fiber to the output fiber, with a typical variation of 5% due to motion of the reflector.

In initial tests at 1 pW input power, the PLL transponder showed no evidence of cycle-slips when tested with free-space input from a movable corner-cube reflector mounted on an air track with springs for a period of ~1 Hz and path variation of ~1 m; conditions that simulate the acceleration (and associated Doppler rate) for typical orbits. These experiments were done without the use of predicts or feedforward that would be available in actual use. In these tests, the PLL phase variation was less that 0.8 radians with mirror motion of 4×10^6 radians.

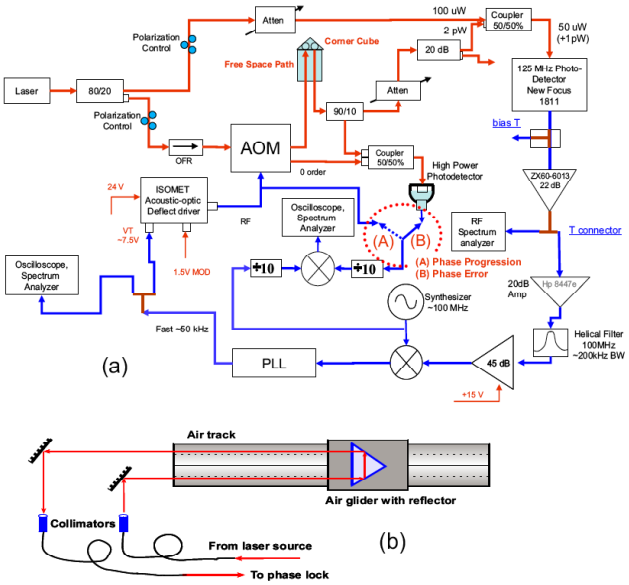

Figure 6. Details of the setup for free space measurements using a moveable corner–cube reflector on an air track. (a) Block diagram of the electro-optical setup; and (b) block diagram of the corner–cube setup.

A second demonstration experiment measured Doppler and Doppler errors at very low optical power (150 fW) using the moving mirror and air track, but without the springs. For this experiment the mirror moved at a relative smooth manner, bouncing from short springs at the ends.

High- and low-power Doppler measurements were obtained by simultaneously arming two counters. The raw data for both counters, showing the variation in Doppler frequency as the mirror traversed the air track for ≈7 out and back trips. A slight tilt to the track gave rise to the periodic velocity variation in the data. In addition, small variation can be seen between the two channels at the ends where the velocity reversed.

Figure 7 shows the difference between the high- and low-power Doppler signals, showing an RMS variation of 0.2 Hz for the one-second measurements. This corresponds to an optical frequency variation of about $\sigma_y(1s) \approx 1\times10^{-15}$, a value roughly comparable to the short-term frequency stability of the best optical frequency standards today.

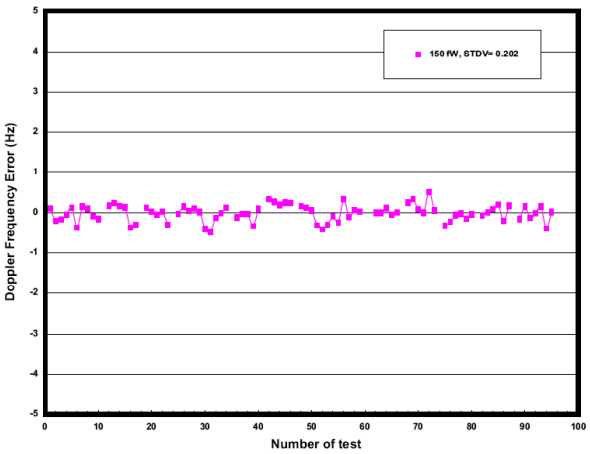

Figure 7. High-resolution data for the difference between the high- and low-power Doppler measurements in the counters. The RMS variation of the points is approximately 0.2 cycles, which for an optical frequency of 2×10^{14} Hz, corresponds to an optical frequency stability of approximately 1×10^{-15}.

5. Summary

Optical phase lock loops have been demonstrated for the first time at femto-Watt power levels. The optimized performance was enabled by development of a calculational methodology that simulated phase lock operation in the presence of realistic noise models for the laser, so that optimal loop parameters could be ascertained. Low cycle-slip rates have been demonstrated at power levels as low as 40 femto-Watts, and observed cycle-slip rates were found to be in good agreement with calculated values. Several demonstration experiments were performed using an air-track glider and a corner-cube optical reflector with approximately 1 meter of free movement. Low power phase lock was preserved with up to 0.3 g acceleration of the moving mirror, and Doppler accuracy of 0.2 cycles was demonstrated, corresponding to a stability for optical Doppler frequency measurements of 1×10^{-15}. The results suggest potential performance improvements in Deep Space ranging by the use of a coherent optical transponder.

Acknowledgments

The authors would like to thank Ertan Salik for helpful discussions.

References

1. P.W. Kinman, R.M. Gagliardi "Doppler and range determination for deep space vehicles using active optical transponders" Applied Optics, V. 27, 4487–4493 (1988).
2. Chapter "Phase–locked–loop behavior in the presence of noise," in Principles of Coherent Communication, by A.J. Viterbi (McGraw–Hill, 1966), pp. 77–120.
3. Robert Spero, JPL, Private Communication.
4. W.-T. Ni "ASTROD (Astrodynamical Space Test of Relativity using Optical Devices) and ASTROD I" Nucl. Phys. B (Proc. Suppl.) V. 166, 153–158 (2007).
5. A.-C. Liao, W.-T. Ni, J.-T. Shy, "Pico–Watt and Femto–Watt Weak–Light Phase Locking" Int. J. Mod. Phys. D, V. 11, 1075–1085 (2002).