A Few Examples of Spacecraft Anomalies Attributed to Transient Voltages and Currents Issues.

Ray Perez
Jet Propulsion Laboratory
Pasadena, CA 91109
reinaldo.j.perez@jpl.nasa.gov

Abstract

It is easy to address voltage and current transient related issues when the hardware in question or similar type of hardware is always available to you and when such issues are deterministic in nature. Unexpected or unforeseen transient related problems are not always a challenge but become a severe concern when a unique piece of the hardware, which developed the problem, is in space; as it is with all satellites. This paper addresses in a qualitative manner, a few examples of voltage and current events of transient origin which disabled space hardware.

Introduction

The purpose of this work is to introduce a few examples of where transient related problems have caused the disabling or loss of spacecraft vehicles over the last ten years. The approach is qualitative in nature only, since there is not enough space to address all the technical details (could be future work). The transient phenomena in question are all of transient current/voltage nature; hence, they are difficult to diagnose, difficult to test for, difficult to foresee, and difficult to reproduce. Due to all these difficulties in assessing the phenomena in a timely manner (in most cases the hardware is out in space), the failures associated with such phenomena are often called unverified failures. Eventually, corrective actions in the form of design changes (or changes on how we test things) are implemented after reviews and analysis of the problems are performed.

The following examples are outlined in narrative manner. I describe the problems, the causes of the problem (and its transients nature) and possible solutions taken later.

1.0 Pyrotechnics and Current Transient Issues.

Explosive devices (pyros) are highly efficient, easily controlled, and can be readily stored. However, several anomalies occurred when pyros were turned on:

1. A science mission ended during the first orbit when its infrared telescope cover was unintentionally ejected, causing the loss of all cryogen (1999).
2. Three satellites, one for Earth observation, one for communication, and one for science, failed due to propulsion-system ruptures induced by pyros. A propulsive valve on a fourth similarly failed on ground (early 1990s).
3. An interplanetary probe almost fatally failed when the firing of a pyro initiator caused a

voltage surge and induced a latch-up in the redundant memory board. The mission would have ended if the primary memory board had been affected (1989).

The telescope cover was ejected because a controller FPGA took a few milliseconds to warm up, during which a transient was generated [1]. The designer did not take this known problem into account, and the design was not reviewed. Ground test failed to catch the flaw because a lab power supply was used, and its slower power rise time masked the transient. In flight, a relay applied power in two milliseconds, allowing the spurious firing to occur.

Pyro firing circuits typically consists of relay circuits or two series FET (to protect against a shorted FET scenario) circuits which provide a current source to NSI (NASA standard initiators) devices in order to activate a "pyro event" which will actuate an electromechanical device to perform a given function. The source current for pyro circuits is usually provided by a stable and constant power source such as a spacecraft battery. The pyro circuits are often used on mechanical retention and release mechanisms as well as valves (to open a valve or to close a valve) in a propulsion subsystem. The pyro circuits (whether relays or FETs) are actually activated through driver circuits responsible for either turning-on or turning-off the given pyro circuit. The driver circuits are powered by a regulated power supply. The driver circuits are commanded by the Command and Data Handling subsystem of the spacecraft using FPGAs. Spurious transients in such FPGA outputs can inadvertently command pyro devices. Therefore, it is important that steps be taken to avoid commanding multiple relays within a given pyro circuit, at the same time. One of the techniques that is often used is to design pyro circuits such that an enable command and a fire command must both be needed to activate such a pyro circuit. The enable command and the fire command will come from two different FPGA with a delay built in between the enable and the fire commands coming from both FPGA. Figure 1 shows a typical pyro circuit of a power initiator unit.

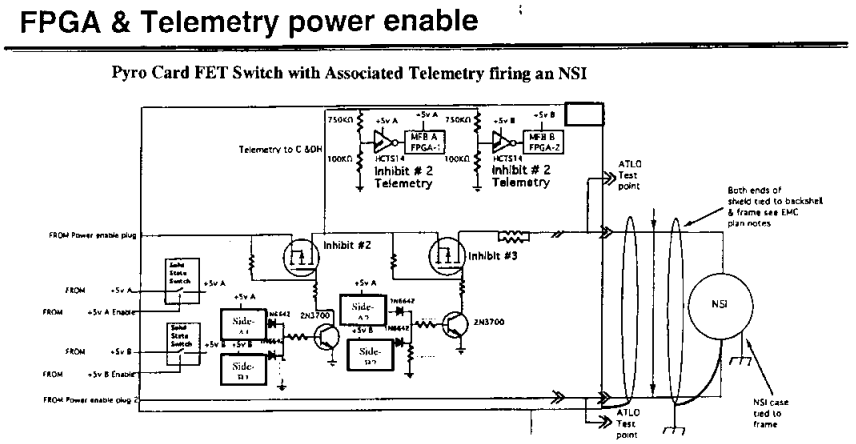

Figure 1. Pyro Firing Unit unto an NSI

2.0 High Electric Field Effects on Thrusters O-Rings

Valves in propulsion assemblies are often tested for leaks. The test is performed using high pressure helium gas (>480 psi) which is forced to pass through a text fixture made up of a valve and a thruster assembly connected together. During one of such test helium bubbles were observed at the valve-to-thruster O-ring seats, which was a clear indication of a failed leak test. It is believe the ring got dislodged due to the electric field effects. Leaks can cause severe risks of propellant explosions and destruction of propulsion assemblies in satellites.

Further analysis showed that an electric arc between the valve outlet bore and the thruster injector stem occurred during the test thermocouple installation event.

There is a need to provide a better electrical ground path for either the valve body or the thruster body. The recommended ground location for thruster spot welds is as close to the thrust chamber as possible. The recommended ground location for the valve body is at the braided shield lug weld location. Proper grounding of the valve and thruster will eliminate the electric field and prevent possible fuel leakage resulting from a damage outlet bore.

3.0 Design Satellites to Withstand Space Weather ESD Induced Events

The space environment has caused hundreds of on-orbit anomalies, including:

- A military satellite lost power to its communications subsystem suddenly (1973).
- A weather satellite lost its primary instrument (1982).
- A foreign weather satellite lost attitude control (1988).
- A foreign communication satellite found its solar cells severely damaged (1991).
- A foreign commercial satellite was disabled for seven months after both reaction wheels failed (1994).
- A foreign communication satellite lost power (1997).
- A foreign science satellite was abandoned when increased atmospheric drag overpowered the attitude control system (2000).

The principal space weather hazards involve geomagnetic storms, which are stirred up when large numbers of solar particles hit the Earth's magnetic field [2]. Storms can trigger an electrostatic discharge (ESD) in the spacecraft: all failures cited above except the last one involved ESDs.

Space weather hazards are often thought as mainly driven by the 11-year solar cycles. For example, there was extensive "satellite-killer" hype in the media in 2000 because one cycle peaked late that year. Conversely, some people associate periods of low solar activities with minimal weather hazards.

This belief is unfounded since space weather hazards and solar activity only marginally correlate. Geomagnetic storms can occur anytime, not just during the height of the solar cycles. Satellites can thus fail during valleys of solar cycle as easily as during peaks. Moreover, all storm prediction efforts, including new spacecraft designed to monitor solar activities, have been unsuccessful so far, and satellite operators cannot count on being forewarned of weather threats. Figure 2 show the lack

of correlation between solar max and the time at which the aforementioned failures occurred.

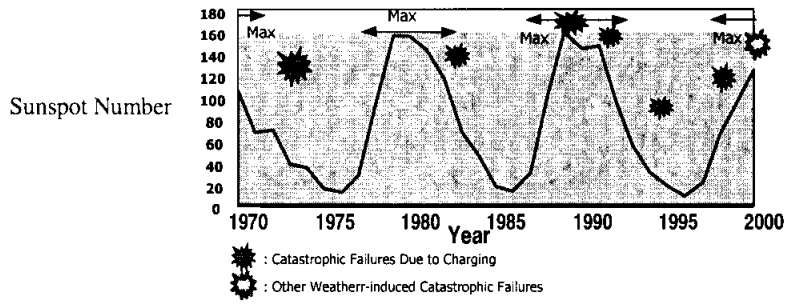

Figure 2. Space Weather Solar max and Min

4.0 Tin Whiskers Cause Electrical Shorts

During the period May-July 1998, one or more of the redundant spacecraft control processors (SCPs) failed in each of three commercial communications satellites. This resulted in one of the satellites being removed from service. Three SCP failures were attributed to intermittent or continuous short circuits caused by the growth of conductive filaments, known as "tin whiskers," from the tin-plated surface of an electronic assembly or its cover.

Although well known in the past, these recent failures have reminded the space community of the potential risks associated with the use of pure tin-plated finishes on electronic components and assemblies. While pure tin protective coatings are favored by the electronics industry because of their material properties and cost, they are susceptible to the spontaneous growth of single crystal structures -- tin whiskers. Growth occurs with pure tin plating in the presence of applied electric field and in vacuum. It may begin soon after plating or may take years to initiate. Tin whiskers are capable of causing electrical failures ranging from parametric deviations to catastrophic short circuits. "Bright" pure tin plating has been found to be particularly susceptible to whisker growth [3].

Figure 3. Tin whiskers between two pins in an IC

Tin whiskers may grow spontaneously to more than 4 mm in length. The filaments can typically carry 25-50 mA of current, or 1 amp for a short period (a transient event) before it opens, though some do not open.

5.0 Transient Effects of Hall Effects Sensors

A Mars lander mission failed on touch down in 1999. A failure review board postulated several possible failures but a predominant failure was attributed to a software "misinterpretation" of a glitch caused by the touch down hall effect sensors (mis-interpreted the "glitch" as touch down) which caused the main descent engine cut-off over 40m before actual touch down [4].

Subsequent to the failure, lander spacecraft leg deployment tests showed that during a leg deployment, small pulses > 10 mSec were observed coming out of the output of the touch down sensors. Since the flight software was sampling the output of the touch down sensor at 10 mSec it could have easily interpreted this phenomena as touch down and cut-off thruster power. This supposedly happened at 40m before touch down resulting in the crash of the Mars lander spacecraft (of course this was one of the possible failure scenarios for the Mars lander mission). Lessons learned have been written to account for all known hardware operational characteristics, including transients and spurious signals, and how they must be reflected in the software requirements [5].

The following discussion outlines a possible scenario of the failure cause and it is based on this author's own analysis and opinions. The touch down sensor in the landers are Hall effect sensors. Hall effect sensors have been around for a while and they are used as electro-mechanical devices. As shown in Figure (4a) the Hall effects is described as the voltage output (in the form of a pulse) resulting when a current source interacts with a magnetic filed. The magnetic field B is supplied by a magnet. The current source is supplied by an internal current source within the Hall sensor fed by an external Vcc. The voltage output V_H (H for Hall) is in the form of a pulse lasting several milliseconds.

Hall Effect Configuration in the 1999 Mars Lander Mission.

The magnet which provides the magnetic field "moves" mechanically when it gets close enough to the sensor, its magnetic field is strong enough to activate the Hall effect sensor. The motion of the magnet is caused by a force. This force is supposed to be the touch-down force. As shown in Figure (4b), there are basically two configurations concerning this force and the motion of the magnet. In one configuration the magnet stays fix and a ferromagnetic shield moves as a result of the force. This shield prevents the B-field from interacting with the Hall effect sensor while the shield stays stationary; a force however, can remove this shield and make that interaction possible. In the second case there is no ferromagnetic shield, it is the magnet itself that moves as a result of a force. It is my understanding that this second method is less reliable, and by that I mean it is "too sensitive." The hall sensor used in the landers is the Optek OMH3040. According to the specification sheets, a movement of the magnet of just 3.8mm can cause the hall sensor to be activated. This motion will cause the B-field to go from 115gauss to 150 gauss a magnetic hysteresis effect of about B_{hys} = 150-115 = 35 gauss (typical); which is really sensitive. The vendor claims the worst case hysteresis is only 60 gauss I believe is still too sensitive for this

application. Other hall sensors have calibrated hysteresis such that it can be increased up to 400 gauss.

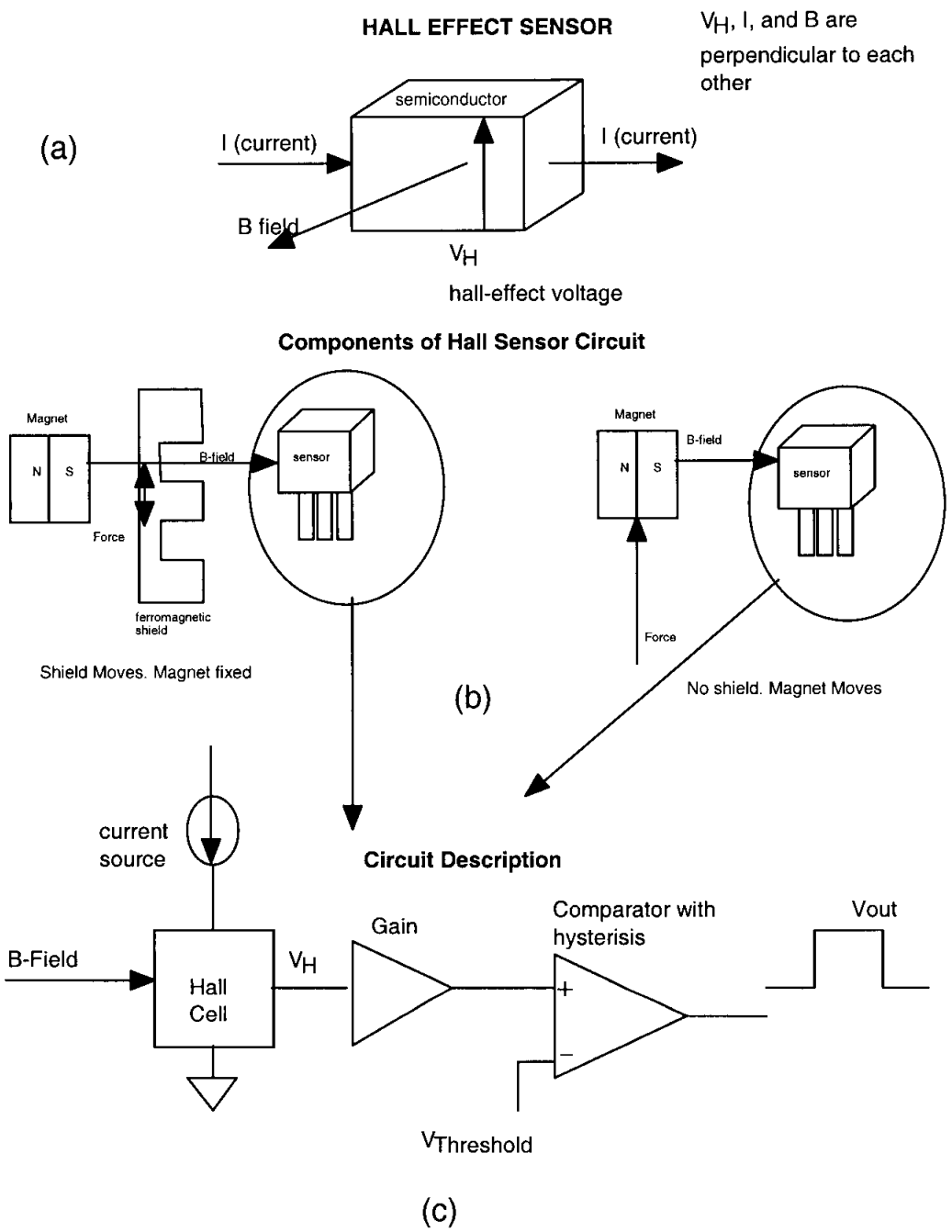

Figures. (4a) The Hall effect, (4b) Basic configurations of the Hall sensor, (4c) Simple electronics of a Hall sensor.

At the time of the failure, one hypothesis indicated, that the lander leg deployment could have introduced noise in the touch down sensor. A more plausible hypothesis is that the deployment of

the lander leg or any other possible dynamic shock in EDL (they are all suspect) could have cause the magnet to have experience a "momentary motion" (it only takes 3.8 mm) in the magnet and activate the sensor itself. Figure (4c) shows an electrical block diagram of a typical hall sensor.

Conclusion

We have shown a few examples where voltage and current events of a transient nature can cause failures at the system level. The severity of the failure is not related to the magnitude of the transient problem but rather where such transient events occur within the hardware. It is often not what you think will be the largest concern from the hardware point of view, but the small and unexpected issues which tend to be the real problem.

References:

[1] NASA Lessons Learned Data Base (LLIS Dataase), Lesson Number 0640, October, 21, 1999 by M. Landano/R.Ross and D. Oberhettinger.

[2] "The charging of spacecraft surfaces" , Garret, H. B, Reviews of Geophysics and Space Physics. Vol. 19, pp. 577-616. Nov. 1981.

[3] "Tin Plating, Whisker Growth," GIDEP Alert No. AAN-U-00-11, January 4, 2000.

[4] Report on the Mars Polar Lander and Deep Space 2 Missions, JPL Special Review Board (Casani Report), JPL Internal Document D-18709, March 22, 2000.

[5] NASA Lessons Learned Knowledge Network, Lesson Number 0938, February 15, 2001, submitted by David A. Nichols.