Orbiting GPS Receiver Modified to Track New L2C Signal

Tom K. Meehan, David Robison,
Tim N. Munson, and Larry E. Young
Jet Propulsion Laboratory
4800 Oak Grove Drive
Pasadena, CA 91109-8099
Stephen Stoyanov
ITT Space Systems Division
100 Kingsland Road
Clifton, NJ 07014

Abstract-The L2C signal is a great step forward for civil applications of GPS, enabling high-accuracy dual-frequency measurements. Engineers from the Jet Propulsion Laboratory and ITT teamed to reprogram FPGA firmware and add tracking software on an orbiting receiver to track the new GPS L2C signal from SAC-C. SAC-C is an Argentinean science satellite and was launched in November 2000 with a BlackJack GPS receiver. This is a dual-frequency digital receiver with 48 tracking channels and four antennas. On SAC-C, it provides precise orbits, atmospheric occultation data, tests of GPS surface reflections, and serves as an orbiting test bed for new GPS development such as the L2C tracking reported here.

1. INTRODUCTION

Until 21 October 2005, GPS satellites broadcast CA codes at L1 (1575.42 MHz), and P(Y) codes at both L1 and L2 frequencies. Since 31 January 1994, P(Y) codes have been encrypted. Some GPS users required the high-accuracy to be obtained from dual-frequency signals, but were not authorized access to the P(Y) codes. Codeless, or code-enhanced processing techniques were developed to allow the P(Y) signals to be tracked without knowledge of the codes [1,2,3]. These techniques have all involved compromises. In particular, the Signal to Noise Ratio (SNR) is less using codeless processing.

On 21 October 2005, we tracked the first transmission of the L2C signal (SVN 53, PRN 17) using a BlackJack receiver at JPL, and we later tracked the signal from a BlackJack receiver in space. The L2C signal [4] is at the L2 frequency, but is not encrypted, which allows civil receivers to receive the full signal SNR. It has additional advantages, such as a signal component that is not modulated by data bits, which allows enhanced signal acquisition and tracking at low SNR. This helps all users to some extent. For example, a satellite borne occultation receiver must acquire and track signals that have been greatly attenuated by atmospheric defocusing. With L2C in addition to the CA code at L1, science receivers can benefit from using the codes at both frequencies, and can exploit the data-less code channel at L2.

The Jet Propulsion Laboratory (JPL) develops high-performance GPS receivers for satellite applications, and is interested in extending the capabilities of GPS measurement-systems. The ITT Space Systems Division (ITT/SSD) develops and builds the on-board electronics that produce GPS's signals in space, and is interested in promoting the best utilization of these signals. This paper describes how a joint team containing JPL and ITT/SSD engineers modified a GPS receiver in-flight to track the new signal. We examined the resulting data to perform initial radiometric checks of the new signal as received on a Low Earth Orbit (LEO) satellite.

2. BLACKJACK RECEIVER

The BlackJack GPS receiver was developed at JPL to support NASA's requirements for satellite-borne GPS science receivers [5]. The BlackJack is a flexible design that uses FPGA and software-intensive signal processing to provide high accuracy and flexibility. These receivers are dual-frequency, and use enhanced codeless processing to recover the P(Y) code observables. Nine BlackJack receivers have been used for a total of 30 years in-orbit with no hardware failures.

The receiver architecture is divided into four sections.

RF Section

The RF section amplifies, filters, and directly samples the GPS signals from one to four antennas.

FPGA Section

The FPGA section performs limited processing of data samples and routes them to the ASIC section. On power-up, the processor loads the FPGA with a design configuration that is modifiable via commands from the ground. This reconfigurable architecture allows the FPGA section to be used for special experiments, such as adding the capability to track new signals.

ASIC Section

The ASIC section uses gate array designs that JPL developed to provide high-accuracy science data observables. This section contains 48 channels, each capable of tracking one code from one satellite. For typical operation, the ASIC section inputs are data samples from the RF section and model values from the processor section, and it outputs in-phase and quadrature accumulation sums from early, prompt, and late correlators.

Processor Section

The processor uses these correlation sums to close tracking loops and generates the model phases and ranges sent to the ASIC section. The processor also generates observables, solves for the receiver position, schedules and conducts science experiments, provides receiver autonomous operation and fault recovery, etc. JPL designed the software for modification in flight.

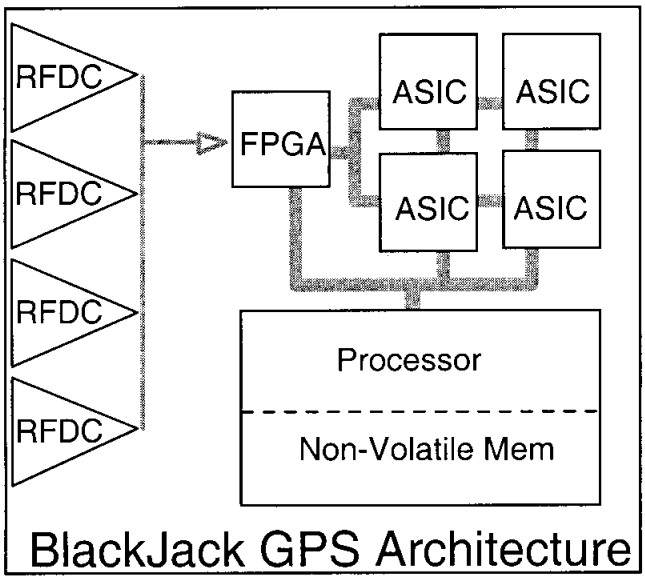

3. Receiver Modification

In order to track the L2C signal, we modified the FPGA and Processor sections. We added a separate tracking channel to the FPGA in order to handle generation and correlation of early, prompt, and late L2C code chips, producing accumulator outputs that are sent to the processor section.

We added software to the processor section to institute L2C tracking on PRN 17 when it was available.

These modifications were tested on an engineering model of the BlackJack receivers. The initial tests were made using the L2C simulator and prototype waveform generator ITT/SSD had developed in the course of their implementation of the L2C navigation and other signal packages.

After validation with the simulator, the satellite signal was tracked using signals from a rooftop antenna a few minutes after the L2C signal was first turned on at 2100 UT on 21 October, 2005.

Following successful ground testing, we modified the BlackJack receiver in orbit on the SAC-C [6,7] satellite. This modification was made as an engineering test. To expedite development, the test firmware and software did not include everything required for a flight BlackJack receiver used for occultation science research and development. We designed it with the minimum functionality required to characterize the new L2C signal.

4. Data Aquisition and Results

The data acquired in-orbit are shown in the figures below. Fig.1 shows the received C/A and L2C SNRs from PRN 17. These SNRs are not a direct measure of the broadcast power. They include additional factors such as different receive antenna gains at L1 and L2. The power received in L2C relative to C/A, P1(Y1), P2(Y2) was measured with the modified receiver in the lab, which used a choke ring antenna with better known gain patterns and less multipath, and these results are shown in Table 1.

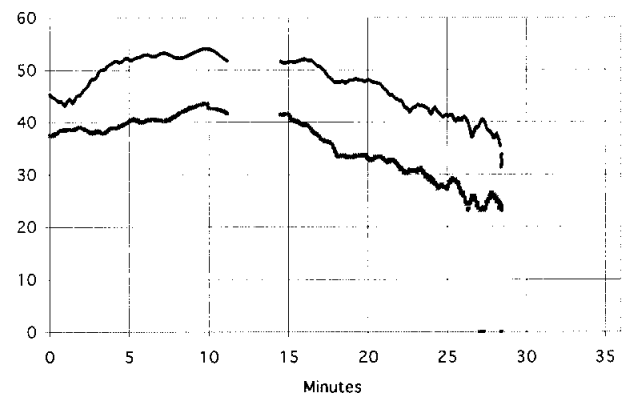

Fig. 1. L2C SNR data from modified BlackJack on the SAC-C LEO satellite, 1 November 2005. C/A SNRs are blue and L2C SNRs are red.

Table I
Relative Received Signal Power
Ground Measurement

PRN 17 Codes	Signal power ratio
L2C/P2(Y2)	-0.7 dB +/- 0.2 dB
L2C/C/A	-4.8 dB +/- 0.5 dB
L2C/P1(Y1)	-1.5 dB +/- 0.6 dB

The L2C and L1 C/A carrier phases measured on SAC-C were used to estimate the ionosphere. The SAC-C orbital altitude is about 705 km. Fig. 2. shows the measured variation in columnar electron content between SAC-C and PRN 17, expressed as the number of free electrons per meter squared. (One TEC unit is equal to 10^16 el/m^2.)

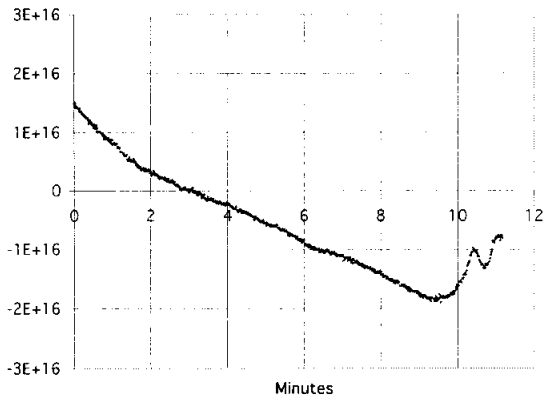

Fig. 2. Ionospheric change measured using CA– L2C phase from SAC-C LEO satellite on 1 November 2005. Columnar ionospheric content in electrons per square meter.

5. SUMMARY

A BlackJack flight GPS receiver, built and launched before the L2C code was even defined, has been modified to track the new signal from space. The initial experiments have shown that L2C is eminently useable as a signal for space-based science receivers. In particular, the higher SNR available from use of L2C relative to the encrypted P2(Y2) will give much more robust and accurate observables. The availability of a signal component that is not modulated by data bits allows for enhanced signal acquisition and processing under low SNR conditions. These advantages of L2C make it very attractive for applications such as precise orbit determination, atmospheric occultations, and recovery of surface-reflected GPS signals.

AKNOWLEDGMENT

The authors would like to acknowledge the contribution of the operators at the Cordoba Tracking Station in Cordoba, Argentina for their assistance with transmitting the BlackJack reconfiguration commands to SAC-C.

The research described in this paper was performed at the Jet Propulsion Laboratory, California Institute of Technology, under a contract with the National Aeronautics and Space Administration.

REFERENCES

[1] Peter F. MacDoran, Donovan J. Spitzmesser, "Method and apparatus for deriving pseudo range from earth-orbiting satellites" US Patent # 4,797,677, 10 January 1989.

[2] Thomas K. Meehan, Jess B. Thomas, and Lawrence E. Young, "P-Code Enhanced Method for Processing Encrypted GPS Signals Without Knowledge of the Encryption Code", US Patent # 6,061,390, 9 May 2000.

[3] Lorenz; Robert G. (Newark, CA); Helkey; Roger J. (Goleta, CA); Abadi; Kamran K. (Menlo Park, CA), "Global positioning system receiver digital processing technique", US Patent # 5,134,407, 28 July 1992.

[4] NAVSTAR GPS Interface Specification, IS-GPS-200D Revision D, 7 December 2004.

[5] Bertiger, W., Y. Bar-Sever, S. Desai, C. Duncan, B. Haines, D. Kuang, M. Lough, A. Reichert, L. Romans, J. Srinivasan, F. Webb, L. Young, J. Zumberge, "Precise Orbit Determination for the Shuttle Radar Topography Mission Using a New Generation of GPS Receiver," Proceedings of ION GPS 2000, Salt Lake City, UT, September 2000.

[6] Hajj, G. A., C. O. Ao, B. A. Iijima, D. Kuang, E. R. Kursinski, A. J. Mannucci, T. K. Meehan, L. J. Romans, M. de la Torre Juarez, and T. P. Yunck, "CHAMP and SAC-C atmospheric results and intercomparisons" J. Geophys. Res., 25 March 2004.

[7] Kuang, D., Y. Bar-Sever, W. Bertiger, S. Desai, B. Haines, B. Iijimi, G. Kruizinga, T. Meehan, L. Romans, "Precise Orbit Determination for CHAMP using Data from BlackJack Receiver," Proceedings of the ION National Technical Meeting 2001, Long Beach, CA, January 24, 2001