LASER FREQUENCY STABILIZATION FOR COHERENT LIDAR APPLICATIONS USING NOVEL ALL-FIBER GAS REFERENCE CELL FABRICATION TECHNIQUE

Patrick Meras Jr., Ilya Y. Poberezhskiy, Daniel H. Chang, Jason Levin and Gary D. Spiers

Jet Propulsion Laboratory, California Institute of Technology, Pasadena, CA 91109, USA, Patrick.Meras@jpl.nasa.gov

ABSTRACT

Compact hollow-core photonic crystal fiber (HC-PCF) gas frequency reference cell was constructed using a novel packaging technique that relies on torch-sealing a quartz filling tube connected to a mechanical splice between regular and hollow-core fibers. The use of this gas cell for laser frequency stabilization was demonstrated by locking a tunable diode laser to the center of the P9 line from the $\nu_1+\nu_3$ band of acetylene with RMS frequency error of 2.06 MHz over 2 hours. This effort was performed in support of a task to miniaturize the laser frequency stabilization subsystem of JPL/LMCT Laser Absorption Spectrometer (LAS) instrument.

1. INTRODUCTION

Tracing gas concentrations and profiles in the Earth's atmosphere has been of growing global interest. One atmospheric gas that has attracted immense attention has been carbon dioxide (CO_2), due to the role it plays in the Earth's climate change. Intense scientific and technological efforts have set forth to accurately identify and characterize sinks and sources of atmospheric CO_2. Observation of CO_2 from the Earth's atmosphere can be achieved with the Laser Absorption Spectrometer (LAS) [1,2], a 2 μm instrument that utilizes an integrated path differential absorption (IPDA) technique to capture accurate atmospheric CO_2 measurements. IPDA measurement accuracy is, to a large degree, determined by the laser frequency stability. The LAS instrument has been developed and built by JPL and Lockheed Martin Coherent Technologies (LMCT) and recently flown in an aircraft [?]. Several technological efforts to improve the instrument design and performance are ongoing. We shall report on the progress of our effort to miniaturize the frequency locking subsystem of the LAS, by building an all-fiber implementation of its optical portion.

Laser frequency stabilization techniques use longitudinal modes of a Fabry-Perot cavity or a molecular resonance frequency in gas to generate a frequency error signal [3,4]. Unlike Fabry-Perot cavities, molecular gas cells provide an absolute frequency reference and thus are advantageous for long term frequency stability and do not require as much environmental control. Presently, common gas reference cells are made of glass or metal and are typically tens of cm in length; thus, they drive the volume and mass of the entire frequency stabilization subsystem.

The use of a gas-filled hollow-core photonic crystal fiber as a frequency reference has been proposed in recent years and actively pursued due to the inherent attractiveness of this concept [5-8]. An HC-PCF gas cell can be dramatically smaller in size and weight compared to the conventional one and is intrinsically fiber-compatible, thus allowing realization of an all-fiber optical portion of the frequency-locking subsystem. This leads to significant mass and volume savings, which are particularly important for aircraft and space instruments. Moreover, HC-PCF gas cell would allow interaction of light with gas for tens of meters, thus enabling the use of weaker molecular resonances as frequency reference.

Several approaches have been proposed for fabrication of HC-PCF reference cells, i.e. their evacuation, refilling with the desired gas to needed pressure and the consequent resealing/fiber connectorization [5-8]. The most advanced approaches rely either on sealing the fiber using fusion or mechanical splicing inside a gas chamber, which requires setting up complicated tooling inside the chamber, or expose one end of HC-PCF to atmosphere for a period of time before it is sealed, potentially contaminating it.

We have recently proposed a novel packaging approach [8] that relies on a sealable filling tube above a mechanical splice to evacuate, refill, and seal the gas cell without the need for tooling inside a vacuum chamber or exposing gas-filled HC-PCF to atmosphere.

Here we will describe this approach to making an HC-PCF gas cell, and report the frequency stabilization of a tunable diode laser to an acetylene (C_2H_2) absorption line using this novel gas reference cell design.

2. HC-PCF GAS CELL IMPLEMENTATION

The reference gas cell consists of a single-mode fiber (SMF) pigtail fusion spliced to one end of a HC-PCF with a Fitel arc splicer (S182-PM). The other end of the HC-PCF is mechanically spliced to a multi-mode fiber (MMF) pigtail by butt-coupling the two fibers in a silicon v-groove. Optical coupling in the mechanical splice was optimized by aligning the MMF and HC-

PCF in the v-groove with the aid of a 3-axis PI Nanocube µ-controller stage and maximizing the optical transmission. Alignment was then set by applying a small dose of low-shrinkage UV epoxy to the fibers. The MMF was angle cleaved at 8º to avoid back reflections, and ~60 µm gap was left between the two fibers for gas access to the HC-PCF. A quartz filling tube was epoxied over this gap with the other end attached to a vacuum chamber via an "ultra-Torr" connector (Figure 1a). The HC-PCF was then evacuated of air by a roughing pump and then back-filled with the reference gas to a desired pressure. The pressure was monitored using an MKS capacitance gauge with 0.01% resolution. Once the desired pressure was reached, the quartz tube was torch-sealed leaving a compact hermetic all-fiber gas cell. Figure 1b shows a rough first-generation implementation; the junction can be made significantly smaller.

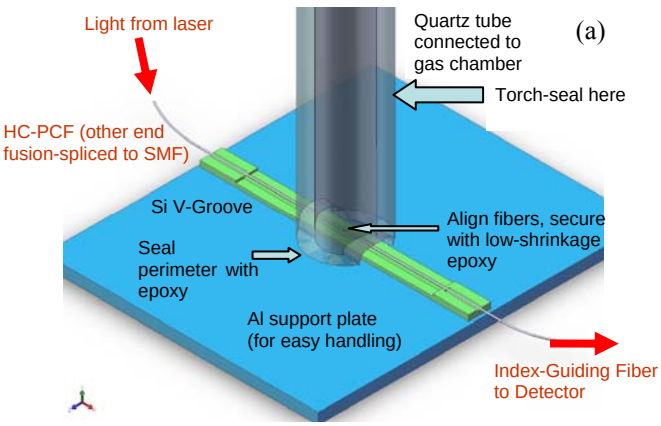

Figure 1. (a) CAD showing the refilling/sealing concept utilizing a sealable quartz filling tube above the mechanical splice (b) a first-generation realization of this concept.

The configuration and experimental setup of the reference gas cell are illustrated in Figure 2. It was constructed from 4 meters of Crystal Fibre A/S hollow-core photonic crystal fiber (HC-1550-02), with a core diameter of 10.9 µm formed by removing 7 hexagonal units cells from the 120 µm diameter cladding. The HC-PCF was evacuated of air for over 14 hours and back-filled with ~0.5 Torr of acetylene (C_2H_2) with nominal purity of 99.6%. We selected C_2H_2 because it has strong absorption lines ~1550 nm region. Ultimately, we intend to lock a laser to a CO_2 line ~2050 nm and we have previously demonstrated refilling the gas cell with CO_2 [8], but CO_2 lines in the 1530-1580 nm range are relatively weak.

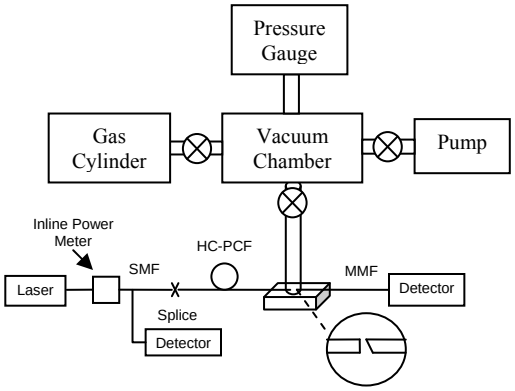

Figure 2. Experimental setup for refilling and connectorization of HC-PCF reference gas cell. Fusion splice of a SMF and HC-PCF is shown at one end, and a mechanical splice of a HC-PCF and MMF at the other end. The MMF was angle cleaved at 8°.

A New Focus Velocity 6328 tunable diode laser wavelength was scanned from 1529 nm to 1531 nm in order to observe the P9 line from the $\nu_1+\nu_3$ band of C_2H_2 located at 1530.3710 nm [9]. The transmission spectrum is shown in Figure 3.

The off-resonance transmission loss through the reference gas cell was approximately 5 dB, primarily from the fusion splice and butt-coupling losses. Fusion splicing SMF to HC-PCF adds approximately 1.5 dB excess loss and requires careful attention to selecting correct splicing parameters to avoid HC-PCF core recess and the collapse of the cladding holes [9]. Structural lattice damage to the HC-PCF can weaken the splice strength and increase transmission loss. Mode mismatch is another factor that needs to be considered when conducting a fusion splice because this will not only increase transmission loss but create power fluctuations [9]. Butt coupling was particularly challenging for us, since HC-PCF and MMF had different cladding diameters, 120 µm and 125 µm respectively, in a v-groove designed for fiber cladding diameter of 125µm. This caused lateral offset between the cores of MMF and HC-PCF, reducing transmission through the mechanical splice and increasing power fluctuations. To address this problem, we are switching to v-grooves with two different halves designed to

accommodate the exact cladding diameters of the appropriate fiber.

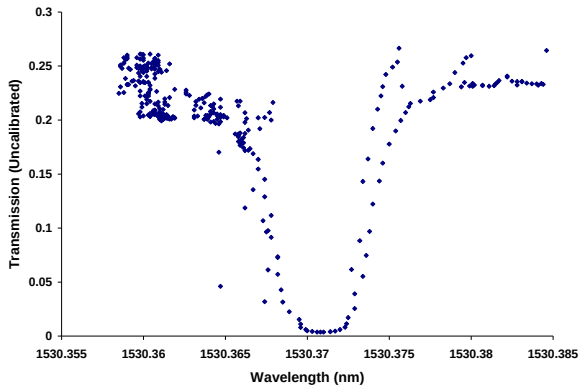

Figure 3. Absorption profile of the P9 line from the $\nu_1+\nu_3$ band of C_2H_2 located at 1530.3710 nm after passing through 4 meters of HC-PCF at 0.5 Torr.

3. LASER FREQUENCY STABILIZATION

To demonstrate the use of our HC-PCF reference cell for laser frequency stabilization, we implemented a basic Pound-Drever-Hall (PDH) frequency stabilization scheme as shown in Fig. 4 and described in [3,4]. PDH technique uses sidelobes produced by an electro-optic phase modulator to generate an error signal proportional to the difference between the laser frequency and the center of the molecular resonance.

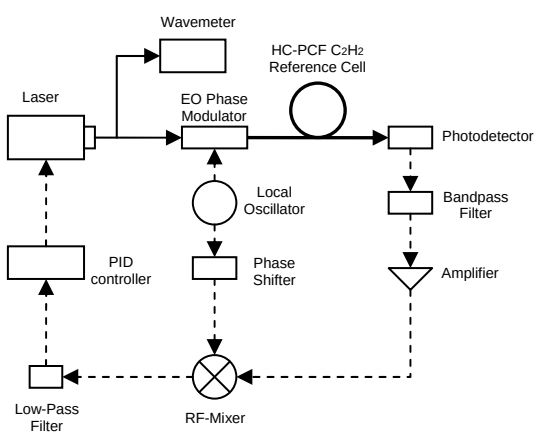

Figure 4. PDH laser frequency stabilization setup. Optical signal paths are shown as solid lines, electrical signal paths – dashed lines.

A portion of the light from New Focus Velocity tunable diode laser was monitored by a wavemeter (EXFO Burleigh-1500), the rest was modulated in a JDSU $LiNbO_3$ Electro-Optic Phase Modulator (EOPM), with modulation frequency of 720 MHz. The modulated light was then passed through the HC-PCF C_2H_2 gas reference cell and detected with a New Focus 1414 photodetector. This electrical signal was bandpass filtered at the modulation frequency, amplified, and mixed with the local oscillator signal phase shifted to compensate for the phase mismatch between the two signal paths.

Before closing the feedback loop, we applied a triangle wave to the laser PZT input, producing a known frequency modulation of 43 pm/V, and recorded the resulting error signal. The local oscillator frequency, amplitude and the RF phase shift were selected to achieve the optimal error signal profile with the steepest zero crossing slope. This produced a mapping between the laser frequency deviation and the error signal magnitude, shown in Figure 5, which is later used to determine the laser frequency in the range where the error signal is linear.

The error signal was then sent into a Stanford Research Systems analog PID controller (model SIM960). The PID controller provides a correction voltage to the laser PZT input, thereby locking the laser frequency to the zero crossing point of the error signal, which corresponds to the center of the P9 line from the $\nu_1+\nu_3$ band of C_2H_2.

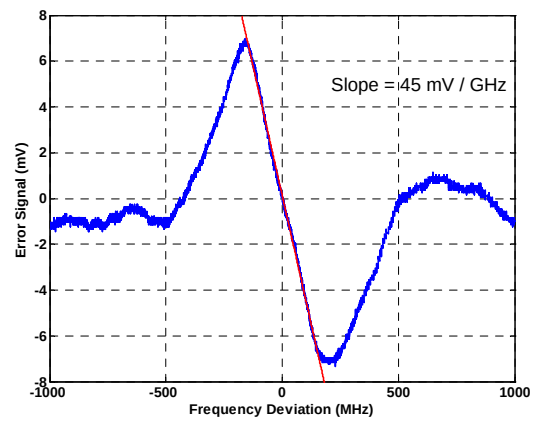

Figure 5. Error signal as a function of laser frequency around the C_2H_2 P9 absorption line. Zero crossing of the error signal occurs at the line center at 1530.3710 nm.

Laser frequency fluctuations were measured by recording the error signal using a data acquisition card. Error signal magnitude divided by the slope of its linear portion (Fig. 5) gives laser frequency information as long as the frequency does not drift away from this linear portion. Laser frequency fluctuations over almost 2 hours are shown in Figure 6 for a free-running and locked laser. When the laser was free-running, its frequency drifted over 200 MHz with 15.8 MHz standard deviation. Once we close the PDH laser frequency stabilization loop, the laser frequency became locked with standard deviation of 2.06 MHz.

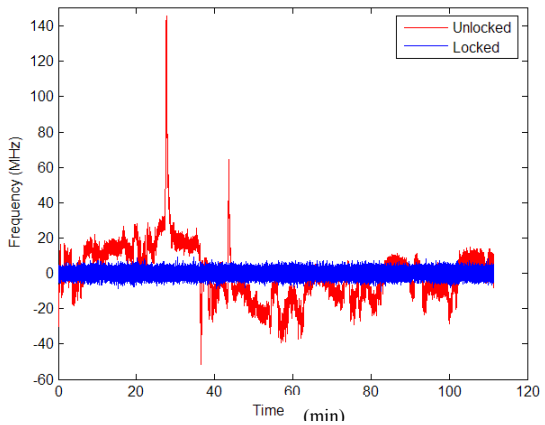

Figure 6. Laser frequency fluctuations when laser is free-running (red) and locked to a HC-PCF C2H2 reference gas cell (blue). Closed-loop RMS frequency deviation of 2.06MHz is achieved.

4. CONCLUSION

We have successfully demonstrated the laser frequency stabilization capabilities of a hollow-core photonic crystal fiber gas reference cell built using our novel refilling and connectorization approach. We intend to pursue this approach to construct a CO_2 reference gas cell for laser stabilization at 2.05 µm and eventually miniaturize mass and volume of the laser frequency locking subsystem used in JPL/LMCT Laser Absorption Spectrometer. Besides coherent lidar, HC-PCF gas reference cells show promise for applications in optical metrology and communications, and are particularly attractive for flight instruments where mass and volume savings associated with the all-fiber implementation are particularly valuable.

5. ACKNOWLEDGEMENT

This work has been funded by JPL Research and Technology Development program and carried out at the Jet Propulsion Laboratory, California Institute of Technology, under a contract with NASA.

REFERENCES

[1] Spiers, G. D., Menzies, R. T., Tratt, D. M., 2002: The Laser Absorption Spectrometer for Carbon Dioxide Sink and Source Detection, *Proceedings of the Second Annual Earth Science Technology Conference*, National Aeronautics and Space Administration Earth Science Technology Office, Greenbelt, Md., 2002

[2] Menzies, R. T., Tratt, D. M., 2003: Differential laser absorption spectrometry for global profiling of tropospheric carbon dioxide: selection of optimum sounding frequencies for high-precision measurements, *Applied Optics*, **42**, pp. 6569-6577.

[3] Hall, J. L., 1992: Frequency stabilization laser-a parochial review, *SPIE*, **1837**, pp. 2-15.

[4] Black, E. D., 2001: An introduction to Pound-Drever-Hall laser frequency stabilization, *American Association of Physics Teachers*, **69**, pp 79-87.

[5] Benabid, F., Knight, J. C., Antonopoulos, G., Russell, P. St. J. 2002: Stimulated Raman Scattering in Hydrogen-Filled Hollow-Core Photonic Crystal Fiber, *Science*, **298**, pp. 399 – 402.

[6] Benabid, F., Knight, J. C., Antonopoulos, G., Russell, P. St. J., 2005: Compact, stable and efficient all-fibre gas cells using hollow-core photonic crystal fibres, *Nature*, **434**, pp. 488-491.

[7] Tuominen, J., Ritari, T., Ludvigsen, H., 2004: Gas sensing using air-guiding photonic bandgap fibers, *Optics Express*, **12**, pp. 4080-4087.

[8] Poberezhskiy, I. Y., Meras, P., Chang, D. H., Spiers, G. D., 2007: Compact and Robust Refilling and Connectorization of a Hollow Core Photonic Crystal Fiber Gas Reference Cells, *The 20th Annual Meeting of the IEEE Lasers and Electro-Optics Society (LEOS)*, pp. 568-569.

[9] Tuominen, J., Ritari, T., Ludvigsen, H., Peterson, J.C., 2005: Gas filled photonic bandgap fibers as wavelength references, *Optics Communications*, **255**, pp. 272-277.

[10] Thapa, R., Knaba, K., Corwin, K.L., Washburn, B.R., 2006: Arc fusion splicing of hollow-core photonic bandgap fibers for gas-filled fiber cells, *Optics Express*, **14**, pp. 9576-9583.

[11] Hoo, Y. L., Jin, W., Shi, C., Ho, H. L., Wang, D. N., Ruan, S. C., 2003: Design and modeling of a photonic crystal fiber gas sensor, *Applied Optic*, **42**, pp. 3509-3515.

[12] Hald, J., Petersen, J. C., Henningsen, J., 2007: Saturated Optical Absorption by Slow Molecules in Hollow-Core Photonic Band-Gap Fibers, *The American Physical Society*, **98**, pp. 213902-1 - 213902-4.

[13] Smith, C. M., Venkataraman, N., Gallagher, M. T., Muller, D., West, J. A., Borrelli, N. F., Allen, D. C., Koch, K. W., 2003: Low-loss hollow-core silica/air photonic bandgap fibre, *Nature*, **424**, pp. 657-659.