NASA DATA STANDARDS PROGRAM OFFICE

NASA Data Standards Working Group

CCSDS Fall Meeting - Heppenheim - Oct. 2-5, 2007

Discussion on LDPC Codes and Uplink Coding

Ken Andrews, Dariush Divsalar, Sam Dolinar, Bruce Moision, Jon Hamkins, Fabrizio Pollara

JPL, Communications Architectures and Research section

Fabrizio.Pollara@jpl.nasa.gov

NASA DATA STANDARDS PROGRAM OFFICE

NASA Data Standards Working Group

CCSDS Fall Meeting - Heppenheim - Oct. 2-5, 2007

Space Link Coding & Synchronization

Progress on LDPC Codes at JPL

Ken Andrews, Dariush Divsalar,
Sam Dolinar, Jon Hamkins,
Fabrizio Pollara

JPL, Communications Architectures and Research section

Fabrizio.Pollara@jpl.nasa.gov

OVERVIEW

Working Group Objectives

- The objective is to develop and recommend new error correcting codes for near-Earth, Lunar, and deep space applications
  - The main features for which improvements are sought are: Power efficiency, bandwidth efficiency, complexity (encoding/decoding speed), latency

CCSDS Meeting goals (WG - overall)

- Discuss the three Orange Books (NASA, ESA, CNES) relative merits
- Discuss progress in the three Agencies
- Make a concerted effort to decide what should be standardized
- Plan future activities

NASA goals

- Request the start of a "white book" recommendation on LDPC codes based on the NASA Orange Book (Leading to a Red Book)
- Discuss NASA's plans to use LDPC codes in deep space and Lunar missions, and compare with plans by ESA and CNES. Leverage on the alignment with Cx Program, which recommended an LDPC code for all uplink, downlink, and proximity links, and CMLP study, which recommends LDPC, Turbo, CC, and RS codes
- Discuss NASA's progress in LDPC codes, testing, and infusion activities

STATUS

- **WG History**

  (Jan. 07)
  - **Discussed revision of NASA Orange Book to include variant of LDPC codes (AR4JA). This revision is now approved and published**
  - **Discussed CNES and ESA Orange Books**
  - **Discussed advantages and disadvantages of each proposal**
  - **Discussed progress of each Agency in validating each coding scheme**
  - **Presented new results on long erasure codes**
- **The overall (long-term) history is that of a rather dysfunctional WG, which cannot reach a decision since several years (three candidate recommendations on the table: NASA, ESA, CNES)**

TECHNICAL PROGRESS

Summary

- Measured (by SW simulation) the performance loss of the AR4JA (2048,1024) LDPC code when the receiver can provide only hard decoded symbols (e.g., the Integrated Receiver)
- Performed a detailed study of the LDPC decoder sensitivity to symbol scaling errors
- Implemented advanced frame synchronizing algorithms and modified them for low-complexity implementation. Measured their performance, compared to that of some codes in use
- Performed LDPC Decoder Tests at ESTL (JSC) with the Integrated Receiver
- Provided/licensed the JPL-designed FPGA LDPC decoder to industry, NASA centers, and other agencies
- Infusion activities:
  - Low-Density Parity-Check (LDPC) code was chosen for all coded links of Constellation
  - The LDPC code was tested for Space Network (SN) compatibility and performance
  - Mars Science Lab (MSL) to Mars Reconnaissance Orbiter (MRO) link will use same code
  - TDRS K-Band Upgrade Project (TKUP-A)
  - Several new users of JPL LDPC technology
- Participated in the Space Planning Working Group (SPWG, formerly SCAWG) Coding, Modulation, and Link Protocol (CMLP) study
- Contributed to the study on the comparison of the LDPC C2 code and a TPC (Turbo Product Code) — C2 code has better error floor
- Determined a rule of thumb for the truncation length necessary in decoding punctured convolutional codes (This replaces an incorrect rule that has been in use for many years)
- Long erasure codes were presented at the Jan. 07 mtg.; New results on DSN outage statistics from MRO and WVR studies support the usefulness of these codes in conjunction with ARQ schemes; Developed new rateless codes

Hard-decision Decoding of LDPC Codes

- Simulated hard-decision decoding of the AR4JA (2048,1024) LDPC code on the Additive White Gaussian Channel to measure performance. Loss compared to soft-decision decoding is 1.8 dB
- Motivation: In the Space Network missions provide Reed-Solomon (RS) encoding/decoding and White Sands Complex (WSC) only provides Convolutional encoding/decoding or hard-quantized received symbols

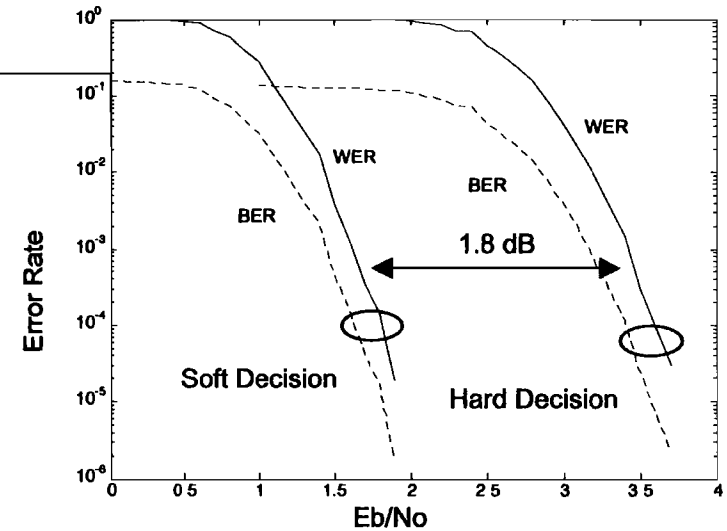

- Studied through analysis and verified through simulations two methods that can circumvent the codeword miscorrection problem for the AR4JA LDPC code due to receiver symbol slips:
  1. Use the recommended CCSDS randomizer PN sequence. At the receiver, the PN sequence XORed with a shifted version of itself leads to gibberish that results in an undecodable codeword. No miscorrection were observed in 10,000 decoding trials
  2. A simple reversal of the codeword parity during transmission also avoids this problem. A symbol slip would cause the information bits to shift in one direction and the parity in the other, at the input of the decoder (after undoing the parity reversals). This alters the quasi-cyclic nature of the code and prevents codeword miscorrections. No miscorrection were observed in 10,000 decoding trials
- Motivation: The AR4JA LDPC code family is quasi-cyclic. That is, a quasi-cyclic shift of the code bits leads to another codeword. Symbol slips are known to occur in the Integrated Receiver (IR) at WSC in the desired SNR operating region. A slip in receiver symbols causes a quasi-cyclic shift in the code bits of a codeword. Thus, a symbol slip could lead to a codeword miscorrection

LDPC Decoder Sensitivity to Symbol Scaling Errors

Background

Problem:

Transmit: x = {+1,-1}

Receive: $y = Ax + \mathcal{N}(0,\sigma^2)$

Compute LLRs for decoder: $\lambda = A/\sigma^2\, y$

However: This requires estimates of A and σ

How does decoder performance degrade if it is given $\lambda' = \rho\,\lambda$ instead?

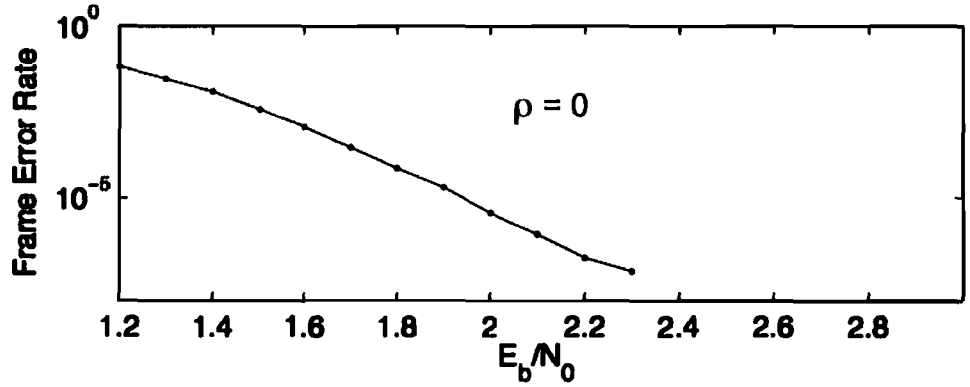

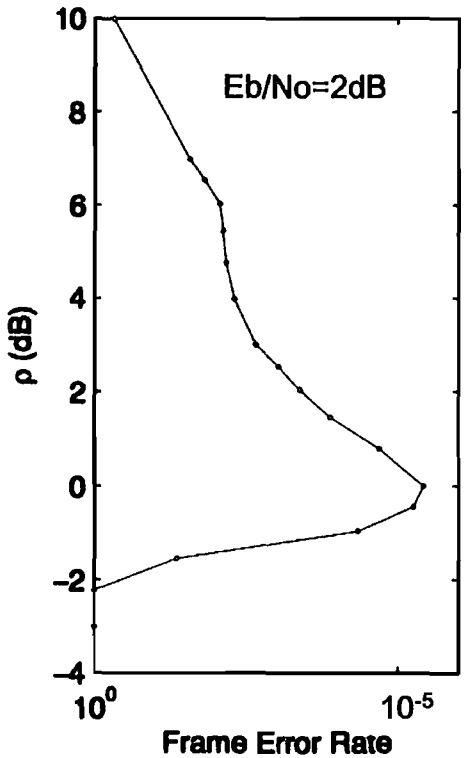

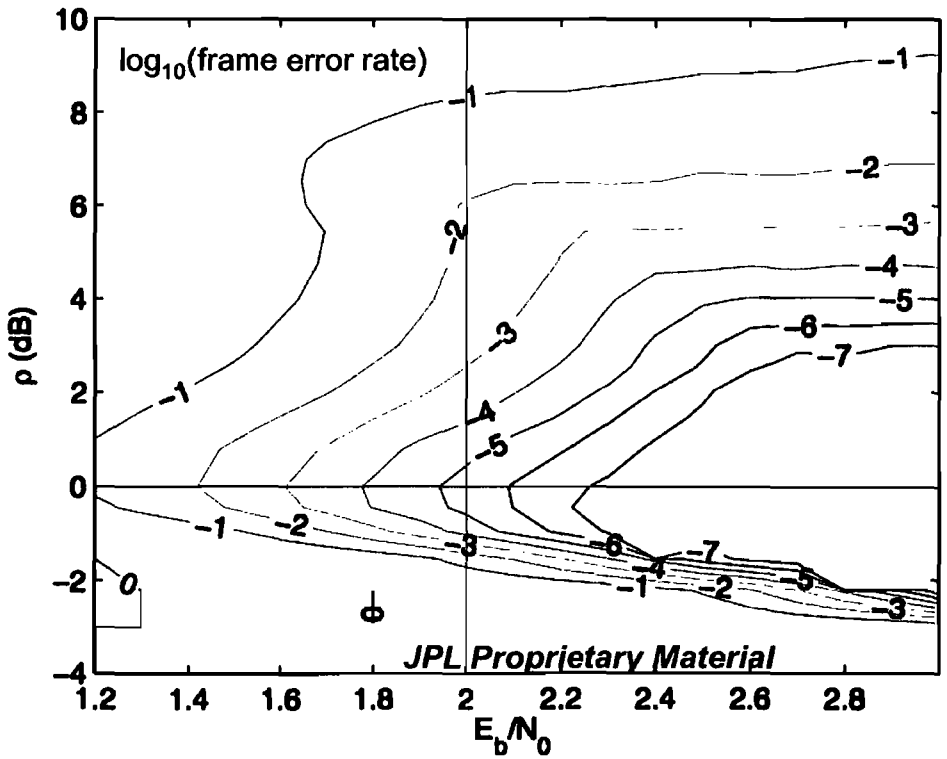

Frame Synchronizer Performance Study

Performance of several frame synchronizer algorithms compared to that of some good codes

Conclusions:

- Hard and soft correlators are *not* good synchronization strategies. Massey published the optimal algorithm in 1972!
- Matching one 64-symbol sync mark isn't good enough for modern rate-1/2 codes, even with Massey's optimal algorithm
- Matching two sync marks (128 symbols) is sufficient
- A low-complexity version implemented in FPGA hardware gives the performance shown by the black curve.

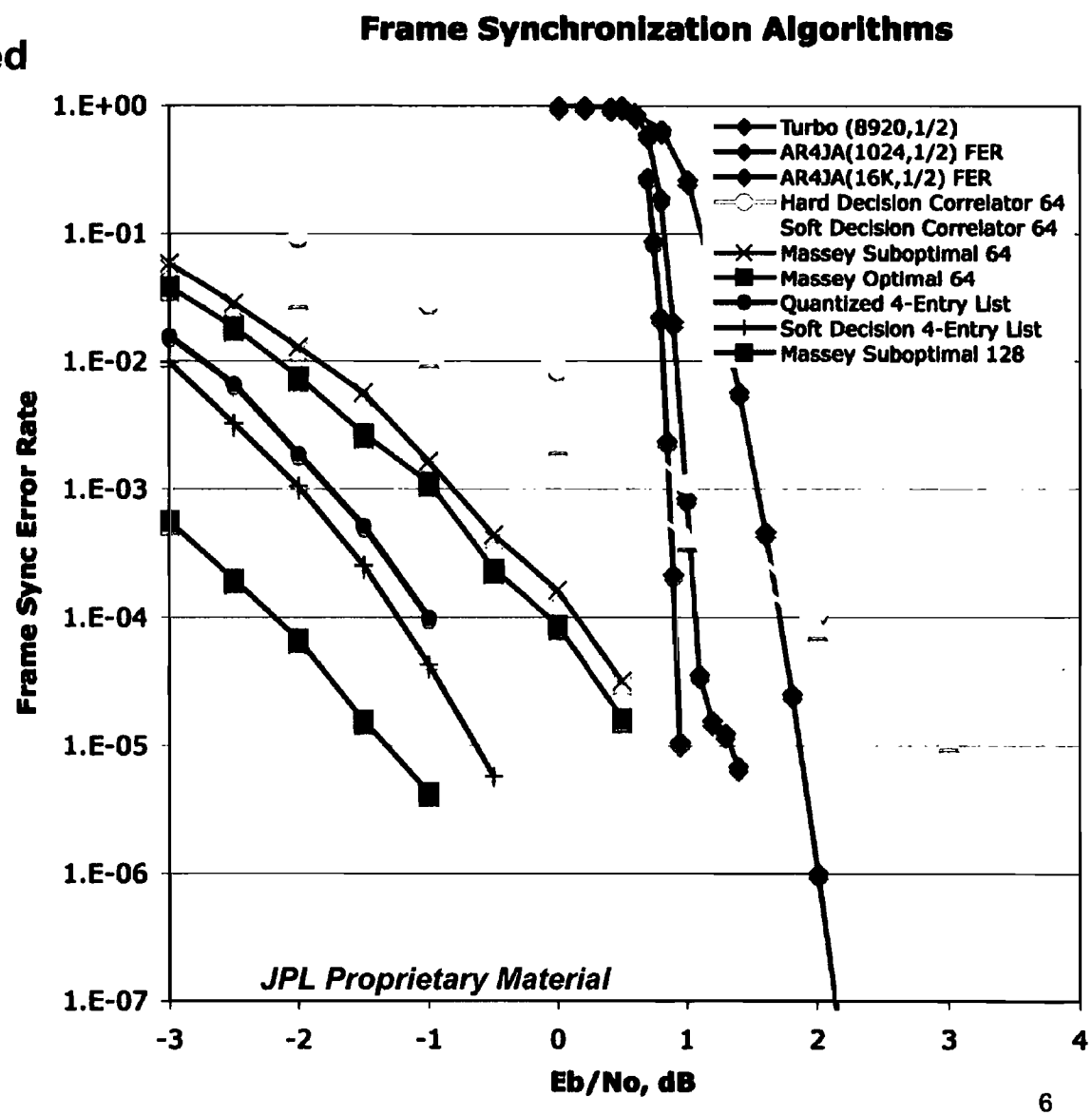

LDPC Decoder Tests at ESTL

- Performed LDPC codes tests at ESTL
  - Two main sources of false measured errors:
    - False frame synchronization unlock (burst of 80 bit errors)
    - Bit slip events reduces the BER slope
  - Predicted LDPC implementation loss at 1 Mbps is 0.7 dB
  - Loss of 0.7 dB = 0.4 dB (uncoded) + 0.3 dB (LLR)
- Has endorsement from Chatwin Landsdowne @ JSC

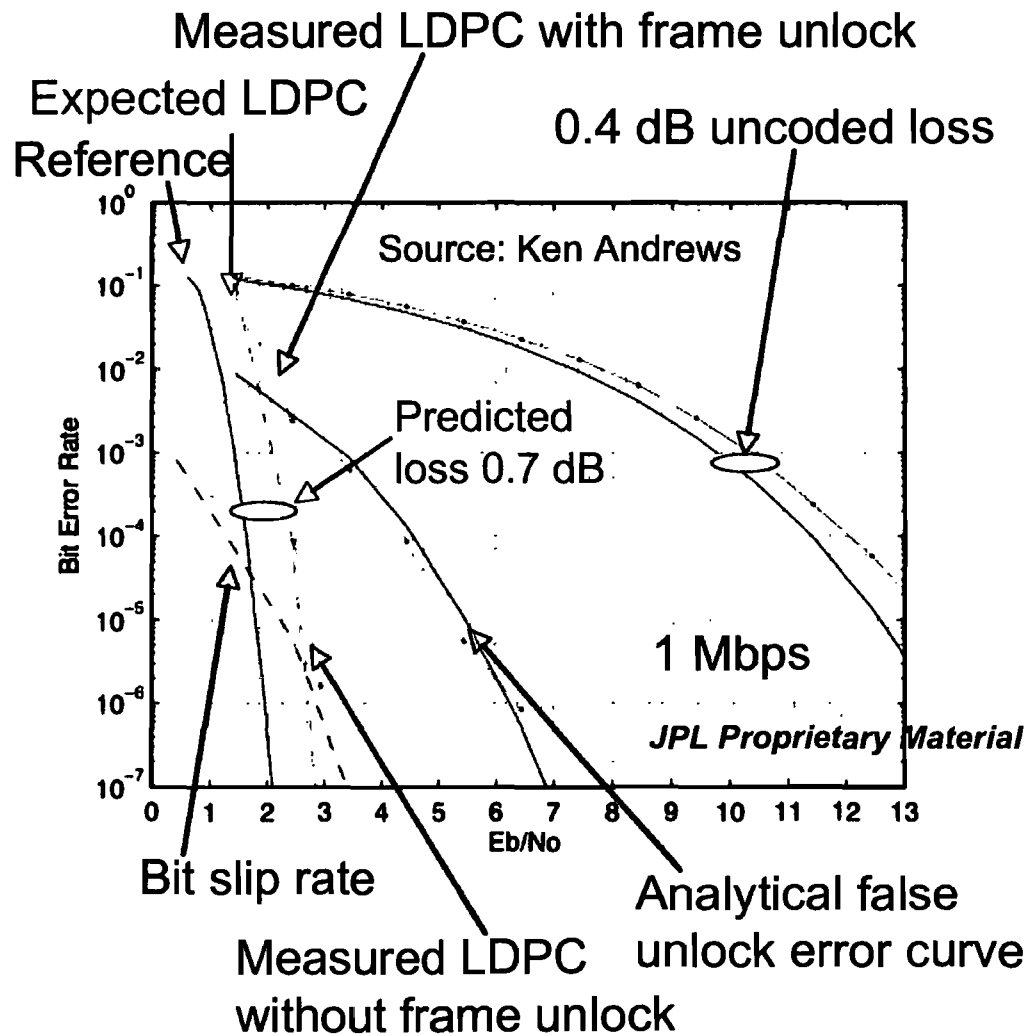

Distribution of JPL's FPGA LDPC Decoder

Industry, NASA centers, and other agencies are using the JPL-designed FPGA LDPC decoders

- LDPC encoders and decoders on FPGA
  - 720 Msps block-circulant LDPC encoder
  - 102 Msps decoder for (4096,1/2) AR4JA LDPC code
  - 86 Msps decoder for GSFC's r=7/8 C_2 LDPC code

Companies
- Efficient Channel Coding (ECC)
- RTLogic
- Avtec
- L3 Communications
- Lockheed Martin
- Cincinnati Electronics

NASA centers
- Johnson Space Center
- Goddard Space Flight Center
- Several JPL projects

Spacecraft
- MSL - MRO Proximity Link (implemented; tests ongoing)
- Constellation (baseline plan)
- Cibola Flight Experiment (initial discussions underway)
- AIRSAR (aircraft based)

Infusion Accomplishments

- Low-Density Parity-Check (LDPC) code was chosen for all coded links of Constellation
  - The JPL AR4JA (k = 1024, rate = ½) LDPC code will be used for both uplink and downlink
  - Saves 1.6 dB of power and reduces latency 40 to 90%, compared to legacy code
  - Recommendation based on a comprehensive FEC study (JPL, GSFC, JSC, and led by ITT)
  - Lockheed-Martin has licensed JPL LDPC encoder/decoder technology for CEV spacecraft
  - Choice is contingent on successful TRL advancement from 5 to 9
- The LDPC code was tested for Space Network (SN) compatibility and performance
  - LDPC tests conducted 2/20/2007 to 3/2/2007, at JSC Electronic Systems Test Laboratory (ESTL)
  - Decoder operated error-free in all SNR regions the receiver could lock
  - The successful demonstration represents TRL advancement from 4, to 5 (encoder) and 6 (decoder)
- Mars Science Lab (MSL) to Mars Reconnaissance Orbiter (MRO) link will use same code
  - Feasibility study for use of AR4JA (1024,½) LDPC code is complete
  - Complete designs for MSL encoder and MRO decoder have been completed
- TDRS K-Band Upgrade Project (TKUP-A)
  - Three vendors licensed the JPL LDPC technology during proposal phase
  - Two vendors have been selected to demonstrate LDPC codes: IN-SNEC, and RT Logic
  - Demonstration of AR4JA(1024,1/2) code will occur in Jan. 2008
- Users of JPL LDPC technology
  - Cincinnati Electronics, L-3 Space Communications, MIT/LL, Lockheed Martin, RTLogic
- AOFDM-LDPC system for the Air Force

CMLP Study

- **Space Planning Working Group (SPWG, formerly SCAWG) Coding, Modulation, and Link Protocol (CMLP) study**
  - **What the study did:**
    - Created extensive catalog of all reasonable modulations and codes
    - Enumerated all communications links in NASA's strategic planning documents
    - Developed comprehensive Figures of Merit by which to compare codes and modulations
    - Created recommendations of codes and modulations for classes of links
  - CMLP recommendations
    - Modulations: PCM/PSK/PM, BPSK, QPSK, OQPSK, precoded GMSK, 8-PSK, 16-QAM
    - Codes: CC(7,1/2), RS(255,223), AR4JA LDPC, C2 LDPC
    - All codes and modulations are discussed in CCSDS documents (not all are Blue Books)
  - **Final report will come out in September**

CMLP Study - Recommended Codes

Network Parameter	Recommended Technique	Typical Application
Coding	CCSDS turbo codes (r = 1/6, 1/4, 1/3)	• For low data rate, severely power-constrained links or links which have little spectral containment requirements • Typical application may be a small Mars surface platform with DTE/DFE link
	CCSDS AR4JA LDPC codes (r = 1/2, 2/3, 4/5)	• Code family with general applicability to most links • Envisioned future replacement to traditional convolutional and concatenated codes • Offers superior coding gain over traditional codes
	CCSDS C2 LDPC code (r = 7/8)	• For links which are power-constrained and spectrum-constrained • Typical application may be high data rate CAT A missions
	Convolutional codes	• Mid-Transition: General applicability to most links except spectrum-constrained links • Post-Transition: For severely latency-constrained links only • Offers superior heritage and reliability • Typical application may be a LEO mission's TT&C link and the high rate science link
	Legacy Reed-Solomon, BCH	• R-S and BCH have general applicability to most links, especially as outer codes • Need for an outer code is diminished with planned migration to LDPC codes as noted above • Typical application may be a mission which launches prior to the demonstrated operational readiness of LDPCC-capable NASA infrastructure
	Uncoded	• For links which are not power-constrained • Although a mission may not be power constrained, consideration should be given to use of a code because of the benefits to power flux density and resiliency to distortions • Typical application may be an X-band LEO mission downlinking at a very high data rate to the NASA GN

Ka-band Outages

- Deep-Space Ka-band link outages were simulated using Water Vapor Radiometer (WVR) data and models for DSN antennas
  - Average outage duration of between 30 minutes and an hour depending on the complex
  - Outage duration standard deviation are larger than the average outage duration
  - Some outages could last several hours
  - Ka-band fades too deep (x4 in dB greater than X-band) to use a simple margin policy. Retransmissions and/or long erasure codes are necessary to assure data completeness

Day 2006-200, DSS-26 Ka-band Link Performance Simulation for MRO

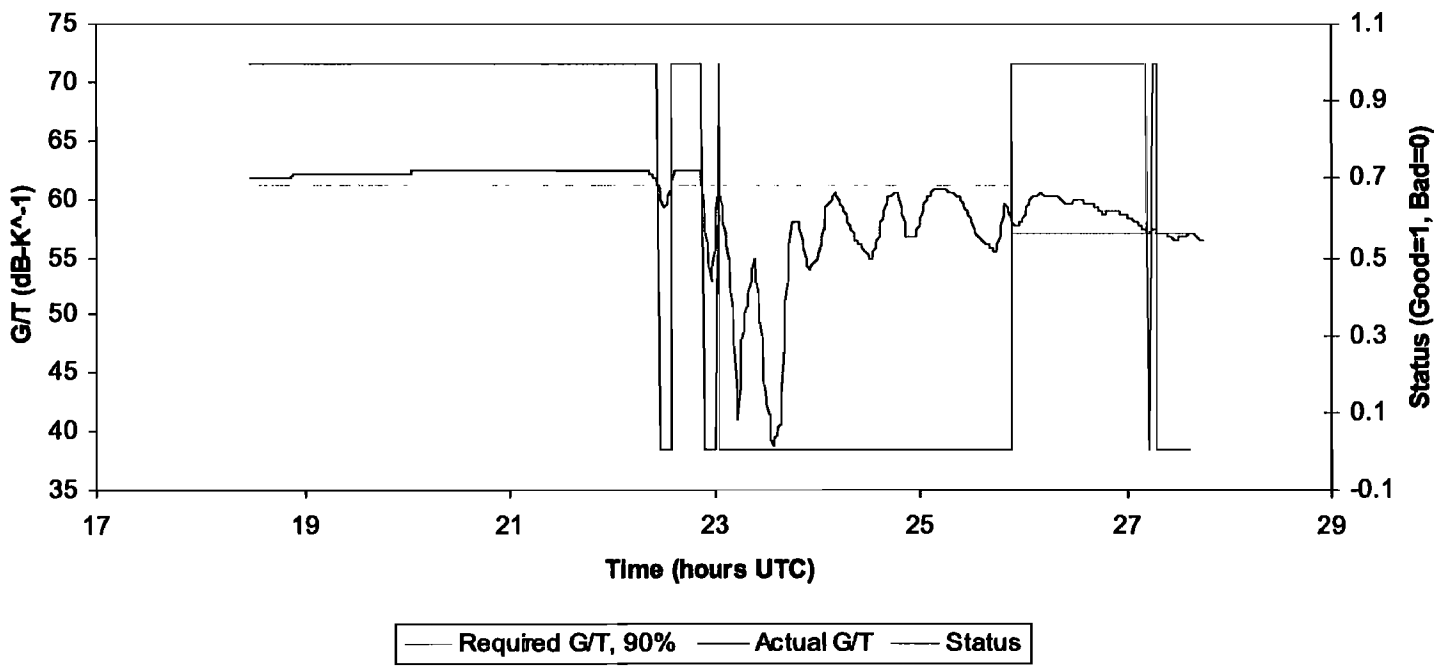

Pseudo-Randomizer with LDPC Decoder and CRC

Motivation

Some implementers have been uncertain how to apply a de-randomizer to received soft symbols.

Solution

- Randomization of binary symbols is performed by inverting some symbols.
- De-randomization of soft symbols is performed by negating some noisy symbols.
- Implementation details were documented and distributed via memo to Constellation team members in March.

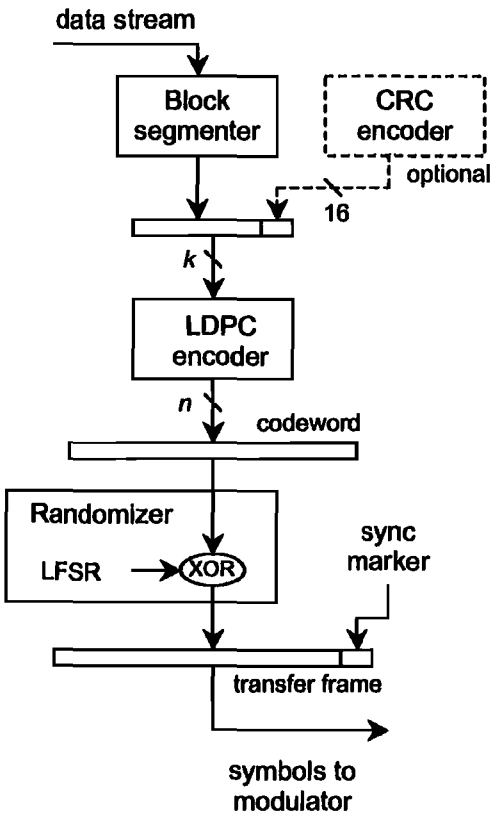

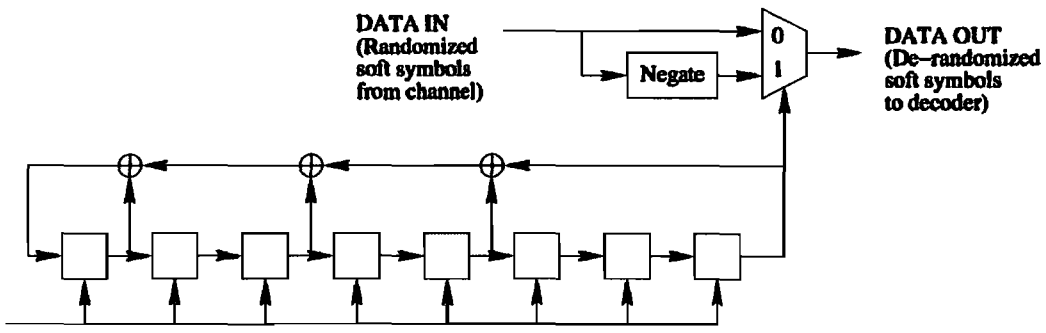

Initialize to an "all ones" state for each Codeblock or Transfer Frame during ASM period

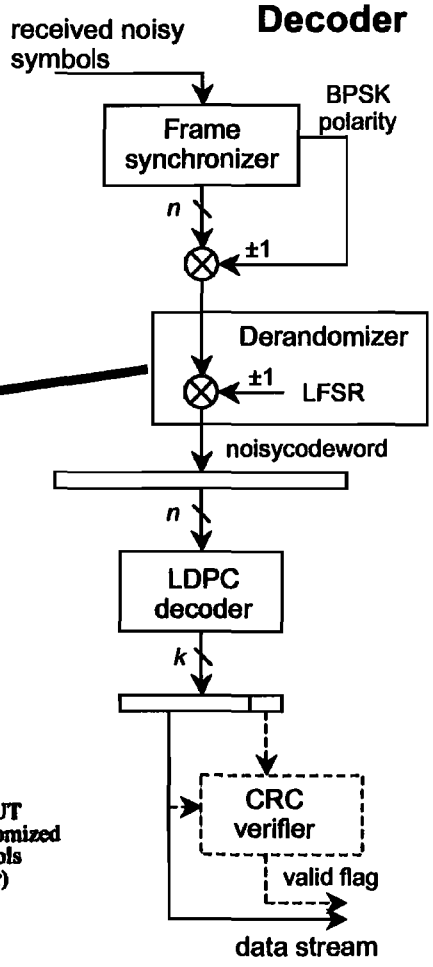

Convolutional Decoding – Revised Truncation Length Rule

Discovered surprising discrepancy with convolutional decoding

- **Commonly used rule of thumb:**

  "Set truncation depth in Viterbi algorithm equal to 5m, where m is the constraint length of the convolutional code."

  E.g., the CCSDS green book uses depth 60 for (7,1/2), (7,2/3), (7,3/4), (7,5/6), and (7,7/8) codes for its performance data

- **New (corrected) rule of thumb:**

  "Set truncation depth in Viterbi algorithm equal to 2 to 3 times m/(1-R), where m=constraint length and R = code rate."

  E.g., depth 60 is *inadequate for (7,7/8) code, and results in about a 0.5 dB loss compared to a proper truncation depth of 120:*

BACKUP SLIDES

Comparison of Three Proposed Coding System

	Power Efficiency		(code rate)	Latency (code dimension k)	Complexity /Speed		Patents	CCSDS 'Compatible'	Technology readiness/ infusion	Baseline for Constellation Program
	floor	threshold			Encoder	Decoder				
LDPC (NASA Orange Book)	$<10^{-7}$ BER	0.5–1.0 dB imperfectness	1/2,...,7/8	1K,...,16K	Ex: 360 Mbps (4K,1/2) on Xilinx Virtex2 @180MHz	Ex: 80 Mbps @ 14 iters, (1K,1/2) on 49% of Xilinx XC2V8000 @80MHz	Will be royalty free if granted	Orange Book easily converted to Blue Book	Infusion underway for MSL/MRO, compat. tests scheduled for SN	
DVB (CNES)	$<10^{-7}$ BER	?	1/4...,9/10	16K, 64K	Fast IRA encoder	Large protograph + BCH decoder	?	Codes coupled with modulations and protocol	ASICs for DVB appli-cations	
SCCC (ESA)	$<10^{-7}$ BER	?	0.36–0.90	5876–43740	Fast convo-lutional encoder		JPL patent plus others	Codes coupled with modulations		