Information-Reduced Carrier Synchronization of Iterative Decoded BPSK and QPSK Using Soft Decision (Extrinsic) Feedback*

Marvin Simon*, Esteban Valles** ,Christopher Jones*
*Jet Propulsion Laboratory, California Institute of Technology
**University of California, Los Angeles
Contact Author: Marvin.K.Simon@jpl.nasa.gov

Abstract – This paper addresses the carrier-phase estimation problem under low SNR conditions as are typical of turbo- and LDPC-coded applications. In previous publications by the first author, closed-loop carrier synchronization schemes for error-correction coded BPSK and QPSK modulation were proposed that were based on feeding back hard data decisions at the input of the loop, the purpose being to remove the modulation **prior to** attempting to track the carrier phase as opposed to the more conventional decision-feedback schemes that incorporate such feedback inside the loop. In this paper, we consider an alternative approach wherein the extrinsic soft information from the iterative decoder of turbo or LDPC codes is instead used as the feedback.

1. Introduction

In recent years there has been an ever-increasing interest in highly power efficient error-correction codes such as turbo codes and low density parity check (LDPC) codes. These codes which approach the Shannon channel capacity of the system operate at very low symbol signal-to-noise ratios (SNRs) thus necessitating the need for carrier synchronization schemes that likewise operate efficiently at these SNRs. To begin to address this issue, several years ago the notion of iterative information-reduced carrier synchronization for coded binary phase-shift-keyed (BPSK) modulation was introduced [1]. The idea behind this notion was to overcome the penalty in noisy reference loss attributed to the large squaring loss at low SNRs that is characteristic of the traditional types of BPSK carrier sync loops, e.g., the Costas or I-Q loop, by removing the modulation from the received signal *prior* to the carrier tracking process. The process by which the modulation was removed (information reduced) was envisioned as an iterative one where hard decisions on the data produced by the data detector/decoder would be fed back and applied to (multiplied by) the received signal thus improving the carrier synchronization which in turn would improve the data detector performance, hence the data decisions fed back on the next iteration, and so on. At the same time, the loop would be adapting its parameters (i.e., the loop nonlinearity in the inphase arm) to match the current fidelity of the data decision process all the while shifting its configuration from a Costas-type loop toward a phase-locked loop (PLL) in the limit of perfect detection. Several publications based on this notion appeared in the literature that included everything from the basic idea and accompanying analysis/performance evaluations [1] to successful application and implementation for specific block and convolutional codes [2,3] where improvements in loop SNR (reductions of squaring loss) on the order of 4 to 6 dB were demonstrated at very low symbol SNRs. More recently the approach was extended to QPSK modulation [4].

In the previous cases, the schemes were motivated by maximum a posteriori (MAP) estimation of carrier phase considerations based on an input consisting of a modulated (the nature of which depended on the statistics of the fed back hard decisions) carrier in Gaussian noise. In the soft decision feedback case being considered here, the extrinsic information is modeled as Gaussian [5,6,7] and thus the process of information removal produces an input to the carrier synchronizer consisting of a *pure tone* but in non-Gaussian noise (due to signal × noise and noise × noise products). This complicates the carrier phase MAP estimation problem and thus instead we propose to simply use a PLL throughout the iteration.

In Section 2, we consider BPSK modulation and derive the tracking performance of the PLL in terms of its mean-square phase error when operating in the linear (high loop SNR) region as is typical. In Section 3 we illustrate an alternative digital implementation that achieves the same performance as the piecewise constant analog model considered in Section 2. In Section 4 we present analogous results for QPSK modulation. Section 5 presents numerical results derived from a simulation of the BPSK scheme with a particular LDPC code. Finally, Section 6 documents our conclusions.

2. Tracking Performance for BPSK Modulation

With reference to Fig. 1, consider an input BPSK modulation of the form

$$y_1(t;\theta_c) = \sqrt{2P}m(t)\sin(\omega_c t + \theta_c) + n_1(t) \tag{1}$$

where $n(t)$ is a bandpass AWGN process that can be expressed as

$$n_1(t) = \sqrt{2}\left[N_{c1}(t)\cos(\omega_c t + \theta_c) - N_{s1}(t)\sin(\omega_c t + \theta_c)\right] \tag{2}$$

In (2), $N_{c1}(t), N_{s1}(t)$ have single-sided noise power spectral density (PSD) equal to N_0 and

$$m(t) = \sum_{k=-\infty}^{\infty} d_k p(t - kT_s) \tag{3}$$

is a baseband modulation with independent, identically distributed (i.i.d.) ±1 data symbols $\{d_k\}$ and unit rectangular pulse shape $p(t)$ of duration T_s. Next, delay $y_1(t;\theta_c)$ by the decoder delay Δ and multiply it by a normalized (by the signal

*The research in this paper was performed at the Jet Propulsion Laboratory, California Institute of Technology under a contract with the National Aeronautics and Space Administration.

amplitude A)[1] version of the soft decision feedback signal corresponding to the extrinsic information derived from iterative decoding of LDPC and turbo codes which can be modeled as a Gaussian signal [5,6,7], i.e.,

$$y_2(t) = m(t-\Delta) + n_2(t)/A \tag{4}$$

where $n_2(t)$ $n_2(t)$ can be modeled as a piecewise constant baseband noise process, namely,

$$n_2(t) = \sum_{k=-\infty}^{\infty} n_{2k} p(t - kT_s) \tag{5}$$

where $\{n_{2k}\}$ are i.i.d. zero mean Gaussian random variables (RVs) with variance σ^2. Over a single iteration (block of input symbols), A and σ^2 are assumed to be fixed. The result of this multiplication, whose intent is to remove the modulation, is

$$\begin{aligned} u(t;\theta_c) &\triangleq y_1(t-\Delta;\theta_c) y_2(t) = \sqrt{2P}\sin(\omega_c t + \theta_c) \\ &+ \left(\sqrt{2P}/A\right) m(t-\Delta) n_2(t) \sin(\omega_c t + \theta_c) \\ &+ \sqrt{2} m(t-\Delta)\left[N_{c1}(t)\cos(\omega_c t + \theta_c) - N_{s1}(t)\sin(\omega_c t + \theta_c)\right] \\ &+ \left(\sqrt{2}/A\right) n_2(t)\left[N_{c1}(t)\cos(\omega_c t + \theta_c) - N_{s1}(t)\sin(\omega_c t + \theta_c)\right] \end{aligned} \tag{6}$$

which is the sum of a pure sinusoidal tone at the carrier frequency plus a mixture of signal × noise and noise × noise terms. The signal in (6) is then input to a PLL whose voltage-controlled oscillator (VCO) output can be expressed as

$$r_c(t) = \sqrt{2}\cos\left(\omega_c t + \hat{\theta}_c\right) \tag{7}$$

then the demodulated signal becomes

$$\begin{aligned} z(t) &= \sqrt{P}\sin\phi_c + \left(\sqrt{P}/A\right) m(t-\Delta) n_2(t)\sin\phi_c + m(t-\Delta) \\ &\times\left[N_{c1}(t)\cos\phi_c - N_{s1}(t)\sin\phi_c\right] + (1/A) n_2(t) \\ &\times\left[N_{c1}(t)\cos\phi_c - N_{s1}(t)\sin\phi_c\right] \triangleq \sqrt{P}\sin\phi_c + v(t,\phi_c) \end{aligned} \tag{8}$$

where $\phi_c \triangleq \theta_c - \hat{\theta}_c$ denotes the phase error in the loop. Note that the loop tracks the phase error ϕ_c as opposed to twice the phase error $2\phi_c$ as in the more conventional Costas loop. Thus, differential encoding of the data is not necessary to resolve a phase ambiguity.

Next we pass $z(t)$ through a matched filter (I&D) to produce (in the kth interval $(k+1)T_s \le t \le (k+2)T_s$) the piecewise constant error signal[2]

$$\begin{aligned} e_k &= \int_{kT_s}^{(k+1)T_s} z(t)dt = T_s\sqrt{P}\sin\phi_c + \left(\sqrt{P}/A\right) T_s d_k n_{2k}\sin\phi_c \\ &+ d_k\left[N_{c1k}\cos\phi_c - N_{s1k}\sin\phi_c\right] + (1/A) n_{2k}\left[N_{c1k}\cos\phi_c \right. \\ &\left. - N_{s1k}\sin\phi_c\right] = T_s\sqrt{P}\sin\phi_c + v(k,\phi_c) \end{aligned} \tag{9}$$

where

$$N_{c1k} = \int_{kT_s}^{(k+1)T_s} N_{c1}(t)dt,\ N_{s1k} = \int_{kT_s}^{(k+1)T_s} N_{s1}(t)dt \tag{10}$$

are zero mean Gaussian noise RVs with variance $\sigma_N^2 = N_0 T_s/2$. Clearly from the above, the slope of the S-curve, K_g, is given by

$$K_g = T_s\sqrt{P} \tag{11}$$

We now compute the autocorrelation function of $v(k,\phi_c)$ (treated as a piecewise continuous process $v(t,\phi_c)$) from which we shall obtain the equivalent noise PSD affecting the loop. For operation in the neighborhood of $\phi_c = 0$, it is reasonable to consider only the autocorrelation function of $v(k,0)$. Assuming $n_1(t)$ and $n_2(t)$ are independent and the noise samples are independent from symbol interval to symbol interval, then the autocorrelation is triangular

$$R_v(\tau) = E\{v(t,0)v(t+\tau,0)\} = \begin{cases} \sigma_v^2\left(1 - \dfrac{|\tau|}{T_s}\right), |\tau| \le T_s \\ 0, \text{otherwise} \end{cases} \tag{12}$$

with

$$\sigma_v^2 = E\left\{v^2(k,0)\right\} = \sigma_N^2\left(1 + \sigma^2/A^2\right) = \frac{N_0 T_s}{2}\left(1 + \sigma^2/A^2\right) \tag{13}$$

Thus, the equivalent single-sided noise PSD, N_e, is given by

$$N_e = 2\int_{-\infty}^{\infty} R_v(\tau,0)d\tau = N_0 T_s^2\left(1 + \sigma^2/A^2\right) \tag{14}$$

Finally, the mean-square phase error in the loop is given by

$$\begin{aligned} \sigma_{\phi_c}^2 &= \frac{N_e B_L}{K_g^2} = \frac{N_0 T_s^2\left(1 + \sigma^2/A^2\right) B_L}{\left(T_s\sqrt{P}\right)^2} \\ &= \frac{N_0 B_L}{P}\left(1 + \frac{\sigma^2}{A^2}\right) \triangleq \frac{1}{\rho S_L} \end{aligned} \tag{15}$$

where $\rho = P/\left(N_0 B_L\right)$ is the loop SNR in a conventional PLL and

$$S_L \triangleq \left(1 + \sigma^2/A^2\right)^{-1} \tag{16}$$

is the degradation of the loop SNR analogous to the "squaring loss" in a conventional Costas loop. The quantity A^2/σ^2 represents the *extrinsic SNR*. For iterative decoding of LDPC and turbo codes, the ratio of the mean to variance of the extrinsic is given by $A/\sigma^2 = 1/2$ [5,6,7], or equivalently, the extrinsic SNR is equal to $A/2$ and thus (16) becomes

$$S_L \triangleq (1 + 2/A)^{-1} \tag{17}$$

As the iteration proceeds, the extrinsic SNR increases and likewise the squaring loss decreases (i.e., S_L approaches unity). By comparison, for a Costas loop, the expression for the squaring loss is given by

$$S_L \triangleq \left[1 + 1/\left(2R_d\right)\right]^{-1},\quad R_d = PT_s/N_0 \tag{18}$$

---

[1] The purpose of the normalization is to make the signal component of the feedback independent of the extrinsic information amplitude, A. This in turn results in the input to the carrier tracking loop being independent of this same amplitude thereby not affecting the choice of the loop bandwidth. In practice, one would need to estimate A per iteration to perform this normalization. For the purpose of our theoretical discussion here, we shall assume that this estimation is perfect.

[2] Without loss in generality, we herein ignore the decoder delay Δ.

and thus remains fixed, independent of the iteration process, for a given symbol SNR. To numerically evaluate the performance in (17), one needs to quantify the functional dependence of the extrinsic SNR on the input symbol SNR.

3. An Alternative Digital Approach

With reference to Fig. 2, suppose now we first demodulate (convert to baseband) the input signal of (1) with the I and Q reference signals (arbitrarily assuming them to have zero phase relative to the received signal)

$$r_c(t) = \sqrt{2}\cos\omega_c t,\ r_s(t) = \sqrt{2}\sin\omega_c t \tag{19}$$

to obtain

$$\begin{aligned} x_c(t;\theta_c) &= \sqrt{P}m(t)\sin\theta_c + N_{c1}(t)\cos\theta_c - N_{s1}(t)\sin\theta_c \\ x_s(t;\theta_c) &= \sqrt{P}m(t)\cos\theta_c - N_{c1}(t)\sin\theta_c - N_{s1}(t)\cos\theta_c \end{aligned} \tag{20}$$

The demodulated signals are then passed through I&Ds to give

$$\begin{aligned} z_{ck} &= \int_{kT_s}^{(k+1)T_s} x_c(t;\theta_c)dt = \sqrt{P}T_s d_k \sin\theta_c \\ &+ N_{c1k}\cos\theta_c - N_{s1k}\sin\theta_c \\ z_{sk} &= \int_{kT_s}^{(k+1)T_s} x_s(t;\theta_c)dt = \sqrt{P}T_s d_k \cos\theta_c \\ &- N_{c1k}\sin\theta_c - N_{s1k}\cos\theta_c \end{aligned} \tag{21}$$

in the interval $(k+1)T_s \le t \le (k+2)T_s$. Next multiply z_{ck} and z_{sk} by the normalized soft decision feedback sample (decoder extrinsic information)

$$y_{2k} = d_k + n_{2k}/A \tag{22}$$

where as before over a given iteration $\{n_{2k}\}$ are modeled as i.i.d. zero mean Gaussian RVs with variance σ^2. The result of this multiplication removes the modulation and produces

$$\begin{aligned} u_{ck} &= T_s\sqrt{P}\sin\theta_c + d_k\left[N_{c1k}\cos\theta_c - N_{s1k}\sin\theta_c\right] \\ &+ \left(\sqrt{P}/A\right)T_s d_k n_{2k}\sin\theta_c + (1/A)n_{2k}\left[N_{c1k}\cos\theta_c\right. \\ &\left. - N_{s1k}\sin\theta_c\right] = \sqrt{P}T_s\sin\theta_c + v_{ck} \\ u_{sk} &= T_s\sqrt{P}\cos\theta_c + d_k\left[-N_{c1k}\sin\theta_c - N_{s1k}\cos\theta_c\right] \\ &+ \left(\sqrt{P}/A\right)T_s d_k n_{2k}\cos\theta_c + (1/A)n_{2k}\left[-N_{c1k}\sin\theta_c\right. \\ &\left. - N_{s1k}\cos\theta_c\right] = \sqrt{P}T_s\cos\theta_c + v_{sk} \end{aligned} \tag{23}$$

which is then input to a digital PLL whose number-controlled oscillator (NCO) produces an estimate of the carrier phase denoted by $\hat{\theta}_c$. Multiplying u_{ck} and u_{sk} by $w_{ck} = \cos\hat{\theta}_c$ and $w_{sk} = \sin\hat{\theta}_c$, respectively, and then differencing the results of these products provides the error signal

$$\begin{aligned} e_k &= u_{ck}w_{ck} - u_{sk}w_{sk} = T_s\sqrt{P}\sin\phi_c + v_{ck}\cos\hat{\theta}_c - v_{sk}\sin\hat{\theta}_c \\ &= T_s\sqrt{P}\sin\phi_c + d_k\left[N_{c1k}\cos\phi_c - N_{s1k}\sin\phi_c\right] + \left(\sqrt{P}/A\right)T_s \\ &\times d_k n_{2k}\sin\phi_c + (1/A)n_{2k}\left[N_{c1k}\cos\phi_c - N_{s1k}\sin\phi_c\right] \end{aligned} \tag{24}$$

where as before $\phi_c \triangleq \theta_c - \hat{\theta}_c$ denotes the phase error in the loop. Comparing (24) with (9) we see that they are identical and thus the performance of the digital PLL would also be described by (15) together with (16).

4. Tracking Performance for QPSK Modulation

With reference to Fig. 3, consider an input QPSK modulation of the form

$$\begin{aligned} y_1(t;\theta_c) &= \sqrt{P}m_I(t)\sin(\omega_c t + \theta_c) \\ &+ \sqrt{P}m_Q(t)\cos(\omega_c t + \theta_c) + n_{1I}(t) \end{aligned} \tag{25}$$

where, analogous to (2), the noise is modeled by

$$n_{1I}(t) = \sqrt{2}\left[N_{c1}(t)\cos(\omega_c t + \theta_c) - N_{s1}(t)\sin(\omega_c t + \theta_c)\right] \tag{26}$$

and the I and Q modulations are given by

$$m_I(t) = \sum_{k=-\infty}^{\infty} d_{Ik}p(t - kT_s),\quad m_Q(t) = \sum_{k=-\infty}^{\infty} d_{Qk}p(t - kT_s) \tag{27}$$

As before, multiply $y_{1I}(t;\theta_c)$ (again ignoring the decoder delay) by a normalized version of the soft decision feedback signal corresponding to the extrinsic information for the I data stream, namely,

$$y_{2I}(t) = m_I(t) + n_{2I}(t)/A \tag{28}$$

where $n_2(t)$ is again modeled as a piecewise constant baseband noise process, namely,

$$n_{2I}(t) = \sum_{k=-\infty}^{\infty} n_{2Ik}p(t - kT_s) \tag{29}$$

with $\{n_{2Ik}\}$ being i.i.d. zero mean Gaussian RVs with variance σ^2.

Now also phase shift the received signal by $\pi/2$ rad. to form the quadrature input

$$\begin{aligned} y_1(t;\theta_c - \pi/2) &= -\sqrt{P}m_I(t)\cos(\omega_c t + \theta_c) \\ &+ \sqrt{P}m_Q(t)\sin(\omega_c t + \theta_c) + n_{1Q}(t) \end{aligned} \tag{30}$$

where

$$n_{1Q}(t) = \sqrt{2}\left[N_{c1}(t)\sin(\omega_c t + \theta_c) + N_{s1}(t)\cos(\omega_c t + \theta_c)\right] \tag{31}$$

and multiply this by a normalized version of the extrinsic information for the Q data stream, namely,

$$y_{2Q}(t) = m_Q(t) + n_{2Q}(t)/A \tag{32}$$

where, analogous to (29),

$$n_{2Q}(t) = \sum_{k=-\infty}^{\infty} n_{2Qk}p(t - kT_s) \tag{33}$$

and the sequence $\{n_{2Qk}\}$ is assumed to have the same properties as the sequence $\{n_{2Ik}\}$. Furthermore, it is reasonable to assume the two sequences independent of each other. The results of the above-mentioned multiplications are given by

$$\begin{aligned} u_I(t;\theta_c) &= \sqrt{P}\sin(\omega_c t + \theta_c) + \sqrt{P}m_I(t)m_Q(t)\cos(\omega_c t + \theta_c) \\ &+ \left(\sqrt{P}/A\right)m_I(t)n_{2I}(t)\sin(\omega_c t + \theta_c) \\ &+ \left(\sqrt{P}/A\right)m_Q(t)n_{2I}(t)\cos(\omega_c t + \theta_c) \\ &+ \sqrt{2}m_I(t)\left[N_{c1}(t)\cos(\omega_c t + \theta_c) - N_{s1}(t)\sin(\omega_c t + \theta_c)\right] \\ &+ \left(\sqrt{2}/A\right)n_{2I}(t)\left[N_{c1}(t)\cos(\omega_c t + \theta_c) - N_{s1}(t)\sin(\omega_c t + \theta_c)\right] \end{aligned} \tag{34}$$

and

$$u_Q(t;\theta_c) = \sqrt{P}\sin(\omega_c t + \theta_c) - \sqrt{P} m_I(t) m_Q(t)\cos(\omega_c t + \theta_c)$$
$$-(\sqrt{P}/A) m_I(t) n_{2Q}(t)\cos(\omega_c t + \theta_c)$$
$$+(\sqrt{P}/A) m_Q(t) n_{2Q}(t)\sin(\omega_c t + \theta_c)$$
$$+\sqrt{2} m_Q(t)\left[N_{c1}(t)\sin(\omega_c t + \theta_c) + N_{s1}(t)\cos(\omega_c t + \theta_c)\right] \quad (35)$$
$$+(\sqrt{2}/A) n_{2Q}(t)\left[N_{c1}(t)\sin(\omega_c t + \theta_c) + N_{s1}(t)\cos(\omega_c t + \theta_c)\right]$$

Adding $u_I(t;\theta_c)$ and $u_Q(t;\theta_c)$ eliminates the cross-modulation signal term and produces a signal that is again the sum of a pure sinusoidal tone at the carrier frequency plus a mixture of signal $\times$ noise and noise $\times$ noise terms.

The signal $u(t;\theta_c)$ is input to a PLL which after demodulation by the reference signal in (7) gives

$$z(t) = \sqrt{2P}\sin\phi_c + (\sqrt{P/2}/A)\left[m_I(t) n_{2I}(t) + m_Q(t) n_{2Q}(t)\right]\sin\phi_c$$
$$+(\sqrt{P/2}/A)\left[m_Q(t) n_{2I}(t) - m_I(t) n_{2Q}(t)\right]\cos\phi_c$$
$$+\left[m_I(t) N_{c1}(t) + m_Q(t) N_{s1}(t)\right]\cos\phi_c + \left[m_Q(t) N_{c1}(t)\right.$$
$$\left.-m_I(t) N_{s1}(t)\right]\sin\phi_c + (1/A)\left[n_{2I}(t) N_{c1}(t) + n_{2Q}(t) N_{s1}(t)\right]\cos\phi_c$$
$$+(1/A)\left[n_{2Q}(t) N_{c1}(t) - n_{2I}(t) N_{s1}(t)\right]\sin\phi_c \quad (36)$$

As in the BPSK case, next we pass $z(t)$ through an I&D to produce (in the kth interval $(k+1)T_s \le t \le (k+2)T_s$) the piecewise constant error signal

$$e_k = \int_{kT_s}^{(k+1)T_s} z(t)dt = T_s\sqrt{2P}\sin\phi_c + (\sqrt{P/2}/A) T_s\left[d_{Ik} n_{2Ik}\right.$$
$$\left.+d_{Qk} n_{2Qk}\right]\sin\phi_c + (\sqrt{P/2}/A) T_s\left[d_{Qk} n_{2Ik} - d_{Ik} n_{2Qk}\right]\cos\phi_c$$
$$+\left[d_{Ik} N_{c1k} + d_{Qk} N_{s1k}\right]\cos\phi_c + \left[d_{Qk} N_{c1k} - d_{Ik} N_{s1k}\right]\sin\phi_c$$
$$+(1/A)\left[n_{2Ik} N_{c1k} + n_{2Qk} N_{s1k}\right]\cos\phi_c + (1/A)\left[n_{2Qk} N_{c1k}\right.$$
$$\left.-n_{2Ik} N_{s1k}\right]\sin\phi_c = T_s\sqrt{2P}\sin\phi_c + v(k,\phi_c) \quad (37)$$

where N_{c1k}, N_{s1k} are defined in (10).

Once again we must compute the slope of the S-curve and the equivalent noise PSD. From (37), the slope of the S-curve is immediately given by

$$K_g = T_s\sqrt{2P} \quad (38)$$

The variance of the additive noise $v(k,0)$ is readily determined to be[3]

$$\sigma_v^2 = N_0 T_s\left[1 + (1+R_d)\sigma^2/A^2\right] \quad (39)$$

and thus from (14), the equivalent noise PSD is

$$N_e = 2T_s\sigma_v^2 = 2N_0 T_s^2\left[1 + (1+R_d)\sigma^2/A^2\right] \quad (40)$$

Finally, applying (38) and (40) to (15), the mean-square phase error in the loop becomes

$$\sigma_{\phi_c}^2 = \frac{N_e B_L}{K_g^2} = \frac{N_0 B_L}{P}\left[1 + (1+R_d)\frac{\sigma^2}{A^2}\right] \triangleq \frac{1}{\rho S_L} \quad (41)$$

or equivalently, the "squaring loss" is given by

$$S_L = \left[1 + (1+R_d)\sigma^2/A^2\right]^{-1} \quad (42)$$

which applying $A/\sigma^2 = 1/2$ simplifies to

$$S_L = \left[1 + (1+R_d)(2/A)\right]^{-1} \quad (43)$$

Comparing (43) with (17) we immediately observe the additional penalty (dependent now on symbol SNR R_d) in carrier tracking performance using a PLL for QPSK relative to BPSK. For small symbol SNRs, this penalty becomes mute. Furthermore, note that because of the creation of a pure tone by the soft decision feedback, thus allowing the use of a PLL, there are no fourth order $S \times N$ or $N \times N$ products in the loop as in the conventional QPSK Costas loop or information-reduced carrier synchronization loop with hard decision feedback. Thus, the "squaring loss" penalty is inherently smaller than the "quadrupling loss" penalty associated with the above-mentioned loops.

As was the case for BPSK, it is also possible to construct an alternative digital implementation that once again would yield the same performance as its piecewise continuous analog counterpart discussed above.

5. Iterative Processing and Numerical Results

We have evaluated the performance of the all-digital BPSK baseband approach described in section 3 via joint decoding with an irregular $(n,k) = (1944, 972)$ low-density parity-check (LDPC) code developed in [8]. After a complex rotation to resolve phase ambiguity (discussed below), the signals z_{ck} and z_{sk} are multiplied by the decoder output y_{2k} to form u_{sk} and u_{ck}. As described in previous sections and shown in [1], if the PLL input has a small fraction of total modulated symbols in a block successfully removed then it can begin to produce a reasonable phase estimate, even at relatively low SNRs. We have found that the estimation/decoding process can be successfully started by assigning $y_{2k} = z_{sk}$ (Subsequent iterations derive y_{2k} from decoder as described by (22)). After this assignment, the PLL operates once across all symbols in a codeword. LDPC decoder log-likelihood ratio inputs are then produced by combining the updated PLL phase estimates with z_{sk} and z_{ck}

$$Q_k = \frac{2}{\sigma_{llr}^2}\left(z_{sk} w_{ck} + z_{ck} w_{sk}\right) = \frac{2}{\sigma_{llr}^2}\left(\sqrt{P} T_s d_k \cos\phi_c - N_{c1k}\sin\phi_c - N_{s1k}\cos\phi_c\right) \quad (44)$$

where $\sigma_{llr}^2 = PT_s^2/(2E_s/N_0)$.

An 'extrinsic' LLR feedback mechanism was employed in which prior LDPC inputs are subtracted from current outputs before new inputs (from the most recent PLL update) are added. Also, state information in the decoder (in particular the most recent extrinsic information arriving from check-nodes) is preserved between LDPC-to-PLL-to-LDPC iterates. The accumulator in Fig. 2 implements the first order transfer function

[3] The additional noise variance factor $(1+R_d)$ comes from the presence of a quadrature signal $\times$ noise term that is absent in the BPSK case.

$$H(z) = \frac{K_p + K_i z^{-1}}{1 - z^{-1}} \tag{45}$$

where $K_p = 10^{-6}$ and $K_i = 10^{-8}$ were selected.

The bit and frame error rate performance of the system are shown in Fig. 4 for different update schedules between the decoder and the PLL circuit and for two cases of initial phase error ϕ_c. Simulations with $\phi_c = 0$ and $\phi_c = \pi/4$ represent cases of maximum and minimum initial phase error. Cases with $\phi_c = 0$ are not shown in the figure since they always achieve the same performance as the stand-alone code. All other initial phase offsets have error rate performance that lies between these two cases. The total number of LDPC iterations was set to either 20 or 50. The set of curves labeled (20-20) and (50-50) shows the error rate performance when a decoder iteration is followed by a PLL update. An alternative schedule (20-10) and (50-25) where a PLL update is done after two decoder iterations is also shown.

A plot of loop SNR ($1/\sigma_{\phi_c}^2$) as a function of the number of iterations where $\phi_c = 0$ and $\phi_c = \pi/4$ is shown in Fig. 5 in conjunction with the (50-25) scheduling case. Steady state operation is reached after 40 iterations for the $\phi_c = 0$ scenarios and after 50 iterations when $\phi_c = \pi/4$. In addition, Fig. 5 shows that in the case of 20 iterations (for either initial phase offset) the PLL has not reached steady state. The associated loss in performance is shown in Fig. 4 where at a frame error rate of 10^{-3} the (20-10) schedule loses 0.15 dB and the (20-20) schedule loses 0.07 dB.

We conclude this section by noting that phase ambiguity (for offsets greater than $\pm\pi/2$) can be resolved by first measuring the average power across a single codeblock of the signals z_c and z_s. If the sine component (z_c) has average power greater than the cosine component (z_s), then these two components are swapped. This procedure may leave (or induce) a remaining error of π radians. To resolve this ambiguity a single PLL pass followed by several (up to 4) LDPC iterations are run. The orientation that produces the maximum number of satisfied odd-degree check equations is selected and the decoding procedure is reinitialized.

6. Conclusions

We have demonstrated a means for improving the carrier synchronization function for iterative decoded BPSK and QPSK using information derived from the decoder extrinsics to remove the modulation (information-reduction) prior to the carrier tracking operation. The motivation for doing such is to overcome the penalty in noisy reference loss attributed to the large squaring/quadrupling loss at low SNRs that is characteristic of the traditional types of BPSK/QPSK carrier sync loops such as the Costas-type loop. In comparison to the information-reduced carrier synchronization loop with hard decision feedback as proposed in Refs. 1 and 4, the scheme described in this paper that makes use of soft decision extrinsic information does not require estimating the decoder error probability. This occurs as a consequence of the assumption here of a fixed carrier synchronization structure, i.e., a PLL, whose design does not change with knowledge obtained from the decoder. While in the soft decision feedback case considered here such a structure would only be asymptotically optimum (in the MAP motivation sense) at high SNR, it nevertheless provides a simple yet performance efficient carrier synchronization loop in SNR regions of interest for coded applications.

References

1. M. K. Simon and V. A. Vilnrotter, "Iterative information-reduced carrier synchronization using decision feedback for low SNR applications," TDA Progress Report 42-130, http://www.tmo.jpl.nasa.gov/progress_report, August 15, 1997.
2. V. Vilnrotter, A. Gray and C. Lee, "Carrier synchronization for low signal-to-noise ratio binary phase-shift-keyed modulation signals," TMO Progress Report 42-139, http://www.tmo.jpl.nasa.gov/progress_report, November 15, 1999.
3. V. Vilnrotter, C. Lee and N. Lay, "A generalized pre-processor for block and convolutionally coded signals," TMO Progress Report 42-144, http://www.tmo.jpl.nasa.gov/progress_report, February 15, 2001.
4. M. K. Simon, A. Tkacenko, "An iterative information-reduced QPSK carrier synchronization scheme using decision feedback for low SNR applications," IPN Progress Report 42-164, http://www.tmo.jpl.nasa.gov/progress_report, February 15, 2006.
5. S.Y.Chung, T.J.Richardson, R.Urbanke, "Analysis of sum-product decoding of low-density parity-check codes using a Gaussian approximation," *IEEE Trans. Info. Theory*, vol. 47, Feb. 2001, pp. 657-670.
6. T.J.Richardson, A.Shokrollahi, R.Urbanke, "Design of capacity approaching low-density parity-check codes," *IEEE Trans. Info. Theory*, vol. 47, Feb. 2001, pp. 619-637.
7. D. Divsalar, S. Dolinar and F. Pollara, "Iterative turbo decoder analysis based on density evolution," *IEEE Selected Areas Commun.*, vol. 19, no. 5, May 2001, pp. 891–907.
8. A. Casado, W. Weng, R. Wesel, "Multiple rate low-density parity-check codes with constant blocklength," *Proceedings of the 38th Asilomar Conference*, Nov. 7-10, 2004, vol. 2, pp. 2010 – 2014.

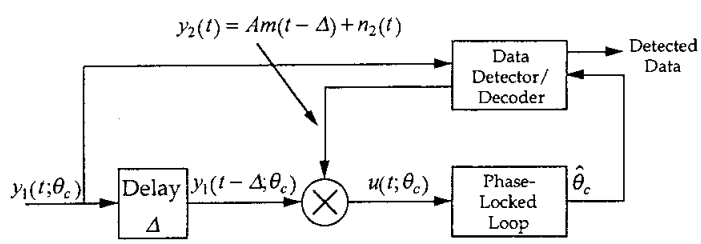

Fig. 1. Receiver with Information-Reduced Carrier Synchronizer Using Soft Decision Feedback for BPSK

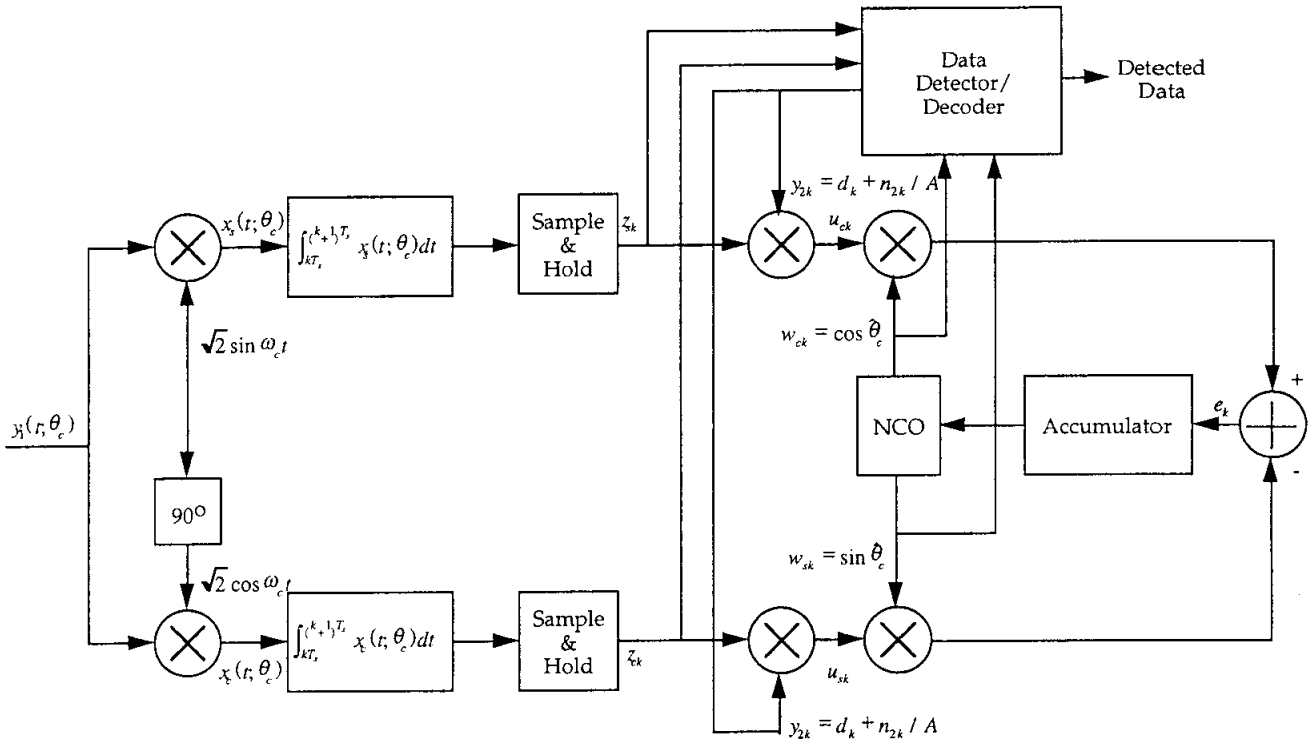

Fig. 2. Digital Implementation of BPSK Information-Reduced Carrier Synchronization Loop Using Soft Decision Feedback

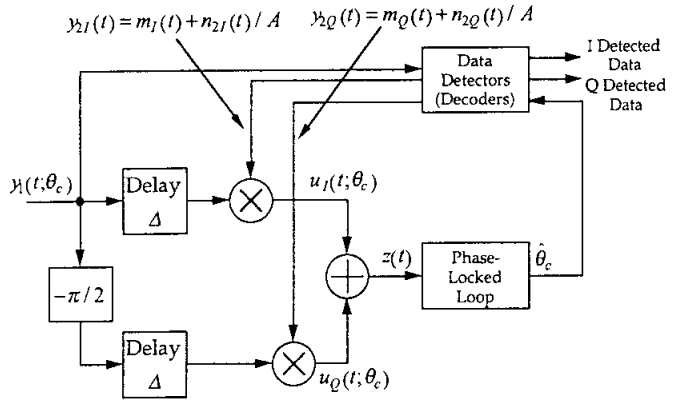

Fig. 3. QPSK Receiver with Information-Reduced Carrier Phase Synchronizer Using Soft Decision Feedback.

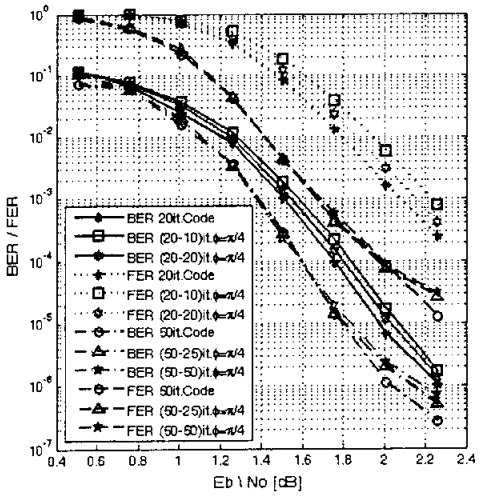

Fig. 4. BER /FER system performance

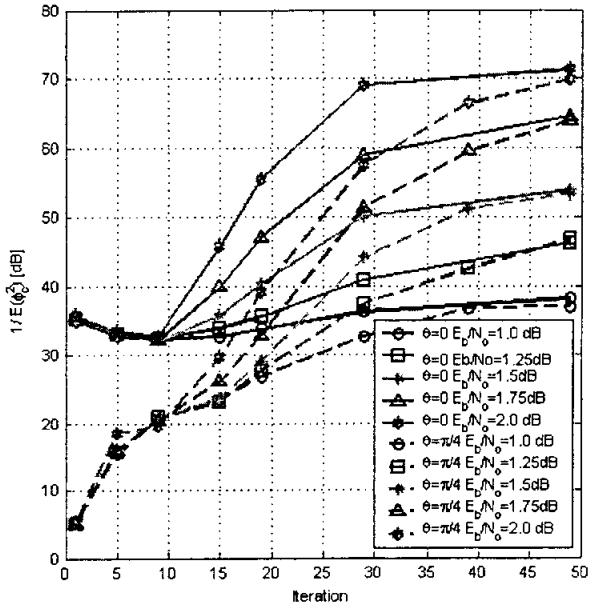

Fig. 5. Loop SNR performance for (50-25) scheduling.