Airborne Optical Communications Demonstrator Design and Pre-flight Test Results

A. Biswas, N. Page, J. Neal, D. Zhu, M. Wright, G. G. Ortiz, W. H. Farr, H. Hemmati

Jet Propulsion Laboratory, California Institute of Technology, 4800 Oak Grove Drive, Pasadena, CA 91109

ABSTRACT

A second generation optical communications demonstrator (OCD-2) intended for airborne applications like air-to-ground and air-to-air optical links is under development at JPL. This development provides the capability for unidirectional high data rate (2.5-Gbps) transmission at 1550-nm, with the ability to receive an 810-nm beacon to aid acquisition pointing and tracking. The transmitted beam width is nominally 200-μrad. A 3x3 degree coarse field-of-view (FOV) acquisition sensor with a much smaller ~3-mrad FOV tracking sensor is incorporated. The OCD-2 optical head will be integrated to a high performance gimbal turret assembly capable of providing pointing stability of 5-microradians from an airborne platform. Other parts of OCD-2 include a cable harness, connecting the optical head in the gimbal turret assembly to a rugged electronics box. The electronics box will house: command and control processors, laser transmitter, data-generation-electronics, power conversion/distribution hardware and state-of-health monitors. The entire assembly will be integrated and laboratory tested prior to a planned flight demonstrations.

Keywords: Free-space, optical communications, lasercom, airborne terminal

1. INTRODUCTION

High definition television (HDTV) cameras, hyper-spectral sensors and synthetic aperture radar (SAR) are examples of airborne instruments suitable for high resolution imagery applicable to scientific, military and surveillance operations. In many future applications near-real-time transfer of the huge data volumes generated by these airborne sensors will greatly enhance their capability and usage. Free-space laser communications holds the promise of providing this capability at multi-Gbps data rates.

Laser communications requires clear optical line-of-sight between transmitter and receiver. Given the distinct probability of line-of-sight blockage due to clouds or other obstructions, multiple redundant data transfer pathways supported by a network of airborne, ground and satellite assets is desired for a reliable data service. Air-to-ground, air-to-air, and air-to-satellite optical links will be required to support such a network.

This paper deals with one of the building blocks of such a high bandwidth optical communications network, namely, the laser communications terminal for the airborne node. This paper describes ongoing development at JPL to design, build and test an airborne laser communications terminal. Section 2 below briefly discusses the high level design drivers for an airborne terminal. Section 3 describes the approach followed at JPL with test results for the optical head of the terminal. Section 4 presents a progress report on the development of peripheral hardware required to interface the lasercom terminal to an airborne platform. Section 5 provides a summary with future plans.

2. AIRBORNE LASERCOM TERMINAL DESIGN DRIVERS

The airborne lasercom terminal design is driven by the desire to consider each airborne platform as a node in a network comprised of other airborne, space and ground assets. Figure 1 is a simplified depiction of such an optical network. This article addresses terminals required for the airborne nodes of the network. Moreover, as shown in Figure 1 the airborne platforms considered in this article presume unmanned aerial vehicles (UAV's), based on the critical role they are expected to play in future networks. Typical applications will involve airborne sensors acquiring high resolution imagery with the need to transfer data in near real time to a centralized location somewhere on the ground. In the event of cloud or other line-of-sight blockage the data can be routed through air-to-air-to-ground or air-to-space-to-ground pathways.

For correspondence: abiswas@jpl.nasa.gov

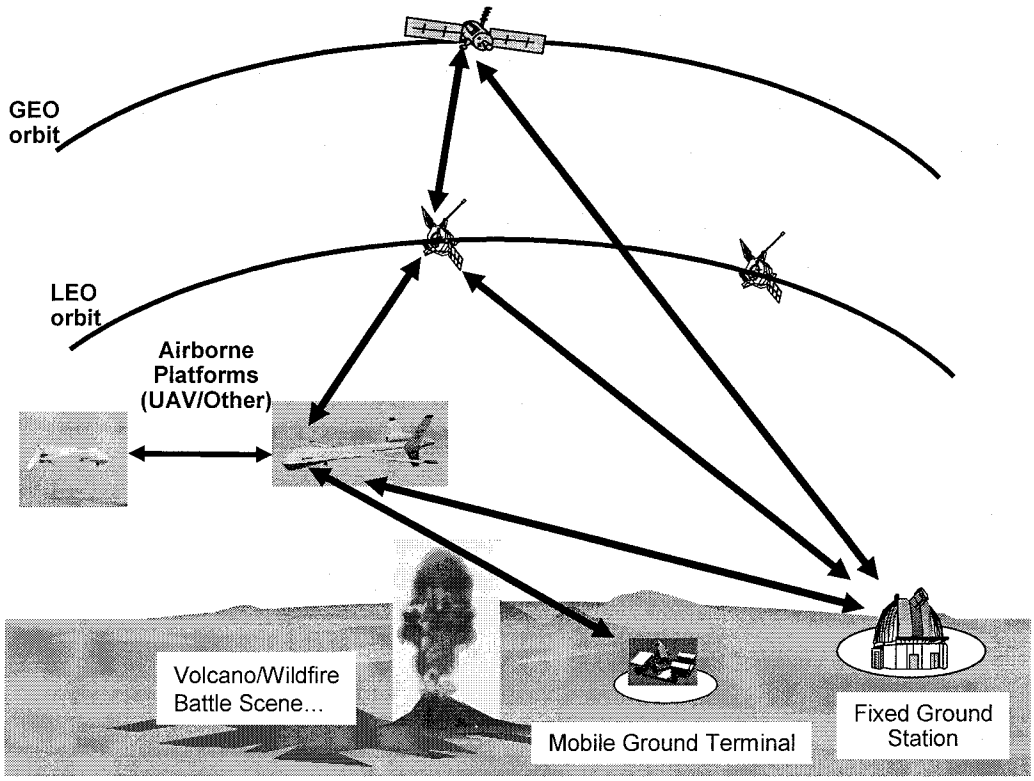

Figure 1 Conceptual view of optical links in a network that can provide redundant data transfer pathways for a robust and reliable and high bandwidth service

Figure 1 illustrates that for an effective network the airborne terminal should have a high data rate receive and transmit capability. In addition to receiving high rate data, the capability of utilizing the received beam as a pointing reference or "beacon" will facilitate closed loop control for high accuracy pointing of the laser beam used to transmit data. Finally, two communicating terminals exchanging laser beams can be used to implement a scheme for acknowledging receipt, or requesting re-transmission, of data packets.

A control system to compensate the transmitted laser beam pointing for disturbances caused by airborne platform attitude uncertainty and vibrations is central to effective terminal design. Conventionally this is achieved by the transmitting terminal searching and acquiring a beacon laser from the receiver. Onboard or dedicated GPS/INS can be used to assist this search and acquisition. The acquisition FOV must be several times larger than the combination of airborne platform attitude uncertainty and the blind-point accuracy of the terminal. Once acquired, active beacon sensing by the airborne terminal control system tracks out disturbances associated with air platform vibrations, as well as, relative motion between the terminal and receiver. Note that for initial acquisition a large FOV is desired, whereas for tracking a smaller FOV provides finer pointing accuracy.

For airborne terminals to optically communicate with receivers located in the air, ground or space, the ability to negotiate horizontal, downward and upward slant paths is required. This raises the interesting question about where on the airborne platform to locate the terminal. This in turn is constrained by the mass, and volume of the optical terminal. We leave this issue for the topic of future work and present what is primarily an air-to-ground configuration that can be extended to some air-to-air links. The optical link configuration and mission plan adapted for performing the air-to-ground demonstration is described in reference 1. This demonstration will serve as a significant stepping stone for advancing future developments of the airborne node in optical networks.

3. DEVELOPMENT APPROACH FOR AIRBORNE TERMINAL

The approach for developing an airborne optical communications terminal was motivated by the desire to perform a quick-turn-around link demonstration. The philosophy adapted was that early lessons learned through a cost-effective demonstration will advance the technology faster in the long run.

The terminal was developed by making minimal modifications to an existing NASA/JPL patented[2] optical communications demonstrator (OCD) that was developed as a laboratory prototype of a deep space optical communications terminal and subsequently tested[3,4] in the laboratory and field. The major design modifications to OCD in the development of the airborne terminal hitherto referred to as OCD-2 are listed below:

1. Changed optical design to allow 1550-nm laser transmission instead of 830-860 nm in the original OCD.
2. Changed the beacon receive wavelength from 780-nm to 810-nm.
3. Made the following changes to accommodate OCD-2 on an airborne platform
    a. Widened the transmitted beam divergence from 22- to approximately 200-μrad.
    b. Maximized the tracking FOV to 3.25 x 2.45-mrad from 1 x 1-mrad.
    c. Added a wide co-bore sighted 3 x 3 degree FOV acquisition channel.
    d. Provided interface to an airborne gimbal turret assembly with associated cable wrap.

The OCD piece parts affected by the modifications listed above were re-designed whereas the remaining mechanical drawings were re-fabricated. This greatly cut short design time and allowed completion of all fabrication in 4-months.

Figure 2 shows the optical layout of the main OCD-2 optical head. Co-bore-sighted to this assembly is wide FOV acquisition channel that is not shown in Figure 2. The main OCD-2 instrument has the following four optical functions:

1) Transmits a 1550-nm optical communication laser beam to a ground station receiver while precisely controlling aiming of the beam to the ground station utilizing an internal fast steering mirror (FSM).
2) Receives an uplink beacon from the ground station and images and tracks the beam with a NFOV (narrow field of view) charge coupled device (CCD) camera.
3) Internally references the relative bore-sight between the transmit beam and the uplink beacon receive beam.
4) Images the uplink beacon for acquisition and tracking purposes using a separate externally mounted and bore-sighted WFOV (wide field of view) CCD camera (not shown in Figure 2).

3.1 Transmit Channel

The transmit channel is made up of six optical subsystems as follows:

1) A laser coupled single mode 1550-nm optical fiber with a multiplexed 980-nm fiber channel.
2) A two element fiber coupler optic.
3) A FSM.
4) A collimator doublet.
5) A beam-splitter.
6) A two mirror afocal telescope.

The transmit channel is shown in Figure 3. The single mode 1550-nm radiation emitted from the laser coupled optical fiber is matched to the OCD-2 optical system using a two element coupler optical assembly in a manner that results in sub-aperture transmission. Following the coupler optical assembly the beam is reflected from the FSM located at a conjugate plane and imaged at the collimator doublet focal plane. The collimator doublet collimates the beam which then passes through a beam-splitter and into an afocal telescope where the beam is magnified ten-fold. The beam-splitter separates the 980-nm reference beam from the 1550-nm transmit beam. Both wavelengths are emitted from the

same fiber. The fiber is single mode at 1550nm and multi-mode at 980nm. The FSM is used to control the angle at which the beam is transmitted from the telescope aperture.

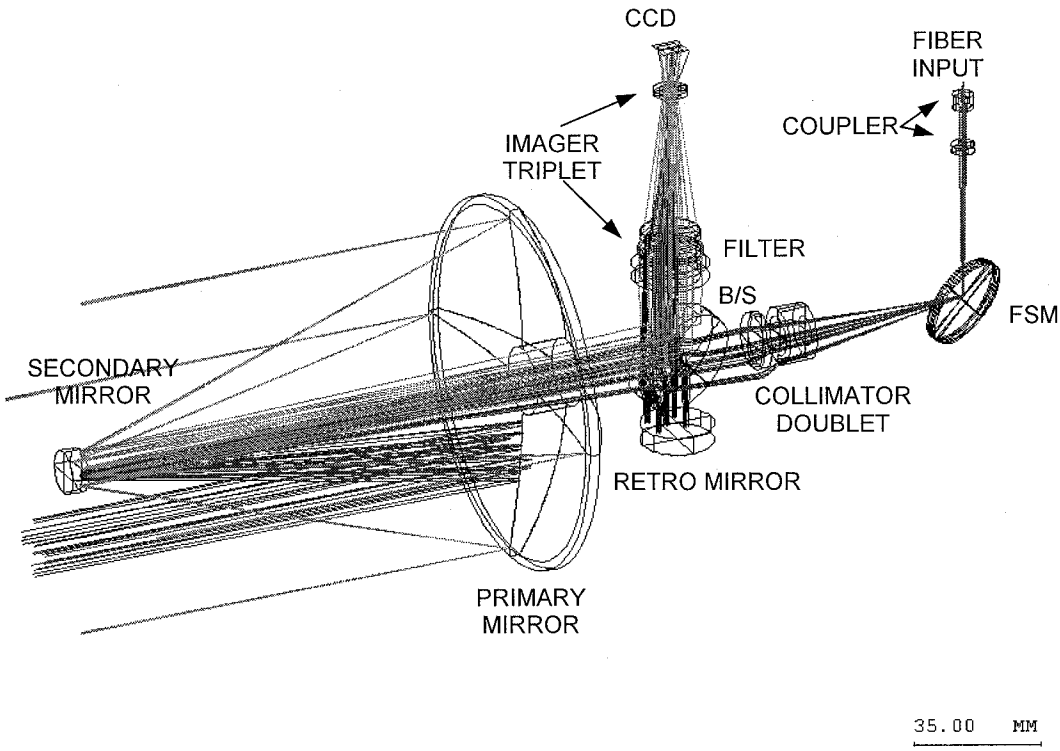

Figure 2 Optical layout of OCD-2.

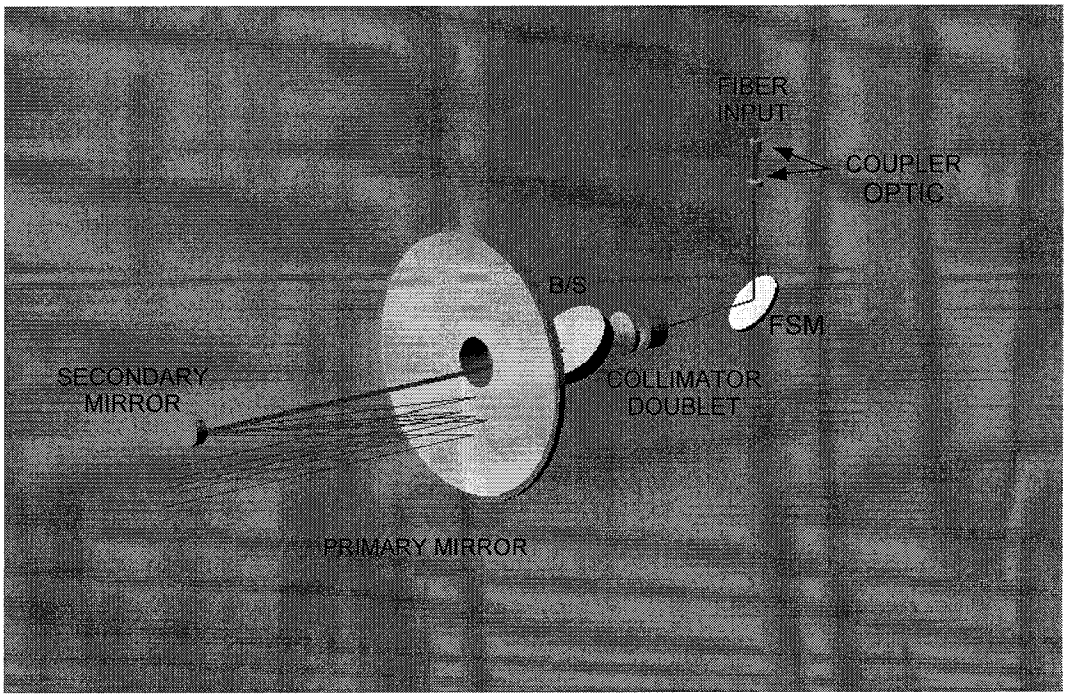

Figure 3 Transmit channel for OCD-2

Table 1A below gives the transmit channel design parameters:

TABLE 1A

PARAMETER	VALUE
Fiber wavelengths (single mode @ 1550nm)	980nm & 1550nm
Fiber N.A.	0.14
Coupler collimator EFL (@ 1550nm)	6.24mm
Coupler collimator lens NA (@ 1550nm)	0.40
Coupler beam diameter ($1/e^2$)	Approx. 1.520mm
Coupler imager EFL	51.613mm
Steering mirror angular magnification	Approx. 13.75x
Collimator doublet EFL	51.026mm
B/S transmit wavelength	1550nm
B/S reflect wavelength	980nm & 810nm
Telescope afocal magnification	10x
Transmit beam size at telescope aperture	Approx. 15.20mm
Transmit beam location in telescope aperture	20.6mm off-center
Transmit beam divergence	200μrad
Conjugate pupil plane locations	Telescope aperture & FSM

Table 1B gives the measured parameters for the transmit channel:

TABLE 1B

Transmit divergence	205 μrad
Coupler optic wavefront (Equiv. @ 1550nm)	1/10 wave
Collimator doublet wavefront (Equiv. @ 1550nm)	1/20 wave
Primary mirror wavefront (Equiv. @ 1550nm)	1/20 wave
Secondary mirror wavefront (Equiv. @ 1550nm)	1/8 wave
FSM voltage to steer beam over the receive FOV	Approx. ±3.25 Volts
FSM voltage for nominal bore sight with receive Ch	< 0.05 Volts
Transmit channel transmittance (1550nm)	63%

It should be noted that the coupler collimator lens is not achromatic which causes the focus to be slightly different for each of the two wavelengths emitted from the fiber. Also, because off-the-shelf optical elements were used for the coupler optical system and the focal lengths available could only be chosen to give a divergence that was close to the desired value, the focus was adjusted slightly to yield the desired divergence at 1550nm. Sub-aperture transmission with a beam diameter of 15.20 mm allows expanding the beam divergence and also affords the flexibility of changing the optics to decrease the beam divergence based upon need. For example, for air-to-air links the beam divergence may be decreased in order to increase the communications range while expending the same power. This is not a simple modification, however since the beam pointing control requirements also become tighter.

3.2 Uplink Beacon Channel

The uplink beacon channel shown in Figure 4 is made up of five optical subsystems as follows:

1) An afocal 2 mirror telescope.
2) A beam splitter.
3) A blocking filter.
4) An imager triplet.
5) A CCD detector.

The uplink beacon radiation is received by the afocal telescope and reduced in size by 10x. The beam is then reflected by the spectral beam splitter towards the blocking filter for rejecting background light. After passing through the blocking filter, the beam is imaged on the CCD detector array by an imager triplet lens assembly. Table 2A and 2B gives the uplink beacon receive channel design and receive parameters. The uplink beacon channel transmittance was difficult to measure accurately because the 810nm source laser was fiber coupled using a multi-mode fiber. The multi-mode fiber caused the power output to vary with time.

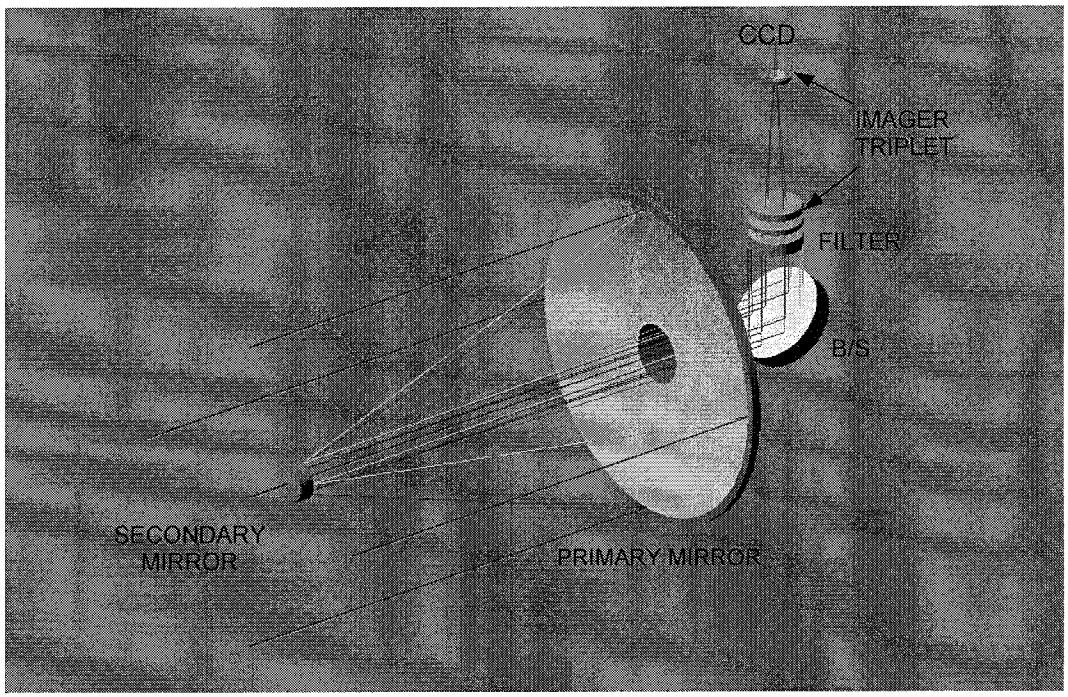

Figure 4 Showing the uplink beacon channel

TABLE 2A

PARAMETER	VALUE
Uplink beacon wavelength	810nm
Telescope aperture size	100mm
Telescope afocal magnification	10x
Internal beam size	10mm
Beam splitter reflect wavelength	810nm
Narrow band pass filter wavelength	810nm
Imager triplet EFL	150mm
Overall receive channel EFL	1500mm
Uplink beacon spot size	30μm
CCD detector array size	658 x 496 pixels
Detector pixel size	7.4μm x 7.4μm
Overall uplink beacon receive EFL	1500mm
Uplink beacon receive focal ratio	f/15.0
Detector FOV	3.25mrad x 2.45mrad

TABLE 2B

Uplink beacon spot size	30μm
Primary mirror wavefront (Equiv. @ 810nm)	1/10 wave
Secondary mirror wavefront (Equiv. @ 810nm)	1/4 wave
Imager triplet assembly wavefront (Equiv @ 810nm)	1/20 wave
Bore sight with Transmit channel (X, Y)	10μrad, 25μrad
Uplink beacon receive channel transmittance	46% to 60%

3.2 Transmit reference channel

The Transmit Reference Channel is made up of eight optical subsystems as follows:

1) An optical fiber coupled to two different laser diodes.
2) A two element fiber coupler optical system.
3) A FSM.
4) A spectral beam splitter.
5) A retro mirror.
6) A blocking filter.
7) An imager triplet lens assembly.
8) A CCD detector array.

From the transmit optical fiber up to the beam splitter; the transmit reference channel is the same as transmit channel. At the beam splitter, approximately 50% of the 980nm radiation is reflected towards a retro mirror. The retro mirror folds the beam back on itself where it then passes through the beam splitter, the narrow band pass filter into the imager triplet lens assembly which images the beam on the receive channel detector CCD array. Table 3A and 3B gives the transmit reference channel design and measured parameters:

TABLE 3A

PARAMETER	VALUE
Fiber wavelengths (multi-mode at 980nm)	980nm & 1550nm
Fiber N.A.	0.14
Coupler collimator EFL (@ 1550nm)	6.24mm
Coupler collimator lens NA (@ 1550nm)	0.40
Coupler beam diameter ($1/e^2$)	Approx. 1.520mm
Coupler imager EFL	51.613mm
Narrow band pass filter wavelength	810nm
Imager triplet EFL	810nm
Reference channel spot size	250μm
CCD detector array size	658 x 496 pixels
Detector pixel size	7.4μm x 7.4μm
Detector FOV	3.25mrad x 2.45mrad

TABLE 3B

Transmit Reference Channel spot size	240μm
Coupler optic wavefront (Equiv. @ 980nm)	1/6 wave
Collimator doublet wavefront (Equiv. @ 980nm)	1/12 wave
Imager triplet assembly (Equiv. @ 980nm)	1/25 wave
Bore sight with the uplink beacon receive channel	10μrad
Bore sight difference between 980nm and 1550nm	Approx. 50μrad

The transmit reference channel spot size is larger than that of the uplink data receive channel because the beam is sub-aperture. The 8-fold larger spot size limits high frame rate centroiding of the reference spot. High bandwidth tracking schemes using two sub-frame centroiding will have to be modified to accommodate the enlarged reference spot size.

All the above wavefront testing was done utilizing a Zygo Mark II interferometer at 632.8nm. Because the OCD-2 operating wavelengths are different than the interferometer wavelength, a conversion was done to determine the equivalent wavefront error at each OCD-2 operating wavelength. The conversion involved taking the difference between the measured and designed performance at 632.8nm and then scaling the difference for the wavelength.

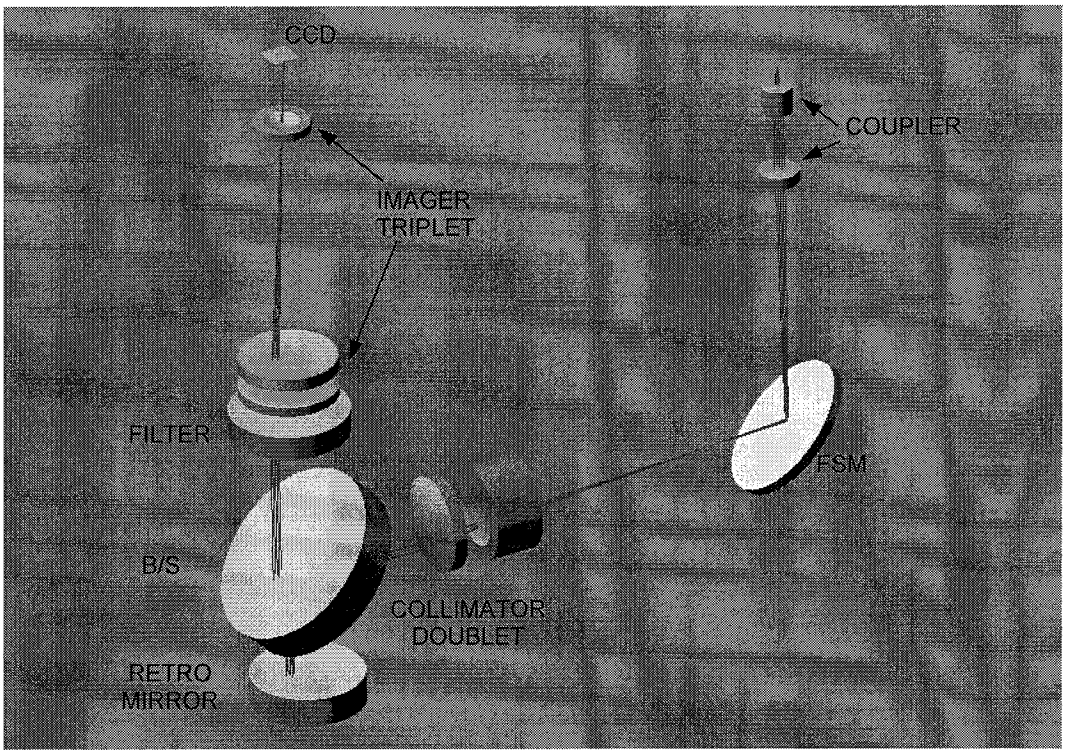

Figure 5 Showing the transmit reference channel.

3.4 Wide field of view camera

The wide field of view Camera is a separate optical system mounted to the side of the main telescope (see figure 6). It consists of the following four optical subsystems:

1) A Protective window.
2) A narrow band pass filter.
3) A refractive camera lens.
4) A CCD detector array.

The wide field of view Camera is a separate optical system mounted to the side of the main telescope housing and is bore sighted with the uplink beacon receive channel. Table 4A and 4B provides design parameters for the wide FOV camera

TABLE 4A

PARAMETER	VALUE
Uplink beacon wavelength	810nm
Refractive lens aperture size	Approx. 4.375mm
Refractive lens EFL	70mm
Narrow band pass filter wavelength	810nm
CCD detector array size	786 x 488 pixels
Detector pixel size	TBD
Detector FOV	Approx. 3° x 3°
Bore sight to Uplink Beacon Receive Channel	TBD

TABLE 4B

Wide Field of View Camera spot size	Approx. 158μm
Bore sight with the uplink beacon receive channel	TBD
Relative response to Uplink Beacon Channel	-1.5db to -2.0db

No wavefront measurements were made with the wide FOV camera because it would have required disassembling an already assembled, certified and focused unit. However, it is believed that the camera focus could be improved. The spot is larger than it should be. When delivered to JPL, the camera may have been focused for the visible and not for 810nm.

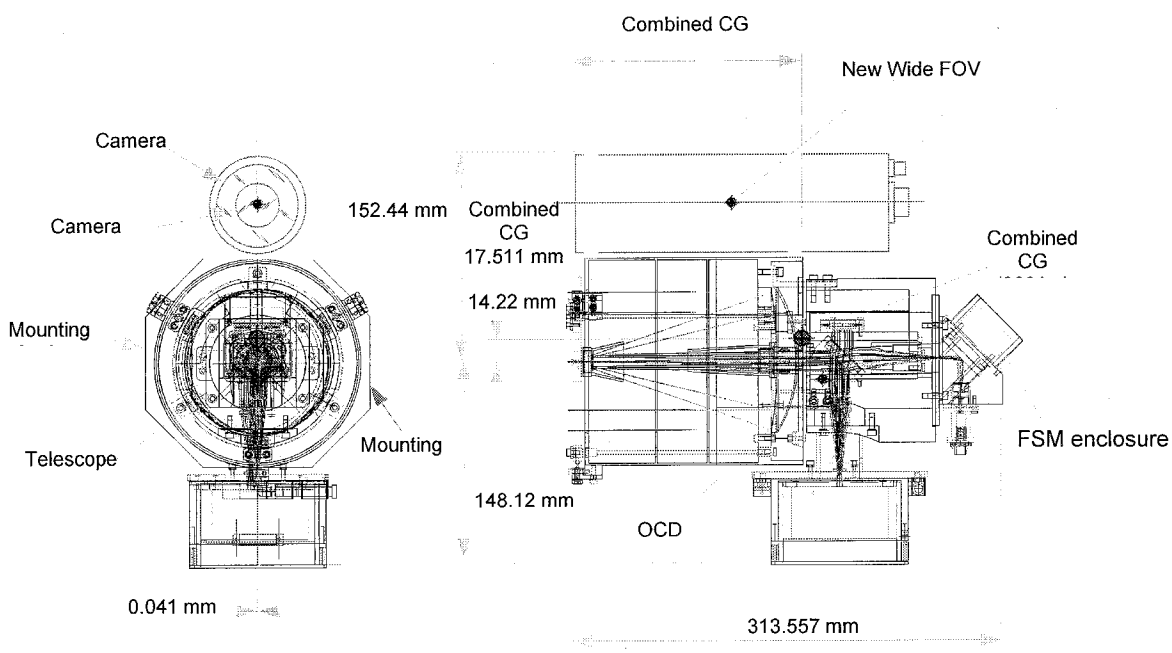

Figure 6 Showing the front and side view of the OCD-2 optical head assembly

Figure 6 shows the OCD-2 optical head assembly while Figure 7 shows a photograph of the front view. The bracket shown in the photograph of Figure 7 is used for interfacing to the gimbal turret assembly. The circular aperture shown above the wide FOV camera is a modulated retro-reflector that was retrofitted to the assembly as a possible aid for beacon acquisition.

4. PERIPHERALS FOR OCD-2 OPTICAL HEAD

In the preceding section details of the optical head of the OCD-2 assembly was described. In order for this optical head to fulfill the requirements as an airborne laser communications terminal it must be integrated to a suitable gimbal turret assembly.

4.1 Gimbal turret assembly

A 20-inch diameter Model-474 gimbal manufactured by the Sonoma Design Group Inc. was selected for housing the OCD-2 optical head. The specified stability performance is ≤5 μrad from a helicopter platform vibration disturbance. The gimbal control loop bandwidth specification is 150 Hz. The gimbal allows a field of regard of +/- 175 degrees. The OCD-2 optical head with all its sensors and electronics has a large number of electrical connections some of which require high bandwidth low noise signal transmission. Routing the large number of electrical cables along with the optical fiber that delivers the laser signal al is an important design issue. Flexible electrical cable is required so that the motion of the optical head in the gimbal is not impeded at the same time the thinner conducting wire must allow reliable solder connections. Proprietary cable supplied by Sonoma Design Inc. was used to meet these requirements. Slip rings were rejected for cable routing and instead a custom twist capsule assembly was designed to provide the flexibility and low torque required for the gimbal to meet its performance specification.

At the time of writing this report all the engineering design and materials procurement for the gimbal were complete. The fabrication of the twist capsule was initiated but testing to validate twist capsule functioning is pending. The integration of the OCD-2 to the gimbal with cable routing will then follow. Finally the mechanical balancing of the payload and shake testing is planned. The expected time to complete this activity is estimated at 3-months.

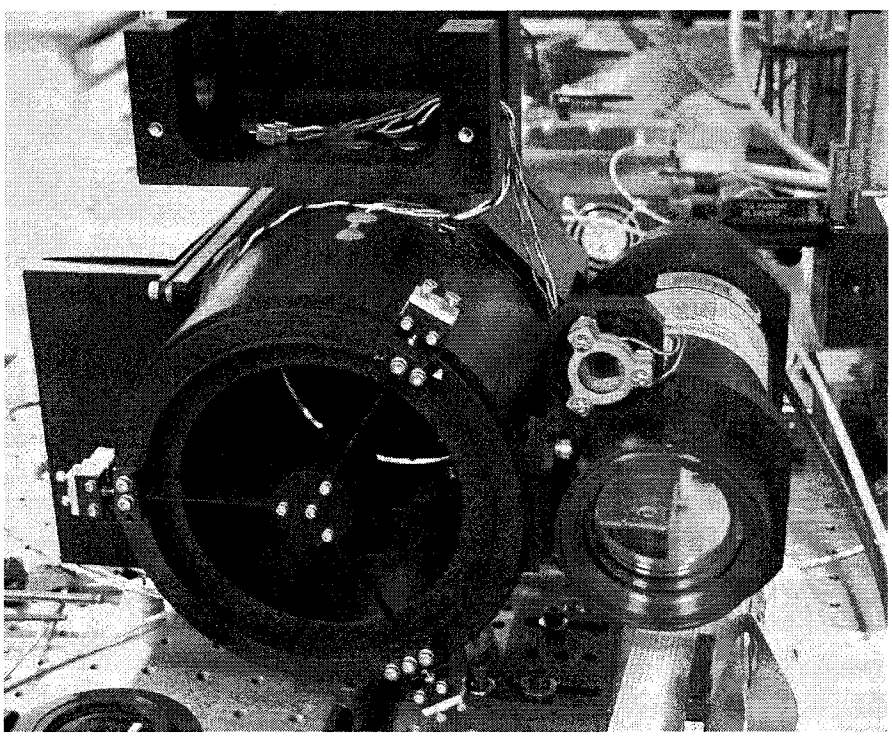

Figure 7 A front view photograph of the OCD-2 optical head assembly with the bracket for interfacing to the gimbal turret assembly

4.2 Electronics Box

Figure 8 shows the electronics box chassis and all the parts that will be assembled inside the chassis. This includes the master 1550-nm laser along with the laser amplifier. The concept being pursued is to design a board on which the master laser and fiber amplifier can be mounted and assembled with the electronics box chassis. The processor board are for command and control, as well as, and status and health monitoring. This includes control of the narrow and wide FOV cameras and the fast steering mirrors. Interface to the aircraft bus for accessing GPS/INS data is also achieved through interfaces to the processor boards. Additionally switching of the laser and selecting data rates to be transmitted are also performed. The data generator can generate up to 2.5 Gbps of pseudo random noise for characterizing link performance. In the current configuration an external interface to a real instrument data source is not included though future upgrades can be undertaken to include this capability.

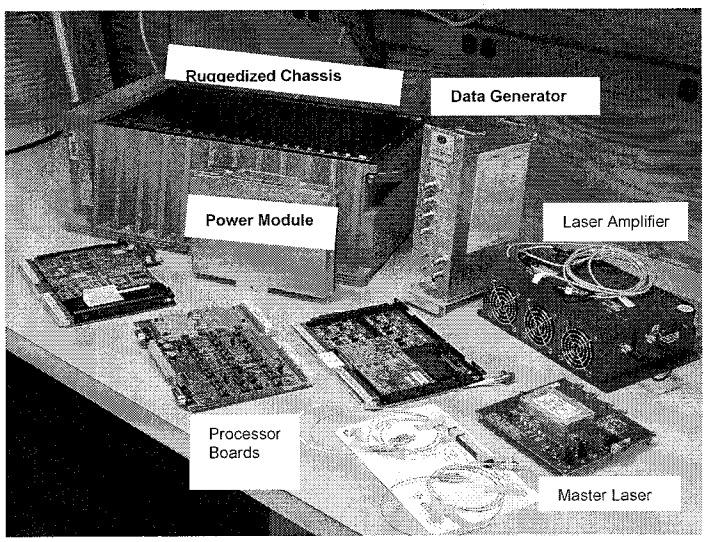

Figure 8 Showing parts of the electronics box and the chassis in which they will be assembled

5. SUMMARY

A progress report on the development of OCD-2 intended as a high data rate optical communications demonstrator from an airborne platform was described. The design, fabrication and testing of the optical head that has been completed is emphasized in this report. The test results reported show that the optical mechanical assembly meets the design objectives with good optical performance. The assembly of the optical head to the gimbal turret assembly is a major part of the overall terminal development and though significant progress in this area has been made the assembly and testing is pending. A noteworthy development in this regard is the custom twist-capsule design that needs to be fabricated and tested to validate the design approach. The electronics box parts are procured and await assembly at the time of writing this report. Finally, though not mentioned previously, software for operating the terminal will largely rely upon existing code that has been tested in laboratory breadboards. However, the end-to-end testing and validation of the software is also pending.

ACKNOWLEDGEMENTS

The Jet Propulsion Laboratory, California Institute of Technology carried out the research described in this paper, under contract with the Missile Defense Agency (MDA) and the Space and Missile Defense Command (SMDC). Distribution A: Approved for Public Release; Distribution is unlimited.

REFERENCES

1. G. G. Ortiz, S. Lee, S. Monacos, M. W. Wright, A. Biswas, "Design and development of a robust ATP subsystem for the Altair UAV-to-Ground Lasercom 2.5 Gbps Demonstration, " Proceedings of SPIE, Free-Space Laser Communications Technologies XV, [Ed. G. Stephan Mecherle], 4975, 130, 2003.
2. J. Lesh, C.-C. Chen and H. Ansari, "Lasercom system architecture with reduced complexity, "US Patent Number 5517016, May 1996.
3. M. Jeganathan, A. Portillo, C. Racho, S. Le, D. Erickson, J. Depew, S. Monacos and A. Biswas, "Lessons Learnt from the Optical Communications Demonstrator (OCD), " Proceedings of SPIE, Free-Space Laser Communications Technologies XI, [Ed. G. Stephan Mecherle], 3615, 23, 1999.
4. A. Biswas, M. W. Wright, B. Sanii, N. Page, "45-Km horizontal path optical link demonstration, " Proceedings of SPIE, Free-Space Laser Communications Technologies XIII, [Ed. G. Stephan Mecherle], 4272, 60, 2001.