Phase-Noise and Amplitude-Noise Measurement of Low-Power Signals

Enrico Rubiola
ESSTIN and LPMIA, Université Henri Poincaré, Nancy, France

Ertan Salik, Nan Yu, and Lute Maleki
Jet Propulsion Laboratory, California Institute of Technology, Pasadena, CA, USA

Abstract

Measuring the phase fluctuation between a pair of low-power microwave signals, the signals must be amplified before detection. In such cases the phase noise of the amplifier pair is the main cause of $1/f$ background noise of the instrument. This article proposes a scheme that makes amplification possible while rejecting the close-in $1/f$ (flicker) noise of the two amplifiers. Noise rejection, which relies upon the understanding of the amplifier noise mechanism, does not require averaging. Therefore, our scheme can also be the detector of a closed-loop noise reduction system. The first prototype, compared to a traditional saturated mixer system under the same conditions, shows a 24 dB noise reduction in the $1/f$ region.

1 Introduction

Phase noise is conventionally described in terms of the power spectral density $S_\varphi(f)$, which refers to the representation $v(t) = V_0[1 + \alpha(t)] \cos[\omega_0 t + \varphi(t)]$. $\varphi(t)$ and $\alpha(t)$ are the phase and amplitude fluctuations, $\omega_0 = 2\pi\nu_0$ is the carrier angular frequency, and f is the Fourier frequency. It is a common practice to measure $\varphi(t)$ with a double-balanced Schottky-diode mixer as the phase-to-voltage converter, comparing the signal to a reference. Yet, the mixer needs power to saturate, and amplification becomes necessary if the signals are smaller than 0–5 dBm. In the case of signals distributed over optical fibers, for example, the output power of a photodetector can be -20 dBm or less, requiring further amplification before they are fed to the mixer. The quartz resonator, which has a typical dissipated power of -20 dBm, is second example of low-power application. A further example is the whispering gallery resonator, that can be used at a power as low as -50 dBm when the medium-term stability (10^3 s) is relevant. Of course amplifiers flicker, which turns out to be the main measurement limit at low f. This limit is even more severe if both the signal and the reference must be amplified. We observed that the $1/f$ noise of *both amplifiers* can be eliminated using an interferometric (bridge) scheme instead of the saturated mixer. In pragmatic terms the block diagram changes very little: a hybrid junction, which generates the sum and the difference of the two input signals, is inserted between the sources and the amplifier pair.

Before getting into technical topics, we wish to make clear that our approach is only effective with flicker because it exploits the parametric origin of this type of noise. Accepting this limitation, this article analyzes only the flicker noise.

2 Flicker noise in amplifiers

Understanding the close-in flicker noise in microwave and RF amplifiers starts from the simple observation that the output spectrum is of the white type—flat in a wide frequency range—when the carrier power is zero, and that the close-in noise becomes visible when a sufficiently large carrier signal is present at the amplifier output (Fig. 1). Observing with a spectrum analyzer the output an amplifier input terminated to a resitor, there is no reason for close-in excess noise to appear, around any frequency. The obvious consequence is that the close-in flicker noise results from a parametric effect by which some near-dc flicker phenomena modulate the carrier in amplitude and phase.

The simplest model for the noise up-conversion is a nonlinear transfer function truncated to the 2nd order

$$v_o(t) = a_1 v_i(t) + a_2 v_i^2(t) + \dots , \qquad (1)$$

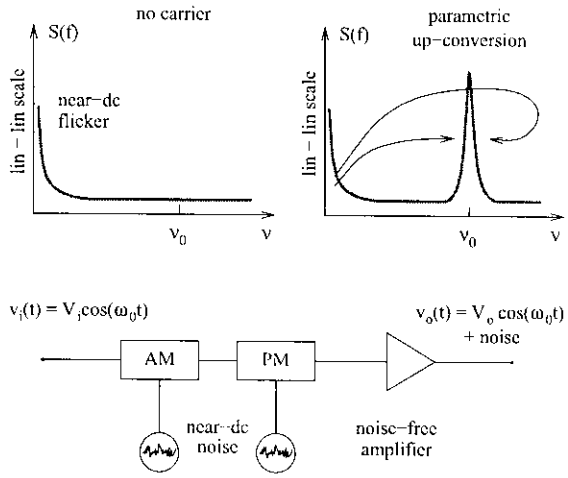

Figure 1: Parametric up-conversion of near-dc noise is the mechanism responsible for the close-in noise in RF and microwave amplifiers.

in which the analytic input signal

$$v_i(t) = V_{i\,\mathrm{rms}}\, e^{j\omega_0 t} + n'(t) + jn''(t) \qquad (2)$$

contains the carrier and the internally generated near-dc noise. The latter is written as $n(t) = n'(t) + jn''(t)$, where the real part $n'(t)$ modulates the amplitude, and the imaginary part $jn''(t)$ modulates the phase. Rather than being easy-to-identify voltages or currents, $n'(t)$ and $n''(t)$ are abstract random signals that also accounts for the efficiency of the modulation process. Combining (1) and (2) and selecting the terms close to the carrier frequency ω_0, we get

$$v_o(t) = V_{i\,\mathrm{rms}}\left[a_1 e^{j\omega_0 t} + 2a_2 e^{j\omega_0 t} n'(t) + \right. \\ \left. + j2a_2 e^{j\omega_0 t} n''(t)\right] \ . \qquad (3)$$

For the purpose of this article it is convenient to rewrite the analytic output signal (3) as the *real* signal

$$v_o(t) = V_o\left[\cos\omega_0 t + mn'(t)\cos\omega_0 t - mn''(t)\sin\omega_0 t\right] \\ = V_o\left[\cos\omega_0 t + \alpha_n(t)\cos\omega_0 t - \varphi_n(t)\sin\omega_0 t\right] \quad (4)$$

with $\alpha_n(t) = mn'(t)$, $\varphi_n(t) = mn''(t)$, and $m' = m'' = m = 2a_2/a_1$. Referring to a specific amplifier (Figures 2 and 3), the subscript n will be replaced with a or b. The peak amplitude V_o is used instead of the rms amplitude.

Deriving (4), the statistical properties of $n'(t)$ and $n''(t)$ are not affected by the carrier power. This accounts for the experimental observation that the amplifier phase noise given in rad^2/Hz is about independent of power in a wide range [1, 2, 3]. Of course, some dependence on power remains. We ascribe it to higher order (> 2) terms of (1), and to the change of dc bias

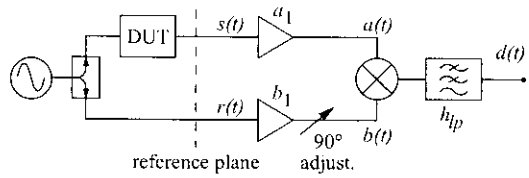

Figure 2: Scheme of the saturated-mixer instrument for the measurement of phase noise, adapted to low-power signals.

occurring in large signal regime, which in turns affects the near-dc noise.

In summary, we use Eq. (4) with the statistical properties of $n'(t)$ and $n''(t)$ independent of the signal as the model of the amplifier noise. With commercial microwave amplifiers, the flicker noise ends up to be of -100 to 110 dBrad^2/Hz at $f = 1$ Hz off the carrier.

3 Saturated-mixer as the phase detector

The saturated-mixer for the measurement of low-power signals scheme is shown in Fig. 2. The left-hand part of the figure can take different forms, depending on the device under test. For example, there can be two devices under test (DUT), one in each arm, or two detectors converting some signal into a microwave carrier. We focus our attention on the phase noise measurement of the two signals $r(t)$ and $s(t)$. We assume that they are of equal power, and that the two amplifiers are equal and independent. In addition, the amplifier gain ($a_1 = b_1$) is such that the two mixer inputs are properly saturated (≈ 10 dBm in most cases). Setting the phase shifter for $a(t)$ and $b(t)$ to be in quadrature, the detected output signal is

$$d(t) = k_\varphi \varphi(t) \qquad (5)$$

where the gain k_φ is of the order of 200–300 mV/rad for most Schottky-diode double-balanced mixers. For a number of technical reasons, up to some 40 GHz only this type of mixer is used in practice.

The background noise of the instrument, in the absence of the DUT, is

$$S_\varphi(f) = S_{\varphi\,a}(f) + S_{\varphi\,b}(f) + S_{\varphi\,\mathrm{mixer}}(f) \ . \qquad (6)$$

Low-noise microwave mixers are available, for which the 1-Hz flicker is significantly lower than -120 dBrad^2/Hz, for the mixer noise turns out to be negligible as compared to the noise of the two amplifiers. According to the flicker noise model of Sec. 2, we expect a background flicker twice the noise of one amplifier, and independent of the signal power.

The signal-to-noise ratio is defined as the ratio of the power of the useful signal, i.e., the DUT noise $\overline{\varphi_d^2}$, divided by the power of the background noise, $\overline{\varphi_a^2} + \overline{\varphi_b^2}$. This can be written in terms of power spectrum densities as

$$\mathrm{SNR} = \frac{S_{\varphi\,d}(f)}{S_{\varphi\,a}(f) + S_{\varphi\,b}(f)} \ . \tag{7}$$

The reader should not take the above conclusion too literally because the mixers are sensitive to amplitude noise through a power-to-dc-offset conversion mechanism [4]. It is therefore possible that the contamination from amplitude noise exceeds the amplifier flicker, although it hardly happens in the everyday experience. On the other hand, the AM noise contamination is one of the major sensitivity limitations when correlation is used to reduce the noise of a saturated-mixer system.

4 Interferometer

The scheme of the interferometric noise measurement system adapted to the measurement of low-power signals is shown in Fig. 3. As with the saturated mixer, the left-hand part of the figure can take different forms not discussed here. The general theory, the design guidelines and the experimental aspects of this type of instrument are extensively discussed in Ref. [5]. The analysis provided in this Section is therefore limited to the effect of the amplifier flickering on the instrument background noise.

The variable attenuation and phase shift are set equal to the DUT, for the carrier is suppressed at the Δ port of the hybrid junction. All the carrier power goes to the Σ port and, after amplification, pumps the mixer. The DUT noise sidebands, not affected by the carrier suppression mechanism, are present at the output of the hybrid, half power at each port. The DUT noise present at the Δ port is amplified and synchronously converted to dc.

Let

$$s(t) = V_0\big[\cos\omega_0 t + \alpha_d(t)\cos\omega_0 t - \varphi_d(t)\sin\omega_0 t\big] \tag{8}$$

$$r(t) = V_0\big[\cos\omega_0 t + \varepsilon\cos(\omega_0 t + \vartheta)\big] \tag{9}$$

the signals at the input of the hybrid junction. The subscript d stands for DUT. The term $\varepsilon\cos(\omega_0 t + \vartheta)$ accounts for imperfect matching of the r and s arms, hence for the residual carrier at the Δ port. The amplitude ε and the phase ϑ are the random outcome of the adjustment. We assume the residual carrier is small ($0 < \varepsilon \ll 1$) and has random phase ($0 \le \vartheta < 2\pi$), and that it is constant during the measurement. The signals at the hybrid output are

$$v_\Delta(t) = \tfrac{1}{\sqrt{2}}\big[s(t) - r(t)\big] \tag{10}$$

$$v_\Sigma(t) = \tfrac{1}{\sqrt{2}}\big[s(t) + r(t)\big] \tag{11}$$

The factor $1/\sqrt{2}$ is due to energy conservation. The detected signal can be calculated with negligible error taking $\varepsilon = 0$, which means that the carrier is perfectly suppressed. Taking provisionally noise-free amplifiers, the mixer input signals are[1]

$$a(t) = \frac{a_1 V_0}{\sqrt{2}}\Big[\alpha_d\cos\omega_0 t - \varphi_d\sin\omega_0 t + \\ - \varepsilon\cos(\omega_0 t + \vartheta)\Big] \tag{12}$$

$$b_i(t) = \frac{b_1 V_0}{\sqrt{2}}\Big[2\cos\omega_0 t + \alpha_d\cos\omega_0 t + \\ - \varphi_d\sin\omega_0 t + \varepsilon\cos(\omega_0 t + \vartheta)\Big] \quad \text{for } \gamma = 0 \tag{13}$$

$$b_q(t) = \frac{b_1 V_0}{\sqrt{2}}\Big[-2\sin\omega_0 t - \alpha_d\sin\omega_0 t + \\ - \varphi_d\cos\omega_0 t - \varepsilon\sin(\omega_0 t + \vartheta)\Big] \quad \text{for } \gamma = \pi/2 \tag{14}$$

The local oscillator (LO) signal [$b(t)$ in Fig. 3], also referred as pump signal, can be either $b_i(t)$ or $b_q(t)$ depending on the choice of γ. The system detects the *in*-phase (AM) noise if $\gamma = 0$, and detects and the *q*uadrature (PM) noise if $\gamma = \pi/2$ (90°).

Taking provisionally a perfect multiplier as the mixer, the detected signal is

$$d(t) = U\,[a(t)\,b(t)] * h_{lp}(t) \ . \tag{15}$$

The trivial factor $U = 1\ \mathrm{V}^{-1}$ is introduced for the result to have the physical dimension of a voltage. The convolution with the low-pass function $h_{lp}(t)$ filters out the $2\omega_0$ products, and takes in only the near-dc terms. In this case, the effect of "$* h_{lp}(t)$" is to replace $\sin^2(\cdot) \to 1/2$, $\cos^2(\cdot) \to 1/2$, and $\sin(\cdot)\cos(\cdot) \to 0$.

All actual implementations of Fig. 3 make use of Schottky-diode double-balanced mixers, for a number of technical reasons. These mixers need that the LO input is saturated with the appropriate power, which is of the order of +10 dBm. As a consequence, the peak amplitude with which we calculate the detected signal is the saturated value V_L instead of the value $2b_1V_0/\sqrt{2}$ that appears in Eq. (13)-(14). Of course, $V_L < 2b_1V_0/\sqrt{2}$. The saturated value V_L can be calculated by equating the output signal that results from

[1] Hereinafter we write α and φ instead of $\alpha(t)$ and $\varphi(t)$, letting the dependence on t implied.

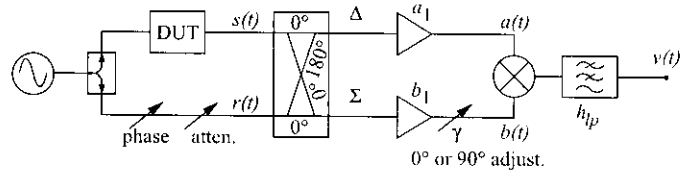

Figure 3: Scheme of the interferometric instrument for the measurement of amplitude noise and phase noise, adapted to low-power signals.

the mixer SSB voltage[2] loss ℓ to the signal obtained from a perfect multiplier. There results $V_L = \frac{2}{U\ell}$. The loss of actual mixer is of about 2 (6 dB), hence $V_L \approx 1$ V. Under this hypothesis, and neglecting the effect of he residual carrier, the saturated LO signals are

$$b_i^*(t) = \frac{2}{U\ell}\Big[\cos\omega_0 t + \tfrac{1}{2}\varrho\alpha_d \cos\omega_0 t - \tfrac{1}{2}\varphi_d \sin\omega_0 t\Big] \tag{16}$$

$$b_q^*(t) = \frac{2}{U\ell}\Big[-\sin\omega_0 t - \tfrac{1}{2}\varrho\alpha_d \sin\omega_0 t - \tfrac{1}{2}\varphi_d \cos\omega_0 t\Big] \ . \tag{17}$$

Here the superscript '$*$' stands for 'saturated'. Satutation is soft. As a consequence, the fractional amplitude $\alpha(t)$ is attenuatd by a factor $\varrho < 1$, without destroying the information. The phase information is not affected.

4.1 Detection of the DUT noise

The detected output signal is found by multiplying the $a(t)$ signal (12) by the saturated pump (16)-(17), and by selecting the near-dc terms. Discarding the second-order products, we obtain

$$d_i(t) = \frac{a_1 V_0}{\sqrt{2}\ell}\,\alpha_d(t) \qquad \text{for } \gamma = 0 \tag{18}$$

$$d_q(t) = \frac{a_1 V_0}{\sqrt{2}\ell}\,\varphi_d(t) \qquad \text{for } \gamma = \pi/2 \ . \tag{19}$$

In the laboratory practice it is often convenient to refer to the fractional-amplitude-to-voltage gain $k_\alpha(t) = d_i(t)/\alpha_d(t)$ and to the phase-to-voltage gain $k_\varphi = d_q(t)/\varphi_d(t)$ of the instrument. In addition, it is convenient to replace the peak voltage V_0 at the DUT output according to $V_0 = \sqrt{2R_0P_0}$, where R_0 is the characteristic impedance (50 Ω) and P_0 is the power. Hence

$$k_\alpha = \frac{a_1\sqrt{R_0P_0}}{\ell} \qquad \text{and} \qquad k_\varphi = \frac{a_1\sqrt{R_0P_0}}{\ell} \tag{20}$$

[2]In earlier articles we used ℓ_m for the mixer *power* loss. Afterwardswe opted for ℓ as the *voltage* loss because it slightly simplifies the notation. In practice, there is no risk of confusion because the mixer loss is always given in dB.

4.2 Background noise

In order to calculate the residual noise of the instrument we drop the DUT noise [$\alpha_d(t) = 0$, and $\varphi_d(t) = 0$], and we reintroduce the residual carrier ($\varepsilon \neq 0$). Hence

$$v_\Delta(t) = \frac{V_0}{\sqrt{2}}\Big[-\varepsilon\cos(\omega_0 t + \vartheta)\Big] \tag{21}$$

$$v_\Sigma(t) = \frac{V_0}{\sqrt{2}}\Big[2\cos\omega_0 t + \varepsilon\cos(\omega_0 t + \vartheta)\Big] \ . \tag{22}$$

In the amplification process we include the noise model of Section 2, and soft saturation at the mixer LO port. Thus

$$a(t) = \varepsilon\frac{a_1 V_0}{\sqrt{2}}\Big[-\cos(\omega_0 t + \vartheta) - \alpha_a\cos(\omega_0 t + \vartheta) + \\ + \varphi_a\cos(\omega_0 t + \vartheta)\Big] \tag{23}$$

$$b_i^*(t) = \frac{2}{U\ell}\Big[\cos\omega_0 t + \varrho\alpha_b\cos\omega_0 t - \varphi_b\sin\omega_0 t\Big] \tag{24}$$

$$b_q^*(t) = \frac{2}{U\ell}\Big[-\sin\omega_0 t - \varrho\alpha_b\sin\omega_0 t - \varphi_b\cos\omega_0 t\Big] \ . \tag{25}$$

Writing Eq. (24) and (25) from (22), we neglect the term $\varepsilon\cos(\omega_0 t + \vartheta)$ because $\varepsilon \ll 1$. Expanding the detected signal $d(t) = [a(t)\,b^*(t)] * h_{lp}(t)$, we get 9 cross terms. We simplify the calculus by observing that the cross terms $\alpha\varphi$, $\alpha\varepsilon$ and $\varphi\varepsilon$ are negligible as compared to the terms α and φ. Thus we split the calculus as

$$d(t) = U\big[a(t)\,b^*(t)\big]_{\substack{\text{a noisy}\\ \text{b ideal}}} * h_{lp}(t) + \\ + U\big[a(t)\,b^*(t)\big]_{\substack{\text{a ideal}\\ \text{b noisy}}} * h_{lp}(t) \tag{26}$$

When the Δ amplifier flickers and the Σ amplifier is flicker free, the signals (23), (24) and (25) can be approximated as

$$a(t) = \varepsilon\frac{a_1 V_0}{\sqrt{2}}\Big[-\cos(\omega_0 t + \vartheta) - \alpha_a\cos(\omega_0 t + \vartheta) + \\ + \varphi_a\cos(\omega_0 t + \vartheta)\Big] \tag{27}$$

$$b_i^*(t) = \frac{2}{U\ell}\cos\omega_0 t \tag{28}$$

$$b_q^*(t) = -\frac{2}{U\ell}\sin\omega_0 t \ , \tag{29}$$

thus

$$d_i(t) = -\varepsilon \frac{a_1 V_0}{\sqrt{2}\ell} \Big[\alpha_a \cos\vartheta - \varphi_a \sin\vartheta \Big] \tag{30}$$

$$d_q(t) = -\varepsilon \frac{a_1 V_0}{\sqrt{2}\ell} \Big[\alpha_a \sin\vartheta + \varphi_a \cos\vartheta \Big] \ . \tag{31}$$

Similarly, when the Δ amplifier is flicker free and the Σ amplifier flickers, it holds the approximation

$$a(t) = \varepsilon \frac{a_1 V_0}{\sqrt{2}} \Big[-\cos(\omega_0 t + \vartheta) \Big] \tag{32}$$

$$b_i^*(t) = \frac{2}{U\ell} \Big[\cos\omega_0 t + \varrho\alpha_b \cos\omega_0 t - \varphi_b \sin\omega_0 t \Big] \tag{33}$$

$$b_q^*(t) = \frac{2}{U\ell} \Big[-\sin\omega_0 t - \varrho\alpha_b \sin\omega_0 t - \varphi_b \cos\omega_0 t \Big] \ , \tag{34}$$

hence

$$d_i(t) = -\varepsilon \frac{a_1 V_0}{\sqrt{2}\ell} \Big[\varrho\alpha_b \cos\vartheta + \varphi_b \sin\vartheta \Big] \tag{35}$$

$$d_q(t) = -\varepsilon \frac{a_1 V_0}{\sqrt{2}\ell} \Big[\varrho\alpha_b \sin\vartheta - \varphi_b \cos\vartheta \Big] \ . \tag{36}$$

Joining the above results, (30)+(35) for AM noise and (31)+(36) for PM noise, we get the detected background noise

$$d_i(t) = -\varepsilon \frac{a_1 V_0}{\sqrt{2}\ell} \Big\{ \big[\alpha_a + \varrho\alpha_b \big] \cos\vartheta + \\ - \big[\varphi_a - \varphi_b \big] \sin\vartheta \Big\} \tag{37}$$

$$d_q(t) = -\varepsilon \frac{a_1 V_0}{\sqrt{2}\ell} \Big\{ \big[\alpha_a + \varrho\alpha_b \big] \sin\vartheta + \\ + \big[\varphi_a - \varphi_b \big] \cos\vartheta \Big\} \ . \tag{38}$$

The signal-to-noise ratio can be derived by dividing the detected DUT signal [Eq. (18) and (19)] by the detected background noise [Eq. (37) and (38)]. Turning voltages into spectra, there results

$$\mathrm{SNR}_\alpha = \frac{S_{\alpha d}}{\varepsilon^2 \Big\{ \big[S_{\alpha a} + \varrho^2 S_{\alpha b} \big] \cos^2\vartheta + \big[S_{\varphi a} + S_{\varphi b} \big] \sin^2\vartheta \Big\}} \tag{39}$$

$$\mathrm{SNR}_\varphi = \frac{S_{\varphi d}}{\varepsilon^2 \Big\{ \big[S_{\alpha a} + \varrho^2 S_{\alpha b} \big] \sin^2\vartheta + \big[S_{\varphi a} + S_{\varphi b} \big] \cos^2\vartheta \Big\}} \ . \tag{40}$$

Besides some algebra, the physical interpretation for the flicker noise reduction is simple.

Δ amplifier. The flicker noise sidebands of the Δ amplifier are kept low by carefully suppressing the carrier at the amplifier input. This approaches the condition in which no carrier is present at the amplifier ends, for the noise spectrum is white, flat in a wide frequency range.

Σ amplifier. The Σ amplifier flickers, which is inevitable because this amplifier serves to saturate the mixer LO input. Yet the noise detection requires a "pump" signal at the other input of the mixer. This signal is attenuated by a factor ε.

Eq. (39) and (40) are close the noise reduction calculated in our previous article [6], derived with a simpler analysis. At a closer look, the saturated internal LO signal contains harmonics at angular frequencies multiple of ω_0. Accordingly, additional noise present in the corresponding parts of the spectrum is taken in by the synchronous detection process. We have no information about additional flickering, if any, taken in in this way. Even in the absence of additional noise from harmonics, the full benefit of (39) and (40) can not be achieved in practice because another phenomenon, described in Section 5, introduce additional noise.

5 The effect of the dc offset

The mixer output shows a dc offset V_{os} that derives from the asymmetry of the internal diode ring, and from the asymmetry of the internal baluns that split the LO power among the diodes. Unfortunately, this offset is sensitive to the LO power according to

$$V_{os} = k_p \frac{\Delta V_{LO}}{V_{LO}} \ , \tag{41}$$

where

$$k_p = \frac{dV_{os}}{d\left(\frac{\Delta V_{LO}}{V_{LO}}\right)} \tag{42}$$

is the offset sensitivity to the fluctuation of the LO fractional amplitude, and V_{LO} is the voltage feed into the LO port of the mixer [$2b_1 V_0/\sqrt{2}$ in Eq. (13)-(14)]. The relevant consequence is that a random amplitude fluctuation of the LO signal—i.e., the AM noise of the Σ amplifier—turns into detected noise.

No data about k_p were found in the literature. Some measurements carried on at the FEMTO-ST (formerly LPMO), Besançon, France, suggest a value of 10 mV for some microwave mixers.

Letting the pump signal fed into the mixer

$$b(t) = V_{LO} \Big[\cos\omega_0 t + \alpha_b \cos\omega_0 t - \varphi_b \cos\omega_0 t \Big] \ , \tag{24}$$

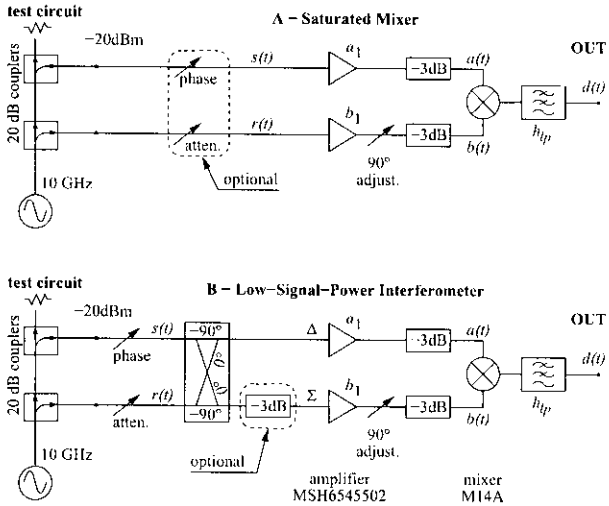

Figure 4: Experimental configuration used to compare the saturated mixer and the interferometer in the closest possible conditions.

the detected background noise is

$$d(t) = k_b \alpha_b(t) \ . \tag{43}$$

There results a signal-to-noise ratio

$$\mathrm{SNR}_\alpha = \frac{\dfrac{a_1^2 V_0^2}{2\ell^2} S_{\alpha\, d}(f)}{k_b^2 S_{\alpha\, b}(f)} \tag{44}$$

and

$$\mathrm{SNR}_\varphi = \frac{\dfrac{a_1^2 V_0^2}{2\ell^2} S_{\varphi\, d}(f)}{k_b^2 S_{\alpha\, b}(f)} \ . \tag{45}$$

We wish to stress that this noise mechanism has nothing to do with the detection of the amplifier noise analyzed in Section 4.2. The mechanism described here is effective even if the Δ amplifier is removed and the mixer input is terminated (of course, in this extreme condition the system is no longer able to detect the DUT noise). The overall SNR is found by adding the noise of Eq. (39)-(40) to that of Eq. (44)-(45).

The noise originated from the offset sensitivity to power has the following annoying properties.

1. Improving the carrier suppression is not beneficial. This is because the residual carrier in the $a(t)$ signal does not enter in the equations.

2. A "sweet point" in which the sensitivity to AM noise vanishes—as suggested by Brendel [4] for the phase detectors—does not exist. This method requires that the two inputs of the mixer are saturated, as in the traditional scheme (Fig. 2), for a phase shift to be effective.

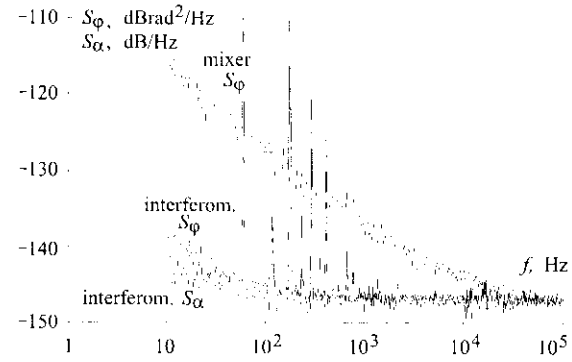

Figure 5: Background noise, measured in the absence of the DUT.

3. The background noise spectrum at the dc output is independent of the DUT power P_0, while the instrument gain [Eq. (20)] is proportional to P_0. Hence the SNR becomes lower at lower power.

4. The AM noise of the main source is taken in with the same mechanism. This is seen by inspection on Fig. 3.

6 Comparison between the two schemes

We compare the two configurations of Fig. 4, saturated mixer and interferometer, under the closest possible conditions. For this reason the variable phase shifter and the variable attenuator labelled 'optional' are kept in Fig. 4A, and the 'optional' 3 dB attenuator is inserted in Fig. 4B. The instrument is driven by two signals of frequency $\omega_0/2\pi = 9.9$ GHz and of power of $P_0 = -20$ dBm obtained from a common synthesizer and directional couplers. The couplers are virtually noise free, hence the measured noise is the residual noise of the instrument. The amplifiers each produce 32 dB of gain with a 3 dB output attenuator that improves impedance matching and protects the mixer, and have a noise figure of 3 dB. The interferometer is adjusted for a carrier suppression of 60 dB or better ($\varepsilon < 10^{-3}$).

The background noise is shown in Fig. 5. The white noise is -147 dBrad^2/Hz. This is due to the additive white noise of the amplifier, which is the same for the two configurations. The saturated-mixer scheme shows a residual flicker of -106 dBrad^2/Hz at $f = 1$ Hz (extrapolated), which is consistent with the $1/f$ noise of the amplifiers. The amplitude noise of the interferometer, hardly visible, is of some -135 dB/Hz at $f = 1$ Hz. The phase noise is -130 dBrad^2/Hz at $f = 1$ Hz (extrapolated), which improves by 24 dB as compared with the saturated mixer scheme. As expected, the full benefit of a factor $4\varepsilon^2$ could not be obtained.

Unfortunately, at the time of the experiments reported we did not measure the dc sensitivity k_b of the mixer and the amplitude noise. We understood the phenomenon of the contamination from AM afterwards, picking up data from other experiments. Nonetheless, we can give a picture of the reality. Some relevant parametes of the described experiment are $P_0 = -20$ dBm, $a_1 = 32$ dB, $\ell = 6$ dB, and $R_0 = 50\ \Omega$. Accordingly, the phase-to-voltage gain is of -8 dBV/rad, including 1 dB dissipative loss from the DUT to the amplifier. Let us assume $S_{\alpha b} = -105$ dBHz^{-1} at 1 Hz (a little worse than phase noise, because the synthesizer also contributes) and $k_b = -35$ dBV as plausible values. There results an output voltage spectrum $S_d = -140$ dBV^2/Hz at $f = 1$ Hz, therefore a background noise $S_\alpha = -132$ dBHz^{-1}, or $S_\varphi = -132$ dBrad^2/Hz. These values are close to those observed in Fig. 5.

Acknowledgments The research described in this paper was carried out at the Jet Propulsion Laboratory, California Institute of Technology, under contract of the National Aeronautics and Space Administration. We thanks the Université Henri Poincaré for partially supporting ER while visiting the JPL, and the FEMTO-ST (formerly LPMO), Besançon, France, for data on AM noise.

References

[1] D. Halford, A. E. Wainwright, and J. A. Barnes, "Flicker noise of phase in RF amplifiers: Characterization, cause, and cure," in *Proc. Freq. Control Symp.*, pp. 340–341, Apr. 22 24, 1968. Abstract only is published.

[2] F. L. Walls, E. S. Ferre-Pikal, and S. R. Jefferts, "Origin of $1/f$ PM and AM noise in bipolar junction transistor amplifiers," *IEEE Trans. Ultras. Ferroel. and Freq. Contr.*, vol. 44, pp. 326–334, Mar. 1997.

[3] A. Hati, D. Howe, D. Walker, and F. Walls, "Noise figure vs. PM noise measurements: A study at microwave frequencies," in *Proc. Europ. Freq. Time Forum and Freq. Control Symp. Joint Meeting*, May 5–8, 2003.

[4] R. Brendel, G. Marianneau, and J. Ubersfeld, "Phase and amplitude modulation effects in a phase detector using an incorrectly balanced mixer," *IEEE Trans. Instrum. Meas.*, vol. 26, pp. 98–102, June 1977.

[5] E. Rubiola and V. Giordano, "Advanced interferometric phase and amplitude noise measurements," *Rev. Sci. Instrum.*, vol. 73, pp. 2445–2457, June 2002.

[6] E. Rubiola, E. Salik, N. Yu, and L. Maleki, "Phase noise measurement of low power signals," *Electron. Lett.*, vol. 39, pp. 1389–1390, sep 18, 2003.