The Road to Launch and Operations of the Spitzer Space Telescope

Author: Robert K. Wilson

Tracking No: 55902

The Road to Launch and Operations of the Spitzer Space Telescope

Robert K. Wilson* and Charles P. Scott†
Jet Propulsion Laboratory, California Institute of Technology, Pasadena, California, 91109

Abstract

Spitzer Space Telescope, the fourth and final of NASA's Great Observatories, and the cornerstone to NASA's Origins Program, launched on 25 August 2003 into an Earth-trailing solar orbit to acquire infrared observations from space. Spitzer has an 85cm diameter beryllium telescope, which operates near absolute zero utilizing a liquid helium cryostat for cooling the telescope. The helium cryostat, though designed for a 2.5 year lifetime, through creative planning now has an expected lifetime of 5.5 years. Spitzer has completed its in-orbit checkout/science verification phases and the first two years of nominal operations, becoming the first mission to execute astronomical observations from a solar orbit. Spitzer was designed to probe and explore the universe in the infrared utilizing three state of the art detector arrays providing imaging, photometry, and spectroscopy over the 3-160 micron wavelength range. Spitzer is achieving major advances in the study of astrophysical phenomena across the expanses of our solar system to both the earliest formations of our universe to it edge. Many technology areas critical to future infrared missions have been successfully demonstrated by Spitzer. These demonstrated technologies include lightweight cryogenic optics, sensitive detector arrays, and a high performance thermal system, combining passive radiation with cryogenic cooling, which effectively cooled the telescope in space after its warm launch.

Although Spitzer has seen great success, its road to launch and operations was filled with many pot holes and stumbling blocks. These were driven by historical issues (e.g. the mid-stream transition from the cheaper/faster/better paradigm, an extremely long development phase, software inheritance issues, and an inexperienced development staff). A competing challenge was Spitzer's unique need to be fully flight ready before launch (i.e. no cruise period for completion of the implementation typical to planetary missions). These challenges were further magnified by the finite life of the cryogen system combined with the occurrence of all mission critical events within the first few hours after launch rather than the months or years typical in deep space missions.

This paper describes how the project was able to overcome these stumbling blocks along with changes in philosophies, experiences, and lessons learned. It will describe how projects must invest early or else heavily later in the development phase to achieve a successful operations phase.

The result for the Spitzer Space Telescope was a successful launch of the observatory followed by an extremely successful In Orbit Checkout/Science Verification phase and a subsequent successful operational phase.

I. Introduction

Spitzer Space Telescope, the fourth and final of NASA's Great Observatories and the first mission in NASA's Origins Program was launched 25 August 2003 into an Earth-Trailing heliocentric orbit. The observatory was

* Spitzer Space Telescope Project Manager, Jet Propulsion Laboratory, Astronomy & Physics Directorate, 4800 Oak Grove Drive/Mail Stop 264-767, Pasadena, California, USA 91109.
† Spitzer Space Telescope Mission Manager, Jet Propulsion Laboratory, Astronomy & Physics Directorate, 4800 Oak Grove Drive/Mail Stop 264-767, Pasadena, California, USA 91109.

designed to probe and explore the universe in the Infrared. Before primary science data could be acquired, the observatory was initialized and commissioned for science operations during the In-Orbit-Checkout (IOC) and Science Verification (SV) phases. These phases were carried out over the first 98.3 days of the mission. The first 62.7 days were to bring the facility on-line safely and expeditiously while verifying the functionality of the instruments, telescope, and spacecraft demonstrating that it met the Level 1 Requirements. The next 35.6 days were to demonstrate observatories capabilities for autonomous operations and its overall readiness for nominal science operations. Because the observatory lifetime is cryogen-limited these operations were designed and executed in a highly efficient manner, allowing them to be completed successfully even though they had to resolve during this period four (4) major anomalies, including the impact of the most intense solar storm in the century. Subsequent to the IOC/SV phase, the observatory has performed exceptionally well for the past 2 ½ years of nominal science operations.

1.1 Mission Overview

The Spitzer Space Telescope (Figure 1) consists of a cryo-telescope assembly (CTA), spacecraft (S/C), and three science instruments (SI): the Infrared Array Camera (IRAC), the Infrared Spectrograph (IRS), and the Multiband Imaging Photometer for Spitzer (MIPS). The science instruments collectively operate over the wavelength range 3 µm to 160 µm. Each SI consists of a cold assembly mounted in the cryostat with warm electronics mounted in the spacecraft (S/C) bus. The CTA has an outer shell designed to radiate heat to cold space in the anti-Sun direction while being shielded from the Sun by the solar panel assembly on the sun side. The CTA outer shell surrounds a series of thermal shields, the 85-cm telescope, the cryostat, and the cold instruments. The S/C bus contains the subsystems required for housekeeping and control engineering: telecommunications, reaction control, pointing control, command and data handling, power, and fault protection. In addition to the SI cold assemblies, a pointing calibration and reference sensor (PCRS) is located in the cold focal plane. The PCRS works at visible wavelengths, providing the ability to calibrate the reference frame between the SI and the externally mounted star tracker used by the pointing control subsystem (PCS).

Spitzer was launched in a "warm configuration" in which the vacuum shell surrounded only the instrument chamber and the helium tank. This is in contrast to the cold launches of its predecessors whose vacuum chamber encapsulated the telescope, science instruments, and the superfluid liquid helium tank. Spitzer's warm launch facilitated significant reductions in the vacuum chamber size and mass. This in turn reduced the cryogenic consumption rate reducing the required volume of superfluid helium. This unique design allowed a reduction in the helium of over 3200 liters. The telescope is attached to the top of the vapor-cooled cryostat vacuum shell. The telescope was launched warm, and cooled on orbit over a period of 45 days to its operating temperature of 5.6 K.

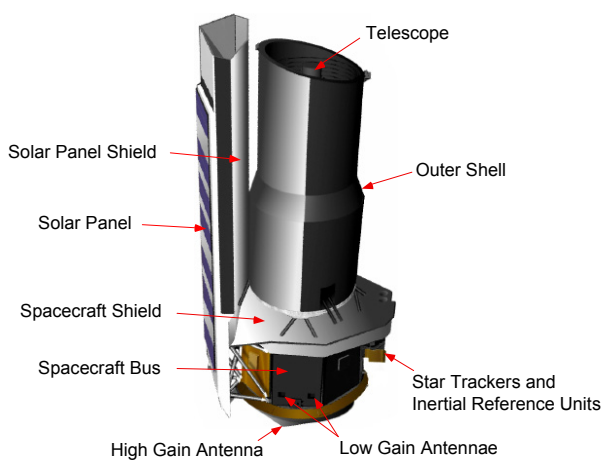

Figure 1: Spitzer Space Telescope

Spitzer was launched from Cape Kennedy on a Delta 7920H launch vehicle and injected into an escape trajectory, resulting in a heliocentric orbit in which the observatory moves around the Sun in roughly the same orbit as the Earth. (For a more in-depth discussion of the Mission Design, see J. Kwok, et.al [a]). The observatory slowly drifts away from the Earth at an average rate of 0.11 AU/year. This orbit eliminates the effect of heat input from the Earth, allowing the unique cryogenic design to achieve an expected mission lifetime of ~5.5 years using 335 liters of superfluid helium. The detector bath temperature is at 1.4 K and the outer shell is at 34 K. To maintain the telescope at its necessary operating temperature of 5.6 K, 5.2 mW of cryostat power dissipation is required to produce enough effluent helium vapors to maintain the telescope at its desired temperature. To facilitate this, a heater was placed in the helium bath to make up the difference between the required 5.2 mW and the heat dissipation produced by the active SI. Each instrument when powered dissipates energy with the average consumption of 2.9 mW for the IRAC, 2.3 mW for IRS and 1.7 mW for MIP. This variation between instruments has necessitated an active thermal management of the makeup heater for instrument transitions to maximize the mission length by minimizing the helium consumption.

The mission was designed for easy operability, with the heliocentric orbit providing a very efficient observing environment, with no eclipses or occultations, with excellent sky access and visibility (sun angle between 80^0 and 120^0), and with continuous viewing of the ecliptic poles. To further reduce operations complexity, only one instrument operates at any time. The heliocentric orbit has also eliminated the need for station-keeping maneuvers, thus eliminating the need for a navigation system. The drawback of this orbit, however, is that the maximum available downlink data rate drops as the observatory drifts away from the earth.

1.2 Historical Perspectives

During the Spitzer Project's development, many unique circumstances were faced. Several of these, though not unique to Spitzer, had significant impact to its development. Each will be addressed below.

1.2.1 Extremely Long Development Phase

Spitzer's development period extended from the time of the Announcement of Opportunity in 1983 until its launch in August 2003. During this period of time, the observatory underwent many changes. One such example was its name or acronym, SIRTF. Early in its development the observatory was known as the **S**huttle **I**nfra**R**ed **T**elescope **F**acility because it was scheduled for launching aboard a shuttle. Later it evolved into the **S**pace **I**nfra**R**ed **T**elescope **F**acility as it transitioned first into a Low Earth Orbiter, to a High Earth Orbiter, to a Libration Point Orbiter and finally to the Solar Orbiter of today. This acronym had such tenure that at the renaming ceremony which followed the successful In-Orbit-Check Out, NASA's Administrator said that SIRTF had come of age and no longer should be know by a nick-name but by its new name, the Spitzer Space Telescope, thereby removing the well used, comfortable, and well known name, SIRTF. For the remainder of this paper, its new name, Spitzer, will be used in lieu thereof.

During this long development period, Spitzer's design also changed as noted above from the Shuttle to the present Solar Orbit design. Other changes included launch vehicles, tracking antennas, size/mass, lifetime duration, detector design and configurations and of course mission cost. Figure 2 enumerates the evolution of these changes.

	'72 – '84	'84 – '88	'88 – '92	'92 – '94	'94-'96	'97
Orbit	300 km	900 km	70k – 100k km	Solar	Solar	Solar
LV	STS	STS, OMV	Titan IV	Atlas IIAS	Delta II 7920	Delta II 7920H
Tracking	TDRSS	TDRSS	DSN 26M	DSN 34M	DSN 34M	DSN 34M
Mass (kg)	4500	5560	5500	2460	750	<929
Lifetime	30d + …	2y + …	5y	3y	2.5y	5y
Primary Mirror (cm)	100	95	95	85	85	85
Helium (litre)	350	6600	4000	920	250	350
Wavelength (μm)	2 - 2000	1.8 - 700	1.8 - 700	2.5 - 200	3.6 - 160	3.6 - 160
Detectors		~10,000	~50,000	~140,000	~350,000	~350,000
Cost	Godzillian $	Godzillian $	~$2B	$860M	<$500M	450M

Figure 2 –Chronological Changes to Spitzer (See J. Kwok[b])

A more extreme example of the evolution is illustrated in the change in basic design of the observatory. Note the evolution with time from left to right in Figure 3 below.

In 1994, Faster/Better/Cheaper (FBC) entered the scene with all of its inherent shortcomings as well as its marketing strengths of reducing costs. Additional changes occurred including the warm launch design and the availability of the heavier lift launch vehicle. These changes were enablers which collectively reduced the cost adequately to allow mission acceptance and approval at the Preliminary Design Review in 1997. It was thru this period of time that the operational aspects of the mission were only defined at a very high level, typical of Pre-Phase A & Phase A designs.

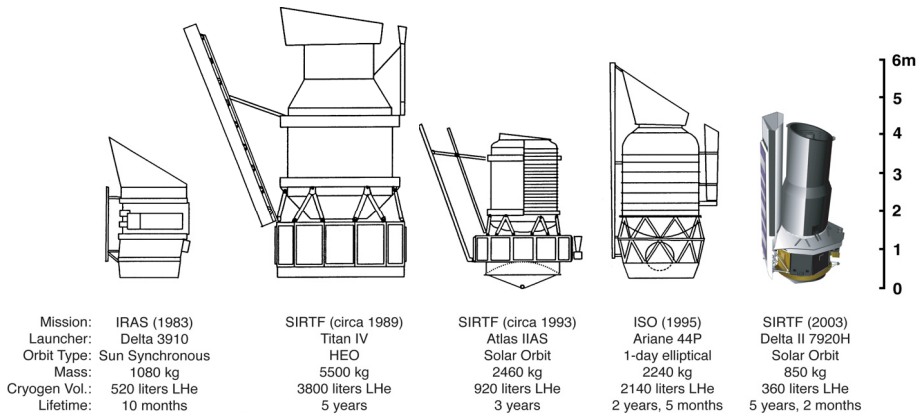

Figure 3 –Spitzer Design Evolution

1.2.2 Faster/ Better/Cheaper Phase

It was NASA's assertion that by using the FBC paradigm, (See D. Baker, et.al. [c]) projects could be developed and flown for significantly less expense than history had demonstrated. This would be accomplished by streamlining project management through using contractor's proven processes, large heritage in hardware and software to minimize risk, reduction in formal documentation and requirement specification, and through use of proven technologies

NASA began using the FBC process to manage projects as early as 1992. However, by 1999 FBC had fallen on hard times with the failure of four of the "so called FBC approach" missions. By 2000, FBC had become one of those fallen dinosaurs whose only remains were dry bones. There was a definite residual impact on flight projects that were already in the development pipeline, Spitzer being one of them.

1.2.3 Software Inheritance

Software inheritance, the significant dollar saver, turned out to have many special criteria for success. When software was inherited by missions under a single contractor, the inheritance benefit has proven to be acceptably well represented. However, in the cases where that inheritance is between companies or even between development individuals the NIH (**N**ot **I**nvented **H**ere) factor takes form. Under this condition, the developer discovers code which possibly is inadequately documented or has "too much documentation" to spend the time necessary to fully understand it. The developer then says, "I can do that myself in a matter of minutes, hours, etc." not realizing the additional test requirements associated with new code as well as the potential dual flow paths that might result in the software because of failure to remove all of the "inherited" code.

It has been demonstrated that the software inheritance benefit can be lumped into two categories. The first category is that which is developed by a single programmer or team charged with the detailed maintenance and future mission development and enhancements (i.e. becoming the perpetual custodian of the code). The second category which is that developed and documented to insure future extensibility without responsibility for any future development. History has shown that in the 1st case, software inheritance is significant due to the in-depth understanding of the software design, thus enabling maximum usage of the existing code. Multiple examples demonstrate this from JPL's Advanced Multi-Mission Operations System (AMMOS) to the multiplicity of commercial software packages available on the market. Modification is always cheaper and better if the developers make the change. In the case of the 2nd category, although documentation exists, it has been demonstrated that Ego-less Programmers DO NOT EXIST. This attitude generates in them a need to create their own code because they feel that they can do it either better, or faster, or shorter, or smarter. It is often the result of a "it takes more time to read the documentation than to re-write the function" mentality. Thus, inheritance value is often over-rated and seldom proven to be fully realizable, which was Spitzer's experience.

1.2.4 Distributed Operational Environment

As the project development came fully into focus, a distributed operational environment was beginning to form. That organization was with Project Management, Science and Mission Operations at JPL and with the spacecraft engineering functions at Lockheed Martin Space Systems in Sunnyvale, California. This distributed environment was altered when in July 1996, the NASA Associate Administrator for Science directed the establishment of the SIRTF Science Center (SSC) which would be located at Caltech. This science center would be similar to the Space Telescope Science Institute (STSCI) which was supporting the Hubble Space Telescope and would provide all science support operations for the project. With this change, Spitzer's operations were further modified moving the science operations to the Caltech Campus from JPL.

II. Observatory Operations

The Spitzer Observatory was launched in August, 2003 from Cape Canaveral aboard a Delta II Heavy Launch Vehicle. Efficient and effective operations for the Spitzer Space Telescope are crucial to harvesting the full scientific benefit of this final Great Observatory. There are two equally important pieces to Spitzer's Operations; the Mission Operations and the Science Operations. Failure to do both well would result in wasting cryogen (thereby reducing mission life) or disappointing the scientific community and public with poor data products. The Mission Operations work was to be performed largely at JPL and Lockheed while Science Operations at the SSC.

2.1 Mission Operations

The Mission Operations System (MOS) includes the hardware, software, people, processes, and procedures that enable and execute Spitzer flight operations. MOS is responsible for operating the Observatory and maintaining its health and safety. MOS is responsible for scheduling engineering activities, interfacing with the DSN and building the integrated sequences containing the integrated science and engineering requests, and radiating them to the observatory where they are stored awaiting execution. After execution, MOS receives and processes telemetry from the observatory (via the DSN) and delivers science and engineering data to the Spitzer Science Center (SSC).

The Mission Operations (MOS) team is geographically distributed with each piece playing a specific role. The Observatory Engineering Team is located at Lockheed Martin in Denver while the other teams and management reside at JPL. Factory support is also provided by workforce from Ball Aerospace & Technologies in Boulder, CO and Lockheed Martin Space Systems in Sunnyvale, CA. Mission Operations support is provided through two Mission Support Areas (MSA); one in Denver and one at JPL. The JPL MSA houses the Mission Manager and Flight Control Teams providing the command and control functions to the project, whereas the Denver facility houses the Observatory Engineering Team. Two hybrid hardware testbeds (simulators) were built around flight-like avionics hardware are maintained in Denver for the duration of the mission to support any necessary troubleshooting, testing, and software development

2.2 Science Operations

The Spitzer science program is being conducted by the SSC which is located on the Caltech campus. The Science Operations is responsible for the selection of the Spitzer science program and for the preparation of observation requests, which execute that program. To simplify operations, there is only one request per observing mode and only 8 distinct observing modes. In addition, Science Operations like the MOS is responsible for software, people, processes and procedures that enable the execution of that science program. Integration of science requests, Astronomical Observation Requests, with Spacecraft Engineering Requests (used for scheduling routine spacecraft engineering activities such as momentum management, PCS calibrations, and data downlinks) and Instrument Engineering Requests are performed by Science Operations. Only one instrument is powered on and taking actual science data at a time. Block scheduling is used so that a given instrument is operating for about 7 to 14 days at a time. After this period, the instrument is powered down and science data collection cycles are initiated to one of the other two instruments. Following execution of the science program on the Observatory, Science Operations is responsible for the processing and eventually archiving of the science and supporting engineering data upon completion of its processing through SSC's pipeline software. The processed data, raw data, suitable intermediate data products and calibration frames are placed in the Science Archive.

III. Observatory Uniqueness

Observatory class missions (observatories of the Great Observatory class) are unique in their design as well as their utilization compared to planetary missions. Although they have the very same subsystems and components that planetary missions have, they have unique drivers working upon them. One of these is the non-existence of a formal Mission Plan identifying when and what the science is and the schedule for its acquisition and the maneuver strategies to be used including trajectory correction, orbit insertion, or station-keeping maneuvers. Another is found in the interface to science where rather than a Principal Investigator (PI) led science team which is within the project organization there is a science center which acts as the interface to the broadest science community from which proposals (grants) are selected for execution on the observatory. This proposal oversight is usually performed by a science center; for Spitzer, it is the Spitzer Science Center (SSC) at Caltech. It is these proposals which determine the actual science that will be acquired with the observatory. In the case of Spitzer, annual proposal calls are made to allow for follow up observations against previously acquired science. The science centers also provides for pipeline processing of the data as it is returned and then distributed to these remote requesters for its analysis. Another significant difference is an observatory's very formidable In-Orbit Check Out period ranging from several months to as much as one year of the mission to certify that the facility is capable of supporting the broadest science community's requests. In addition to the aforementioned set of general observatory unique attributes, Spitzer's uniqueness is heavily driven by superfluid helium usage, instrument cooling requirements, and no Cruise period.

3.1 Need for Instrument Cooling

Central to Spitzer's uniqueness is the infrared instruments' need for a cold focal plane from which to extract images. The uniqueness of infrared instruments is their ability to measure the radiant heat being given off by their targets, but only when the target is warmer than the instrument's focal plane. Spitzer was designed to minimize its own heat generation while providing capability to maintain the focal plane temperatures at the required level for data capture. (For Spitzer's Multiband Imaging Photometer for Spitzer (MIPS), the lowest operating temperature requirement is 5.6 K). This cooling is accomplished through both passive and active cooling processes. The passive effort, which is heavily dependent upon the thermal design of the observatory including its silver and black exterior paint which maintains the telescope's outer shell at about 34 K. To reach the necessary focal plane temperatures, controlled heating of the helium in the cryostat is utilized. A "makeup heater" within the cryostat, when activated, raises the temperature of the liquid helium. At the transition point, the helium evaporates, exiting the cryostat housing through a porous plug which allows the escaping helium as it moves along its escape path to cool the focal plane and telescope housing to the desired targeted temperature. The observatory helium capacity at launch was 335 liters with an expected mission life of 2.5 years. Without the cooling provided by the active helium usage, 2 ½ of the instruments will no longer provide meaningful science because of the data saturation; the background heating will overwhelm the target's radiated heat.

3.2 No "Get Well" Cruise Phase

In the case of missions which have critical consumables (i.e Spitzer's superfluid helium), time is a most critical parameter both before as well as after launch. Historically, the period before launch is filled with completion of all critical operational activities. Oft times, critical development activities which are "left over" are allowed to slip into the post launch timeframe if they are not required until much later in the mission. E.g. Orbit insertion design, operations and training. For planetary missions, these deferred activities become part of the Cruise Phase development including such things as flight and ground software as well as operational training for these distant operational tasks. Spitzer could not accommodate any "left over developments", requiring that the flight team was fully functional and trained at the time of lift-off from Cape Canaveral. In the case of post launch time delays, post launch science operational efficiencies must be reduced or fail to maximize the science potential of the mission. Given that there is no Cruise Phase for observatories, operations must be ready to go at launch. All personnel training, system development, and system testing had to be completed prior to launch. The Spitzer Science Center had to be prepared to process everything from the science proposal submittal process to the science planning process on the front end whereby these proposals are translated into science activities. The Mission Operations had to be able to perform the sequence constraint checking and command translation in the sequence generation process and its subsequent transmission through the Deep Space Network (DSN) for receipt on-board the observatory for storage and future execution. Likewise, Mission Operations had to be prepare for the data return, either science or engineering from the observatory, through the DSN to the ground for level 0 processing. The Science Center preparations required their readiness to receive the data and then to process it through the SSC pipeline processing and subsequently transmit the pipeline products to the requesting scientist.

3.3 Minimization of Cryogen Usage

Another uniqueness of the Spitzer observatory was its "expendable cryogen" which began to boil off immediately upon completion of the topping off procedure which was completed approximately 12 hours before launch. This boil off will continue until all the helium is exhausted. The slower the boil off, the greater the science returns. Throughout the cryogen mission lifetime, the operations teams will be challenged to control the rate of boil off through judicious use of the heat generating elements of the observatory. However, because real science return did not begin until after the characterization periods of IOC/SV were completed, every effort was expended to facilitate the timely completion of those activities and the expeditious observatory's transition into nominal operations. (See S. Linick, et.al. [d] for more IOC/SV experiences). Through a well planned and judiciously executed IOC/SV period, the observatory was able to begin the science usage of the helium in 98.3 days after launch, only 6 more than the pre-launch plan had proposed in spite of four Safe Mode Entries, largest solar storm of the century and one Stand-by Mode Entry.

3.4 Minimization of Cryogen Usage

Spitzer was the first cryogen mission to use a warm launch strategy. With the exception of the helium bath, the entire observatory was at ambient temperature at launch. To cool the observatory either the passive cooling from space or active cooling from the cryogen was required. From about 12 hours before launch when the "cryostat top off" line was discontinued, the superfluid helium began to boil off, reducing the effective lifetime of the mission. Throughout the ~90 day IOC/SV period, every effort was taken to facilitate a timely completion of the observatory's certification and science verification. Beginning pre-launch, techniques and studies had been performed to evaluate methods and/or techniques that could be used to maximize the effective life of the cryogen. (See P. Finley, et.al for full details[e]). Procedures were implemented early in the mission to maximize lifetime including the launch turn-around requirement, in the event that our launch were to be slipped greater than 24 hours, a one day launch stand-down would be required to allow recharging of the cryostat. During IOC/SV, vigilance was given to minimize down time in the event of observatory anomalies. Extensive test planning and testing pre-launch proved extremely effective in this critical phase, facilitating a rapid return to operations from the several anomalies experienced.

The first year of operations proved very fruitful in identifying ways to save cryogen. (See C. Lawrence, et.al [f]. It was well understood that the instrument which required the coldest temperature would likewise be the instrument effectively consuming the most cryogen. As a result, an optimization of the instruments was made to have the longest operational phases for those which required the lowest power demands. As a result, the campaign strategy laid out in the initial Baseline Instrument Campaign (BIC) accounted for campaign durations of 9, 8, and 6 for the IRAC, MIPS and IRS campaigns respectively.

The next major strategy change was to "float" the telescope temperature during the IRS and IRAC observations. From inception the largest driver on cryogen usage was the MIPS, the instrument which required the coldest temperature. Because the other instruments could operate at much warmer temperatures, a "make up heater – pulse mode" was proposed. Rather than keeping the telescope temperature at 5.6 K, the temperature was allowed to float up. At a pre-determined time, (the time necessary to drive the temperature back down to the required MIPS operating temperature, the make-up heater would be pulsed cooling the telescope back to the required temperature in time for the observation. This proposal resulted in 13 days savings during the first year of usage alone. Along with this it was determined that the "pulses" could be used to in lieu of the annual Mass Gauge Measurements to determine the predicted helium life.

The next major change was an understanding that if the campaign durations were extended, the required make up heater pulses could be separated further, (i.e. extending the separation of the MIPS campaigns) thereby reducing the frequency which subsequently reduced the helium consumption. To minimize the potential effect on the instruments from the warmer temperatures, the campaign order was established to be IRAC, MIPS and then IRS. The three instrument campaign was changed from 21 to 35 days and the campaign duration changed to 10, 13 and 12 (e.g. 35 days cycle rather than the previous 21) days respectively.

Every effort has been spent to extend the predicted lifetime of the cryogen from the 2.5 year requirement to 5.5 years ± 72 days at this writing. Figure 4 illustrates the helium usage experience along with future predictions. Although many optimizations have been performed and improvements made, efforts continue to look for further ways of extending the cryogen life. (See Dodd, et.al. for additional methods [g]).

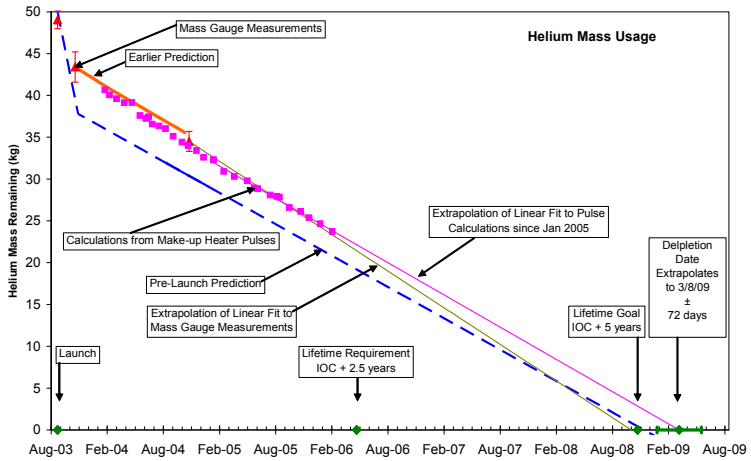

Figure 4—Helium Usage Chart

IV. Operations Status at Critical Design Review

With the aforementioned background, in 2000 the Spitzer Project found itself in the midst of Critical Design Reviews for both the flight and ground systems. However, unlike the flight system, the ground system failed its Critical Design Review due to a number of Review Board findings. The Review Board report (see A. Marwerth, et.al. [h]) identified thirteen (13) major findings which were supported by a history setting 97 Request For Action (RFA). This report precipitated a re-thinking of the way operations was being developed for the project.

The identified findings were as follows:

4.1 Organization; Roles and Responsibilities

With an operations re-organization having occurred just prior to the CDR due to the distributed organization, a Council had been established to lead the Operations. The Operational Teams would report directly to the Council. The Council consisted of a leader from each of the three areas, JPL Facilities Engineering, JPL Flight Operations and SSC Management. (See Figure 4). Control responsibility was dispersed between the several individuals collectively without any single individual in total control.

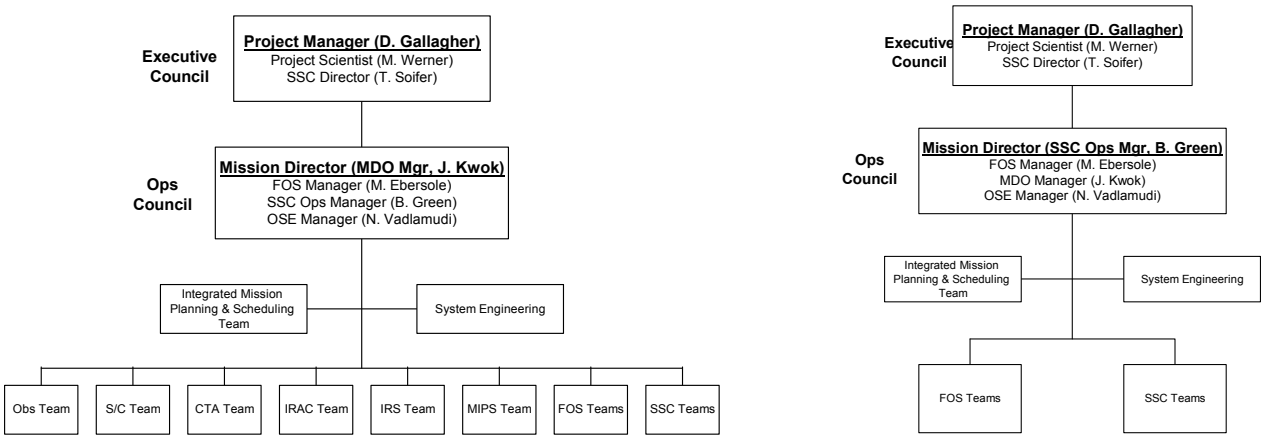

Figure 4 –CDR Spitzer IOC & Nominal Operations Management Plan

The Review Board noted the need for a single operations manager with past experience in developing operations products through the final spacecraft integration phase, and with experience preparing an operations team in the use of those products on-orbit. This manager should be deeply involved in the actual spacecraft testing using the operational tools and products to insure the operational capabilities existed to control and maintain the observatory—thereby enforcing the "TEST AS YOU FLY AND FLY AS YOU TEST"—montra. The Review Board also noted a need for a single organization chart containing all individuals involved in the operations along with their locations and hours available to support operational development given the planned use of development personnel in operations. In addition, functional responsibilities including software development and maintenance should likewise be noted to insure that all required functions are acknowledged and are being accomplished. In addition, the need to identify an enumerated list of all operational tasks, products, software and activities necessary for launch readiness was noted.

4.2 Integrated Critical Path Schedule

There existed no Integrated Schedule showing all the "work necessary to launch" (including flight and ground software, ATLO and operations test development and validation) activities.

Because of this shortcoming, the Review Board considered it impossible to assess the adequacy of the workforce for accomplishing the work in the available schedule as well as obtaining any insights into MOS/ATLO interactions to assess MOS's planned support to ATLO. To really "TEST AS YOU FLY" the MOS must be prepared to support ATLO.

In all presentations, very little was mentioned about MOS support to ATLO, leading one to believe that little thought has been given to the role of MOS in ATLO

4.3 Operational System Test Laboratory's Fidelity, Operations Capability, Schedule for Use

The Operational System Test Lab, O(STL), is a hybrid simulator consisting of a combination of spacecraft engineering units and/or math models including the science instruments of the observatory's subsystems. The fidelity of the O(STL) is critical in its ability to adequately model the actions/interactions of the various observatory components. This capability is used to support operations development as we test spacecraft blocks, commands and sequences; on-orbit the O(STL) is used to assist in the performing of anomaly investigations. Any discrepancy between the real observatory and the O(STL) results in a greater uncertainty in the results obtained when it is used to simulate the observatory's actions. As such the O(STL) is a key tool for operations both in the development as well as in the on-orbit phases of the mission. In addition, the O(STL) and the STL were both fully committed in support of the on-going Flight Software development leaving no time for its usage in support of operational needs.

The Review Board directed that the fidelity of the O(STL) be determined against the actual observatory, that its fidelity be evaluated against the operational needs, and that a schedule of the O(STL)'s usage by operations as well as its formal transition to the operations team be made to insure its availability to support required operational testing.

4.4 Operational System Documentation Baselining and Configuration Management

Given the Faster Better Cheaper paradigm, many requirement documents were not included in the development plans including Software Requirements, Ground Segment Requirements, Operations Configuration Management, etc. Further, many final versions of requirements and interface documents had only been scheduled for completion much later than that required for a CDR. Also, the configuration management (CM) process for the Project had not been fully implemented to include the operational configuration management needs. In addition, no consistent project wide problem reporting mechanism existed.

4.5 Virtual Machine Language (VML) Compiler Completion, Validation and Operations

The planned usage of the Virtual Machine architecture with its inherent flexibility, though attractive from a computing science standpoint, and although it provides a large range of capability for loading, managing and executing on-board sequences, is new to flight.

The Review Board recommends that very careful attention be paid to verification of the compiler and those aspects of the flight software as well as operations products that rely on its functionality. Simplification should be the operative word to prevent complexities during operations.

4.6 Training and Anomaly Scenarios

The planned staffing to perform the team and project training was considered to be insufficient given the complexity of the observatory. Inadequate detail has been provided as to Spitzer unique needs, the tools required for training, and amount of simulator time required, just adding to the unscheduled simulator issue noted in 4.3 above.

The Review Board felt significant bolstering of the staff was required in order to adequately train the Spitzer operations personnel as well as to adequately provide anomaly training. Special emphasis was suggested in the areas of safe mode recovery and loss of signal scenarios.

4.7 Need for Database Configuration Management (CM) Across Project

There is a perceived lack of configuration management for critical databases across the program. Databases include command and telemetry dictionaries and other Flight Software Configuration files that are sources for data which are used by multiple elements of operations.

The Review Board felt that the failure of an adequate CM system and adequate identification of critical databases must be resolved prior to the start of significant spacecraft testing and rigorously enforced throughout the ATLO period. The databases and related data must be carefully synchronized since they impact at least the following:

- Flight software
- Spacecraft test hardware
- Ground system used for commanding and telemetry monitoring
- Simulators
- Science center processing software
- PI team processing software

4.8 Command Sequence Development and Verification

Critical to launch readiness is the development, certification, and validation of the detailed blocks (sequencing macros) to be used by the uplink system and the Virtual Machine to operate the observatory. The need for a great deal of technical knowledge of the spacecraft, instruments, Virtual Machine and the ground system is critical.

The Review Board expressed concern associated with the complexity of the process and felt that because the ATLO team would be using Test Environment-Command & Telemetry (TECT) tool for its commanding whereas mission operations would be using the operational ground system for commanding, they may get out of sync with each other. This is especially true given there is no automatic way to translate procedures developed in the TECT environment into the mission operations environment.

4.9 Mission Operations Testing at ATLO

ATLO testing of MOS is critical to the success of the Spitzer program. Allocation of ATLO test program time is required to insure the overall mission success.

The Review Board noted that several items including Operational Readiness Tests (ORT), Mission Simulations, Sequence Verification, as well as training impact project resources and levy requirements on the ATLO program. Failure to have these items identified in a integrated schedule between MOS and ATLO leave their plans wanting.

4.10 Constraints and Flight Rules

The process for capturing, implementing and validating the flight rules and constraints was not fully described.

The Review Board noted that the Project needs to clearly define what constitutes a Flight Rule or a constraint, to include categorizing them into those which prevent damage, those that preserve science and schedule and others that may be just good practice.

4.11 Data Distribution to Spitzer (SIRTF) Users

The Review Board noted that there were no formal plans mentioned for distributing data to Spitzer users.

4.12 Lockheed Martin Support Area

Lockheed noted that the building in which their planned Mission Support Area (MSA) is to be located was for sale and relocation plans prior to that sale had not been made. Likewise, no guaranteed period of advanced notification of dislocation has been included in their sales agreement.

4.13 In Orbit Check Out

Given the limited lifetime of Spitzer, it is particularly important that the IOC period be well planned and executed. It is also necessary to be able to adapt to changes safely and on a short timescale. Although these facts are well recognized within the Spitzer project and a good start has been made on the definition of the IOC plan/requirement, little effort had been applied to understand the drivers (scientific, technical, financial, programmatic, etc) which control the stated 60 day duration.

The Review Board recommends that the IOC Plan/Requirements be completed in an expeditious manner and that the formal development of the operational IOC Plan be initiated post haste especially given the experience of both Hubble and Chandra.

4.14 Need for a Delta CDR

Findings include:

All CDR Review Requirements were NOT met.

The Review Board recommends holding a Delta CDR in the near term.

V. Operations Critical Design Review Response Plan

The project immediately began to prioritize the aforementioned findings. Most critical was acquiring the necessary operational staff. The first action of the project was to select an experienced MOS Development Manager and to begin his familiarization of the project and the outcome of the CDR.

5.1 Acquiring Experienced Staff

A review of the existing operational staff as well as the industrial partner's operational support plans, it became clear that the project was severely understaffed. This revelation was quickly followed by the knowledge that there were a restricted number of experienced personnel available to support the project. Recognizing that there was little time to train a new staff and yet a need given our 18 months to launch available schedule, a two prong staffing effort was established. First, there was established a "Red Team" which was to be made up of experienced operational personnel. Each of these members was to be made available for a fixed period of time. The second prong of the effort was the hiring of new personnel who would eventually fill the critical project positions. Working with the line organization individuals were identified for the Red Team and negotiations were accomplished with their respective projects for their time. The time agreed upon was a short 6 month period with various levels of commitment varying from 0.5 to 1.0 time. A second period of time for upwards of 3 months was also agreed to at a rate of 0.25 time. The Red Team, consisting of 6 very experienced personnel were assigned to lead their several tasks while the "new comers" were to look over their shoulders with the objective of transitioning at the earliest opportunity. At the end of the 6 month period or earlier, the "new comers" were to take charge with the "Red Team" looking over their shoulders during this second period of time. This idea significantly benefited Spitzer while minimizing the impact to other projects.

5.2 Addressing the Problems

With the Red Team in place, the tackling of the CDR Findings was initiated with the first effort to identify the contributing factors to those findings. Once discovered, corrective actions could be taken. Upon review of the findings, a great resonance with the four Historical Perspectives noted earlier was identified. The following responses to the CDR Findings were taken.

Organization: Roles and Responsibilities (Actions taken in response to Section 4.1 above.)

- Recruited additional staffing beginning with experienced Mission Operations Development Manager
- Developed Single Organization Chart integrating the Distributed Organizations
- Resolved Chain of Command Issues in roles and responsibilities eliminating Management Committees

- Transferred Operational Roles for Observatory Engineering to LMSSC's sibling, LMA because of their very experienced Operations Organization

Integrated Schedule (Actions taken in response to Section 4.2 above.)

- Scheduled and held an Integrated Schedule Meeting with all elements of the Project including Ground Data System (GDS), Mission Operations System (MOS), Spitzer Science Center (SSC), Flight Software (FSW), Assembly Test Launch Operations (ATLO), observatory flight/ground documentation (Command & Telemetry Dictionaries, Block Dictionary, Flight Rule), Simulation, flight/ground test scheduling, and Training areas
- Obtained agreements between Flight and Ground on schedule change control process—(However, this problem area persisted until well into ATLO requiring significant project oversight)
- Established the System Engineering Tests (SET) series of testing including Week in the Life Test with agreements between Flight and Ground for ATLO support—(difficult to obtain—greatly facilitated due to the experienced Ops personnel being brought on from LMA)

OSTL Fidelity, Ops Capability, Schedule for Use (Actions taken in response to Section 4.3 above.)

- Created a Plan for establishing the fidelity of the OSTL with the Flight System
- Established a cooperative relationship between Flight and Ground on use of OSTL having member of MOS Management on OSTL Usage Committee
- Established a transition plan for moving the OSTL from LMSSC to LMA
- Established a weekly scheduling/usage meeting of all users assuring adequate time for MOS testing
- Expanded the SoftSim (Software Simulator, previously used only for FSW checkout) capabilities to include terminals at LMA and JPL to facilitate the sequence (block and command) testing activities to reduce impact on OSTL
- Established a Simulation Policy which identified the "why" and "when" each type of simulation would be used/required—including requirements for SoftSim, OSTL, and/or Flight System testing

Ops System Documentation Baselining & Configuration Management (CM) (Actions taken in response to Section 4.4 above.)

- Established a Operations CM—obtained agreement to utilize the Multi-mission Operations (MMO) CM system, thereby obviating the need to develop project procedures, processes and problem reporting entities
- Obtained agreements with Project CM as to what Documentation required their Project CM vs OPS CM
- Included within the Operational CM all elements of MOS & SSC e.g. software, processes, procedures, documentation, Operational Interface Agreements (OIA), Software Interface Specifications (SIS), as well as Anomaly capture documentation
- Augmented Post Launch to include a FEAR Database providing a electronic access to the both flight and ground Idiosyncrasies electronically
- Established a transition date for moving Project and Operations CM into a single consolidated CM system

Virtual Machine Language (VML) Compiler Completion, Validation & OPS (Actions taken in response to Section 4.5 above.)

- Established a detailed plan for VML Compiler Completion by including VML development personnel into Ground System
- Utilized VML Compiler extensively with development and validation of Blocks
- Established policy as to extend the VML capabilities could be utilized on the Project, thus reducing risk by reducing flexibility
- Eliminated the planned Event Driven utilization due to inability to adequately validate the system

Training & Anomaly Scenarios (Actions taken in response to Section 4.6 above.)

- Completed the Personnel Training Plan identifying the roles and responsibilities of the Training Lead vs the Team Leads in performing personnel training

- Established Certification Criteria for all elements and individuals on the Project
- Developed set of Training aids including Video taping of area experts to be used with future staff roll-over, "Old Dog New Tricks" training, etc.
- Identified tests to be utilized for personnel training including extensive anomaly testing
- Integrated Personnel Training with the SET testing being performed in ATLO to establish operational experience with flight products and flight systems
- Established the 2nd Set of Eyes activities to maximize familiarization of the operations team with the flight system

Need for Configuration Managed Database (Actions taken in response to Section 4.7 above.)

- Established cooperative relationship between ground and flight establishing common "slices" of databases to be utilized for each specific tasks--included version of FSW, CMD, Configuration Files, GDS, test sequences, blocks, etc

Command Sequence Development & Verification (Actions taken in response to Section 4.8 above.)

- Reviewed the uplink process in detail validating all interfaces
- Established a SEQUENCE team in the MOS to perform the schedule translations and constraint checking products into binary for transmission to the observatory
- Brought MMO Sequence service on to rapidly establish the sequencing capabilities by utilization of established process and procedures
- Resolved the interface between SSC Scheduling and the MOS Sequencing tasks
- Constructed all test products utilizing this uplink process including the SET as well as the Week in the Life testing
- Insured that all uplink products were compliant with the Simulation Policy as to what sequence was to be simulated and on what simulator--insuring the generated sequences would operate consistently with the observatory—insuring that the execution of the sequence functioned as planned and that it performed what it was suppose to do

MOS in ATLO (Actions taken in response to Section 4.9 above.)

- Included MOS Management personnel onto the ATLO team to assist in advanced planning for MOS support
- Provided ATLO team support with MOS personnel on a regular basis--Observatory Engineering Team (OET) members became as knowledgeable as those who had developed the products; often demonstrated when the OET member would correct an ATLO member as to what action the observatory would do under a certain circumstance
- Established the "right seat/left seat" concept where ATLO personnel were in charge with the MOS personnel looking over their shoulder for the early ATLO/MOS testing and then for the later testing, reversing positions with the MOS leading the test with ATLO insuring flight system safety--ATLO personnel remained in charge of the Observatory but MOS personnel were ever present especially during the SET testing

Constraints and Flight Rules (Actions taken in response to Section 4.10 above.)

- Put in place agreements as to where each flight rule would be certified in the operational path—preserving the health and safety of the observatory
- Established a Mission Rules document to levy constraints upon the ground—preserving the integrity of the sequences, personnel, etc.

Data Distribution to Users (Actions taken in response to Section 4.11 above.)

- Determined to have been a simple Oversight at CDR, included in the Delta CDR
- Presented the planned Data Distribution along with timeline for nominal mission
- Deferred the IOC Data Distribution discussions until the IOC Design Review—(IOC has been deferred until after the Delta CDR

Lockheed Martin Mission Support Area (MSA) (Actions taken in response to Section 4.12 above.)

- Transferred Observatory Engineering (OET) operations from LMSSC to Denver LMA

- Expanded LMA's Multi-mission Operations MSA to include Spitzer support, relocating several other LMA supported projects due to the size of the OET
- Utilized LMA operational procedures and processes as appropriate with the addition of others as appropriate
- Relocated the OSTL to LMA utilizing the space in their simulation center—subsequently STL was also relocated to LMA after IOC

In-Orbit Check Out (IOC) (Actions taken in response to Section 4.13 above.)

- Selected an IOC lead (with some arm twisting)
- Established an IOC working group with members from all areas of the project (SSC, LMA, JPL)
- Convened IOC Status Review mid-way thru development to demonstrate progress toward an operational readiness at Operational Readiness Review
- Lessons Learned by IOC are noted in Reference [b]

Delta CDR (Actions taken in response to Section 4.14 above.)

- Held successful Delta CDR allowing continuation of the Spitzer operations development

VI. Lessons Learned

1. Establish a single Operations organization

2. Early in the development phase create an "integrated schedule" at both the project and operations levels to help prevent FSW/GDS mismatches while insuring testing compatibilities

3. Use an experienced organization for operations

4. Early participation of Ops in development and testing activities is essential

5. Use Ops tools to perform spacecraft subsystem, science instrument and system level testing

6. Minimize duplication of existing GDS capabilities by fully utilizing existing "supported" (institutional) GDS tools

7. Avoid point solutions by building nominal processes before designing the In-Orbit-Checkout (IOC) processes

8. Operational Readiness Tests (ORT) need to cover the most stressful situations

9. Give a lot of thought to IOC and to Ops training and rehearsals (See Reference [d] for detailed IOC/SV Lessons Learned)

10. Plan 24/7 DSN Coverage for entire IOC and SV periods

11. Transition operations from IOC mode to the Nominal Ops mode before losing full DSN coverage

12. Do not underestimate or take for granted the "easy" of "routine" parts of the mission, such as spacecraft FSW, Reaction Control Systems, power/thermal systems and Ground Support Equipment (GSE)

13. Value of inherited H/W and FSW is always overstated

VII. Conclusion

The operations recovery plan was an aggressive program to bring the Spitzer Space Telescope online and from the point of having failed the Critical Design Review. Fortunately programmatic and program wide support was available to allow for the significant changes required to preserve Spitzer's launch readiness and to support the time-critical operational support of IOC/SV during its highly constrained operations period of 98.4 days (note that 4.4 of those days were lost to the solar storm). The success of Spitzer resulted from the outstanding support provided by the Project Management, NASA Headquarters and the energized development and operations organization allowing us not only to meet our pre-launch objectives but to exceed them in the outstanding performance of Spitzer in its first 2.5 years of operations.

Getting Spitzer operations to launch readiness provided a significant and unique set of challenges. Those challenges continued throughout the IOC and SV phases. The ability to complete those significant hurtles and then to transition into the nominal science operations of this fantastic project were only accomplished by the dedicated team of engineers and scientists supporting the development and operations of the Spitzer Space Telescope.

Acknowledgments

The work described in this paper was carried out at the Jet Propulsion Laboratory, California Institute of Technology, Lockheed Martin Space Company, Ball Aerospace and Technologies Company, the University of Arizona, Cornell University, and the Smithsonian Astrophysical Observatory under contract to the National Aeronautics and Space Administration.

References

[a] J.H. Kwok, M. Garcia, E. Bonfiglio, S. Long, "Spitzer Space Telescope Mission Design", SPIE 2004 Conference, Glasgow, Scotland, June 21-25, 2004, [5487].

[b] J.H. Kwok, private notes of Spitzer history

[c] D.N. Baker, F. Bagenal, R.L. Carovillano, and et.al., "Scientific Goals Should Drive NASA's 'Faster, Better, Cheaper' Approach to Missions", *National Academy of Science Report Summary,*03.15.00

[d] S.H. Linick, et. al., "Spitzer Space Telescope In-Orbit Checkout and Science Verification Operations", SpaceOps Proceedings, 2004.

[e] P. Finley, et.al., *"Flight Cooling Performance of the Spitzer Space Telescope Cryogenic Telescope Assembly",* Astronomical Telescope and Instrumentation, SPIE 2004 Conference, Glasgow, Scotland, June 21-25, 2004, [5487-02]

[f] C. Lawrence, P. Finley, et.al., "Optimizing cryogen utilization on Spitzer Space Telescope", SPIE 2004 Conference, Glasgow, Scotland, June 21-25, 2004, [5487].

[g] S. Dodd, *"The Spitzer Space Telescope's Performance: Getting the most out of a Great Observatory"* SPIE 2006 Conference, Orlando, Florida, May 24-31, 2006, [6270-02}.

[h] A. Marwerth, et.al., "Board Report—SIRTF Mission Operations System Critical Design Review" held on 19-21 September 2000, Winnett Center, Caltech Campus.