NASA STARDUST Sample Return Mission

Thomas C. Duxbury
and the STARDUST Flight Team
Jet Propulsion Laboratory
California Institute of Technology
Pasadena, CA USA

35th COSPAR Scientific Assembly
Paris France
Salle 242 A
14:30
23 July 2004

STARDUST

- *4th NASA Discovery Project*
  - *Mars Pathfinder, NEAR, Lunar Explorer prior Missions*
- *1st NASA Unmanned Planetary Sample Return Mission*
- *NASA, Univ of WA, JPL and LMA Partnership*
- *Prof. Donald Brownlee, University of Washington, PI*
  - *Co-I's*
    - *Drs. Martha Hanner, JPL, Fred Horz, JSC,*
    - *Tony McDonald, UK, Scott Sandford, ARC,*
    - *Zdenek Sekanina, JPL, and Mike Zolensky, JSC*
  - *Co-I's with Payload Instruments*
    - *Aerogel Collector - Dr. Peter Tsou, Deputy PI, JPL*
    - *CIDA - Dr. Jochen Kissel, MPI fur Kernphysik,*
    - *DFMI - Dr. Anthony J. Tuzzolino, U of Chicago*
    - *NavCam - Dr. Ray Newburn, JPL*
    - *Radio Science - Dr. John Anderson, JPL*
    - *High Rate Attitude - Dr. Benton Clark, LMA*

STARDUST SCIENCE OBJECTIVES

Primary Requirement: Collect 1000 Comet particles >15 μm at encounter velocity < 6.5 km/sec and return to Earth

Secondary Requirements:

- Collect 100 Interstellar particles >0.1 μm and return to Earth.
- Provide ≥ 65 images of P/Wild 2, having a resolution of at least 67 μrad per pixel, taken within 2000 km of the comet nucleus through selected filters;
- Provide in situ particle analysis for comet coma flythrough capable of resolving abundant elements in cometary solids

Tertiary Requirements:

- Provide in situ particle analysis for interstellar and interplanetary dust;
- Measure dust mass fluence, large particles and comet mass upper limit
- Provide dust flux measurement of 10^{-9} g to 10^{-4} g particles

Trajectory Overview

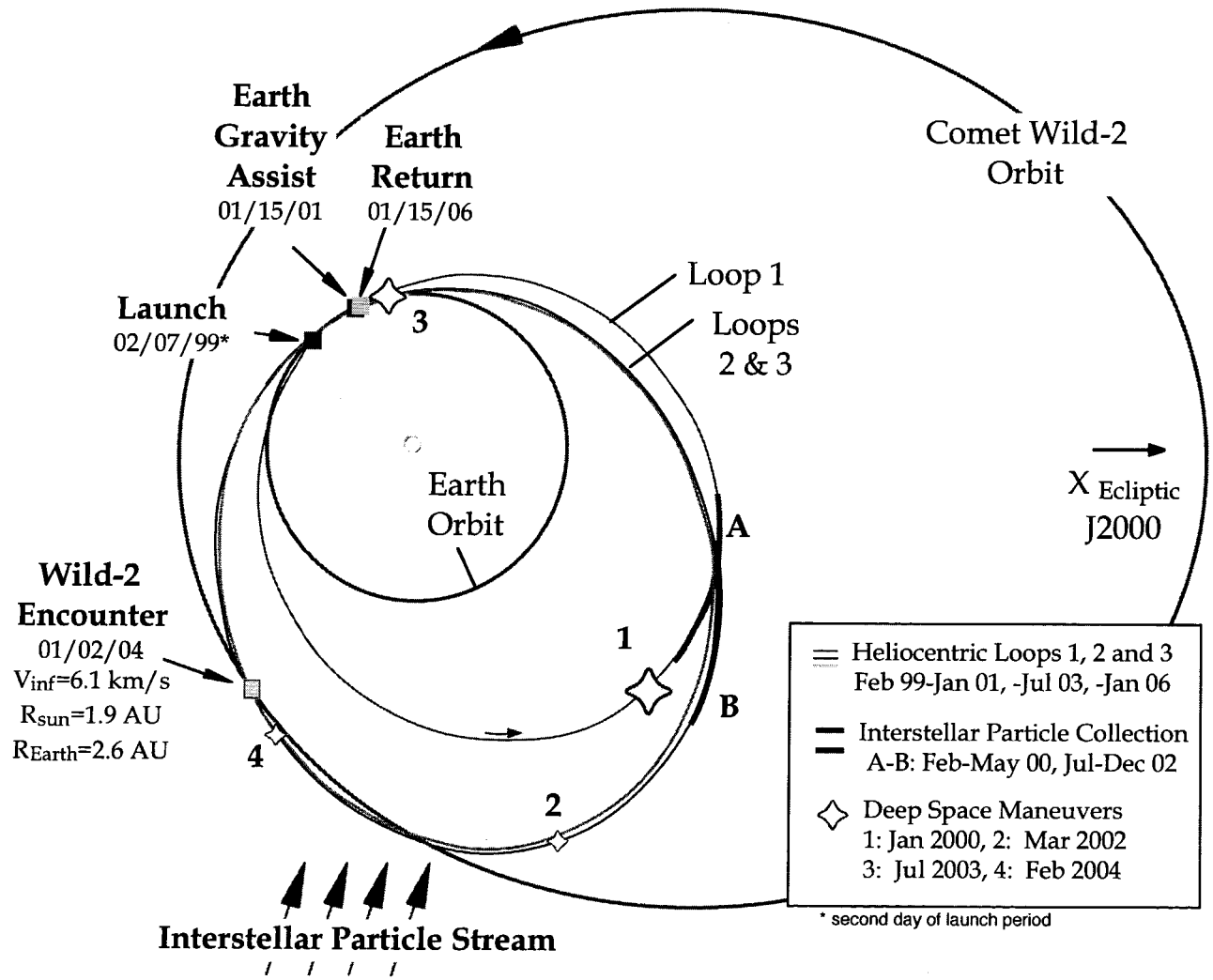

* second day of launch period

Stardust Sample Return Capsule (SRC)

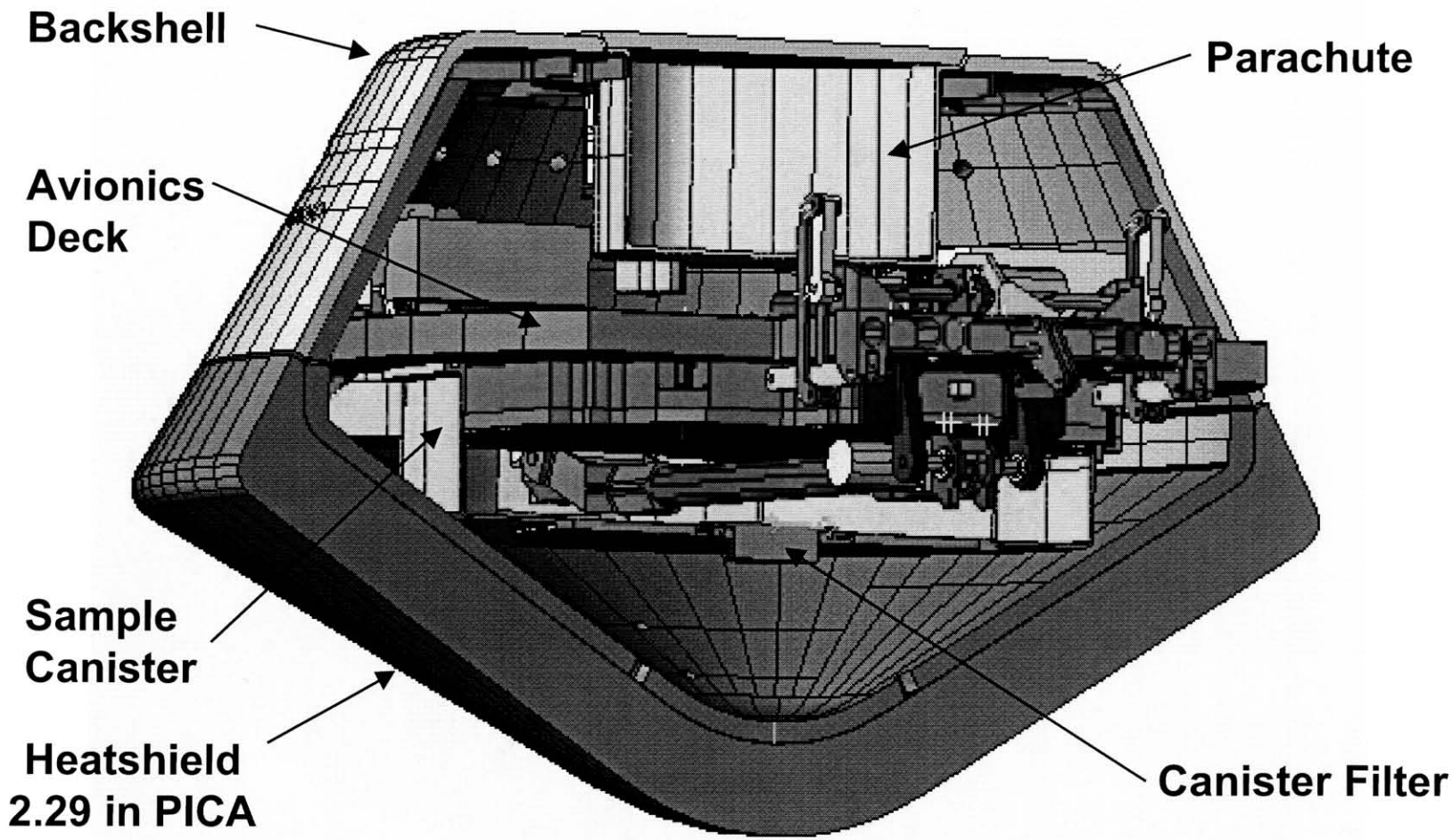

AREOGEL

Coma & Interstellar Dust Collection

Dr. Peter Tsou, Deputy PI

To collect the particles without damaging them, STARDUST will use an extraordinary substance called aerogel - a silicon-based solid with a porous, sponge-like structure in which 99 percent of the volume is empty space. Aerogel is 1,000 times less dense than glass, another silicon-based solid. When a particle hits the aerogel, it will bury itself in the material, creating a carrot-shaped track up to 200 times its own length, as it slows down and comes to a stop - like an airplane setting down on a runway and braking to reduce its speed gradually. Since aerogel is mostly transparent - sometimes called blue smoke - scientists will use these tracks to find the tiny particles.

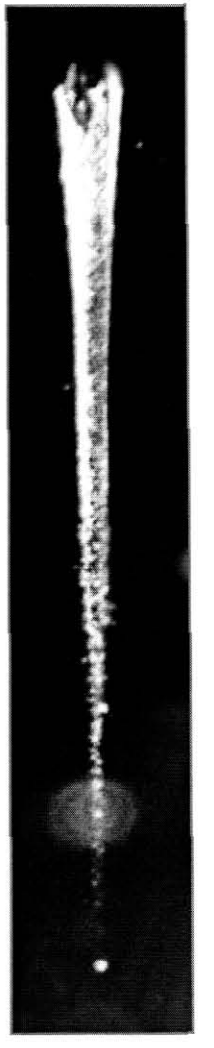

CIDA - MPI

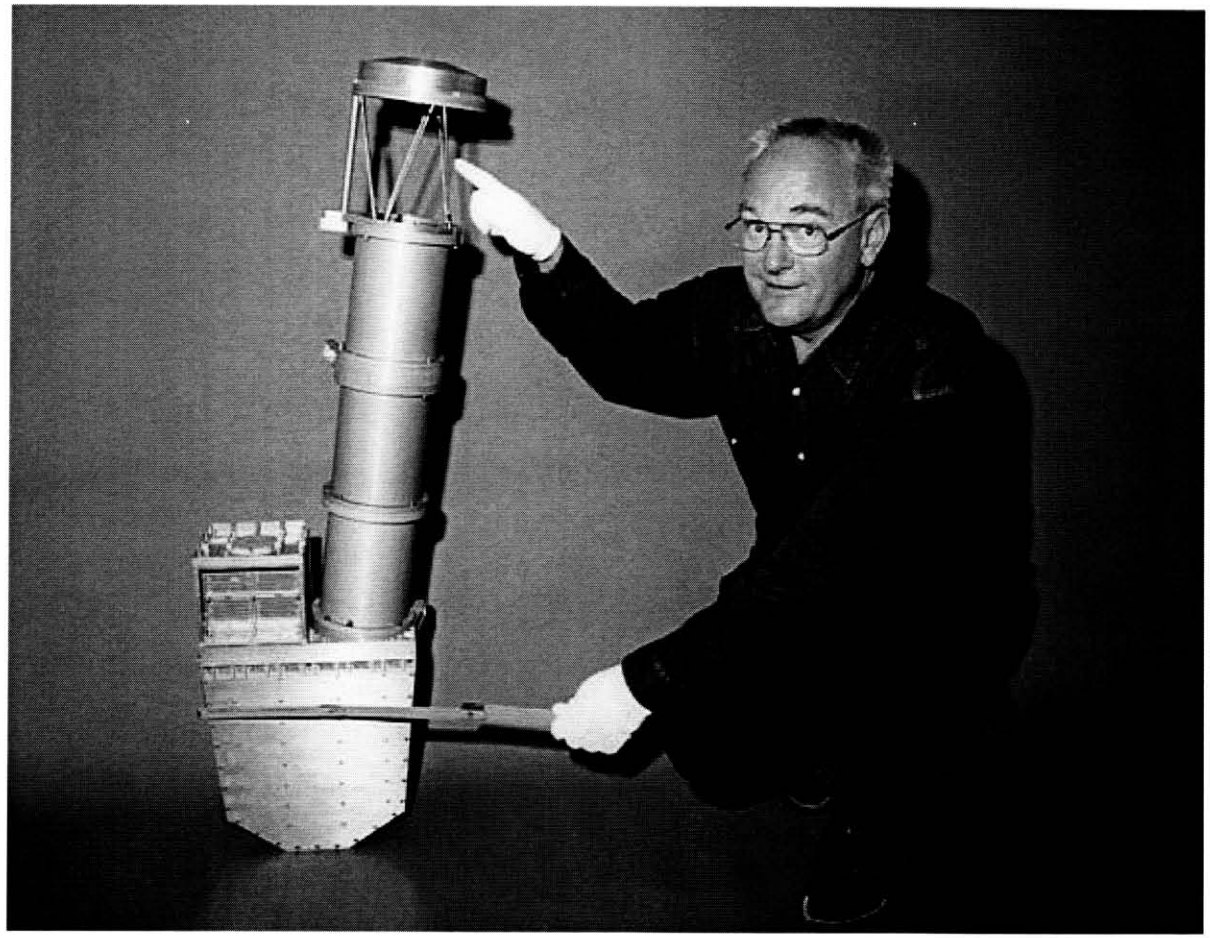

Dr. Jochen Kissel with CIDA

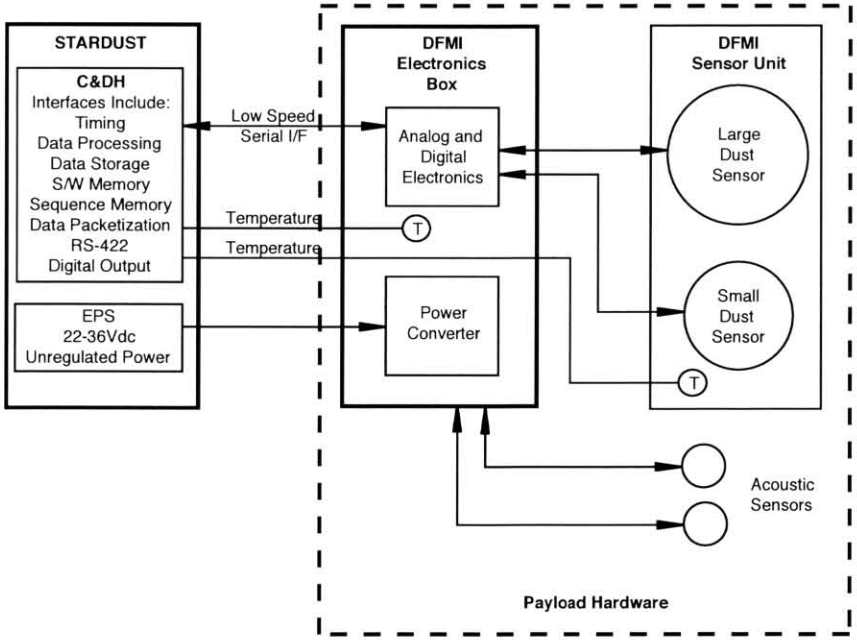

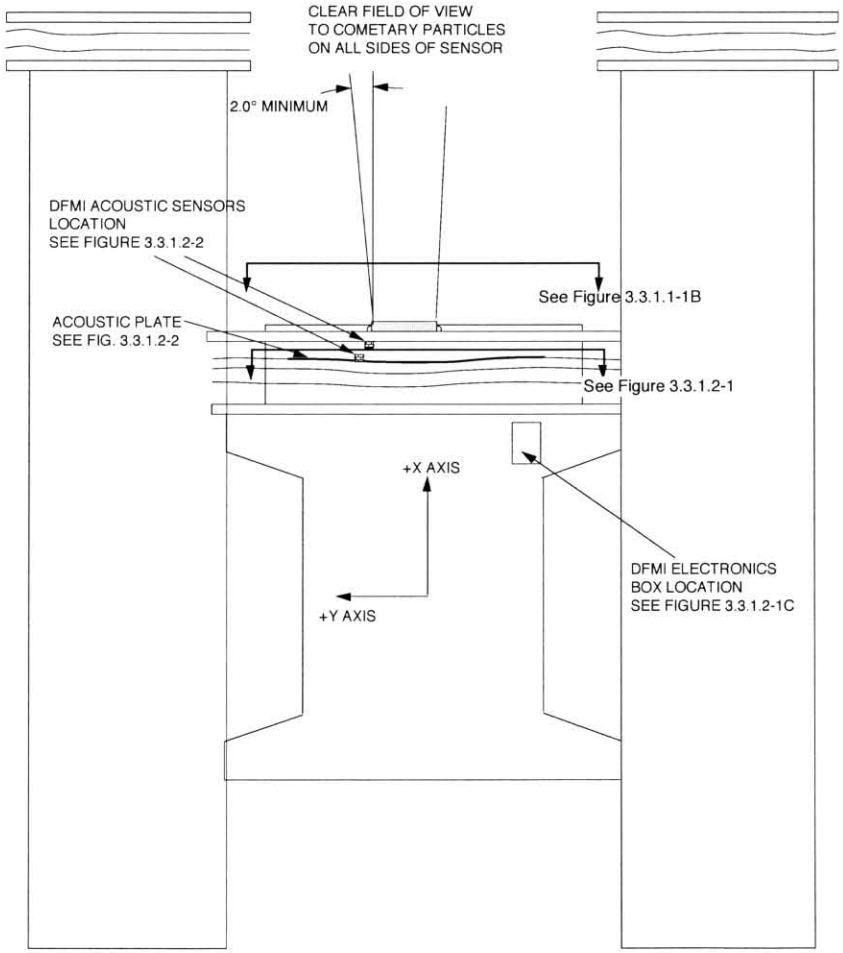

FIGURE 3.3.1.1-1 DFMI LAYOUT ON SPACECRAFT
(NO SCALE)

JPL CAMERA

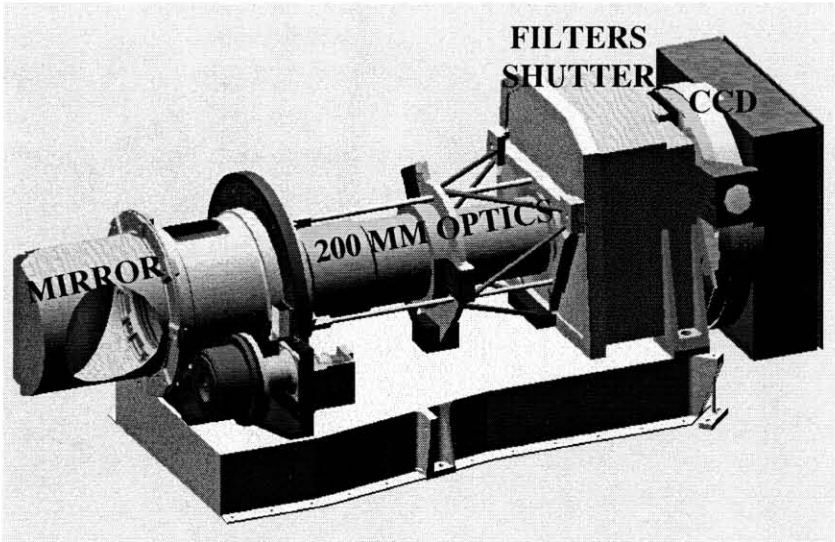

CHARACTERISTICS

- 200 mm VGR WA Optics
- 1024 x 1024 Cassini CCD
- 60 μrad / pixel
- 1 Deg-of-freedom Mirror (200 deg)
- 8 Filters

5140 ±	60	C_2 (Blue)
5800 ±	20	Yellow Continuum
5900 ±	1000	Hi Res (Nucleus)
6340 ±	60	$O[^1D]$
6650 ±	75	NH_2
7000 ±	2000	Navigation
7130 ±	30	Red Continuum
8700 ±	150	Near IR

Periscope - protect optics during approach

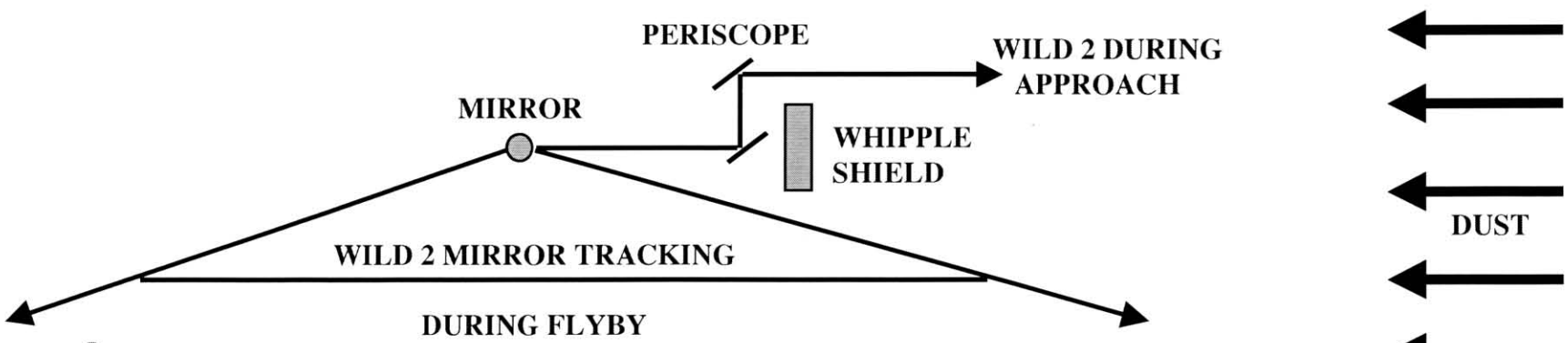

Earth Gravity Assist

- **EGA ON 15 Jan 2001 03:15 am PST**

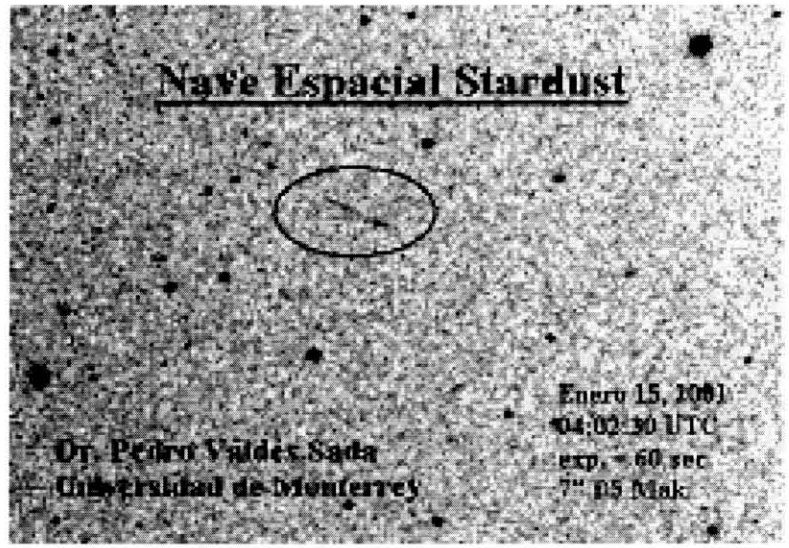

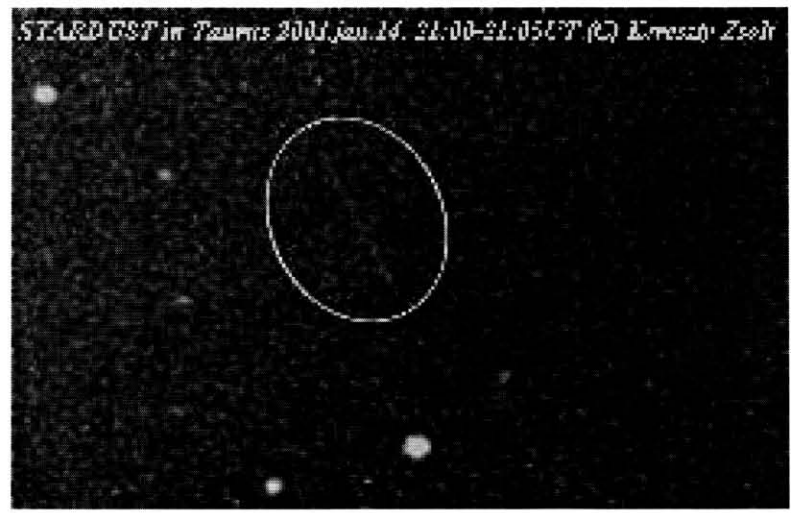

Post EGA Lunar Images

- **21 Lunar & 4 Dark Current Images**
  - **Perfectly Exposed & Pointed**

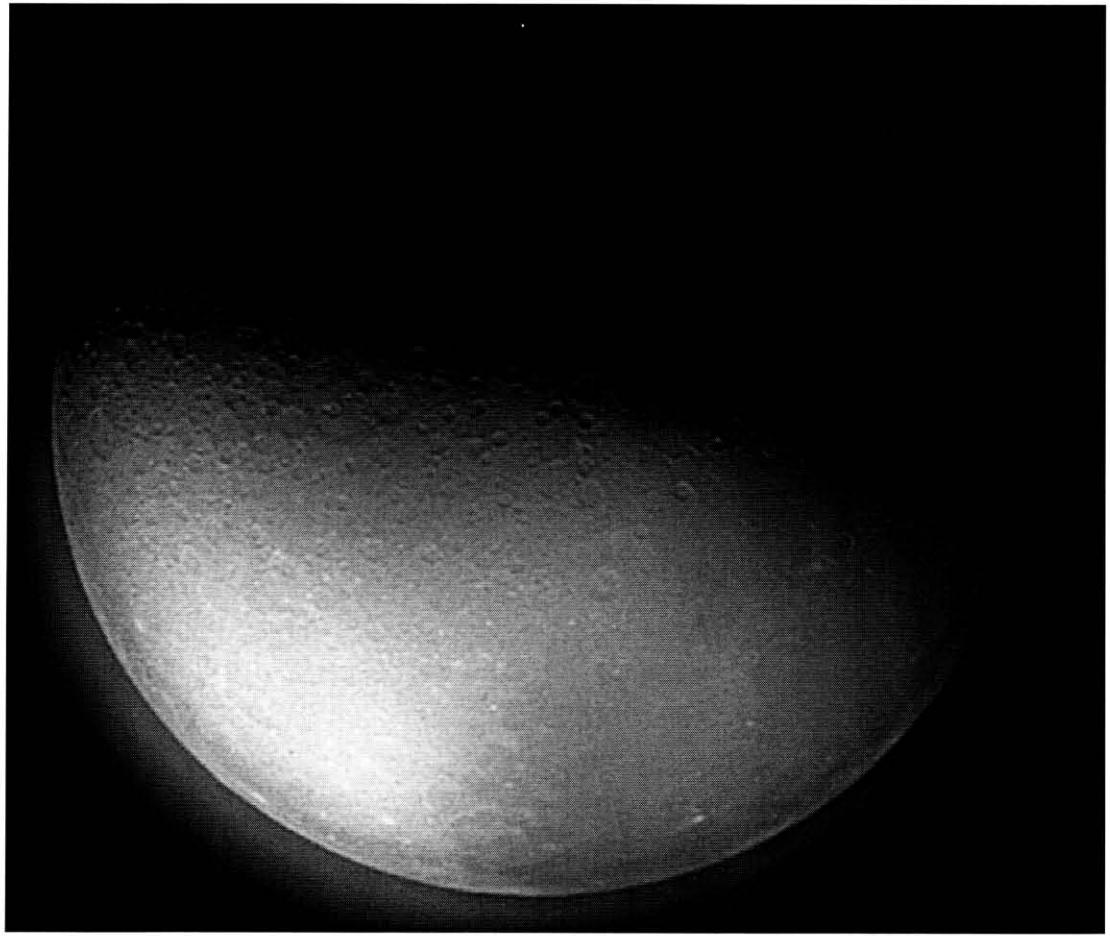

P/WILD 2 ENCOUNTER

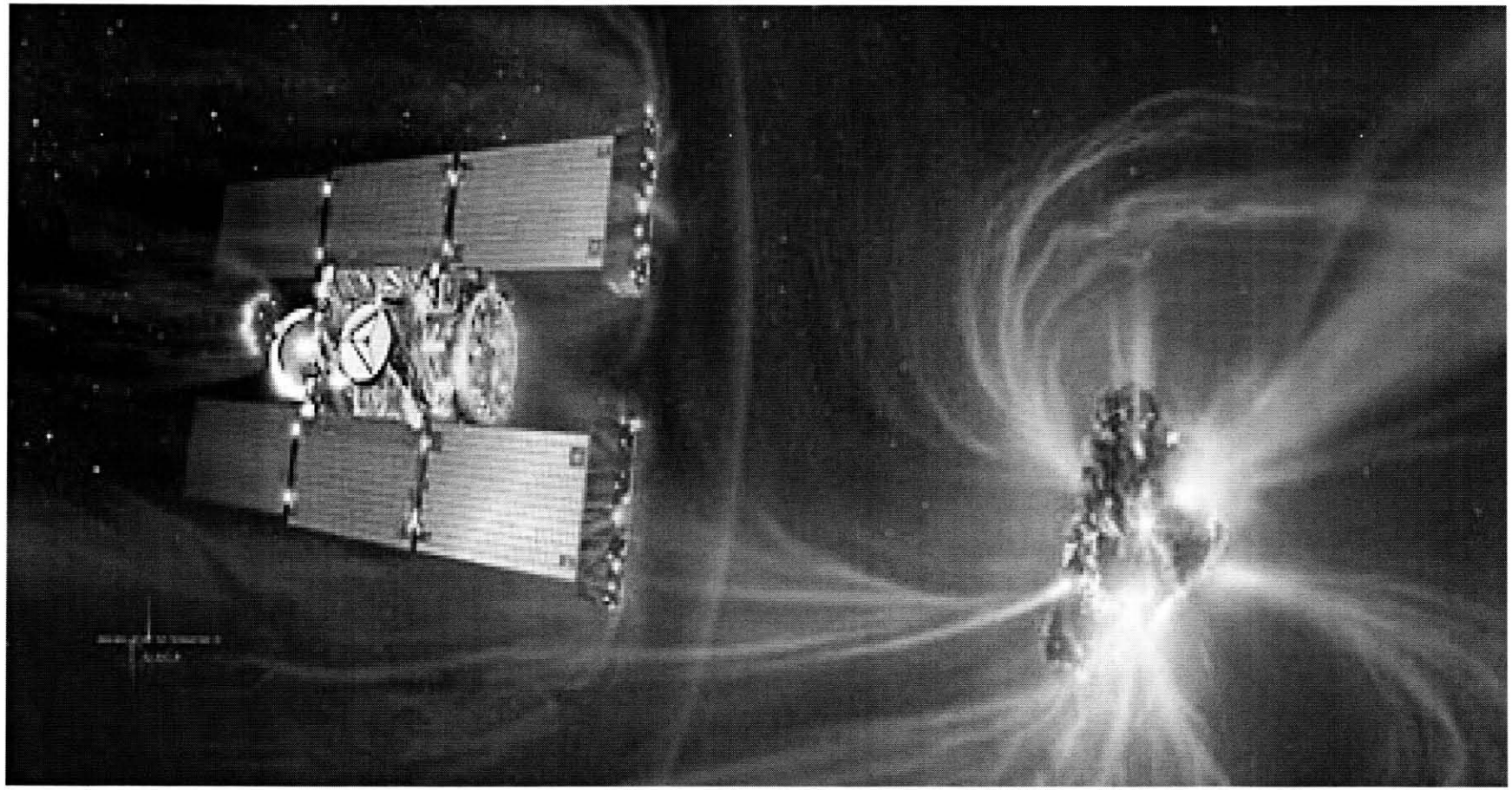

UTTR Landing - Jan 2006

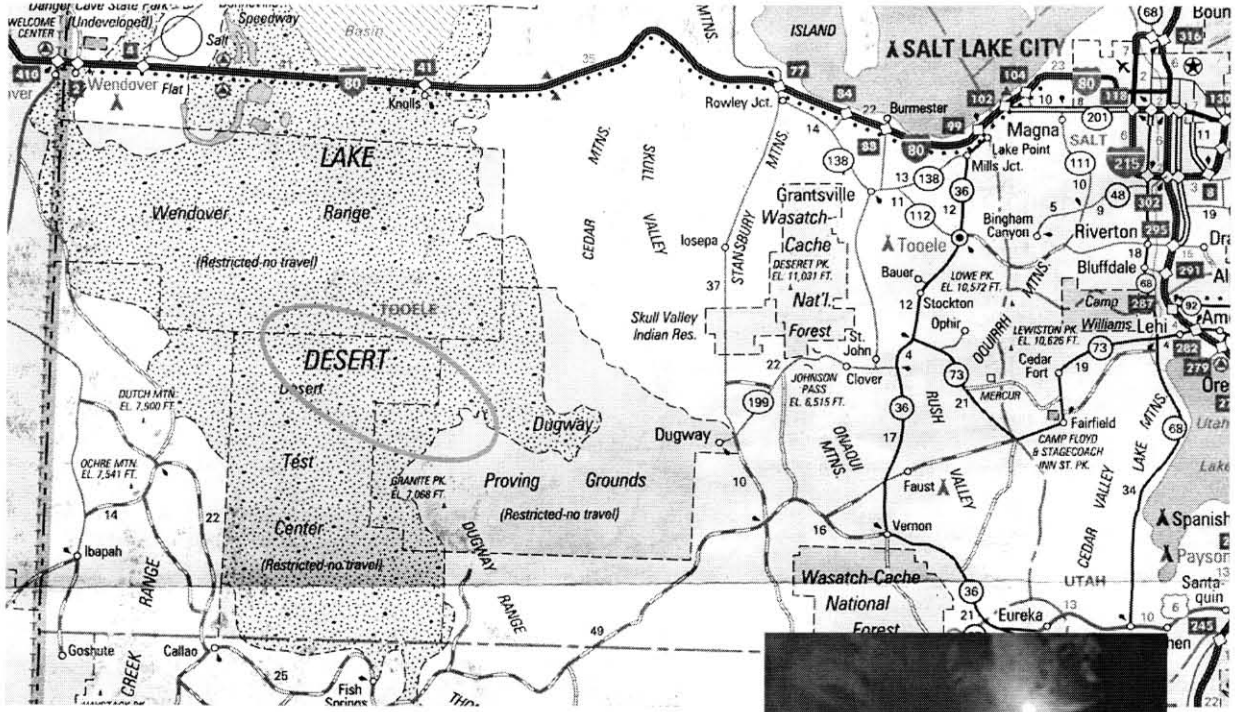

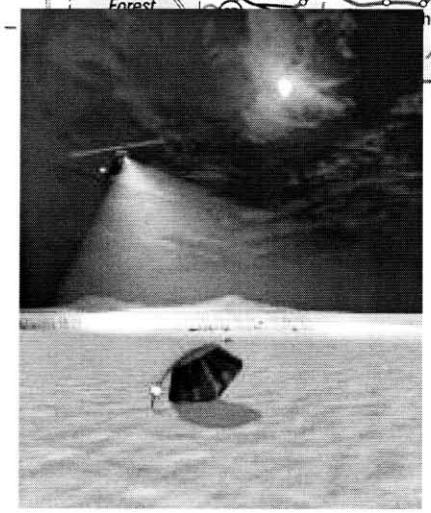

RELEASE OF PROJECT DATA

to the PLANETARY DATA SYSTEM

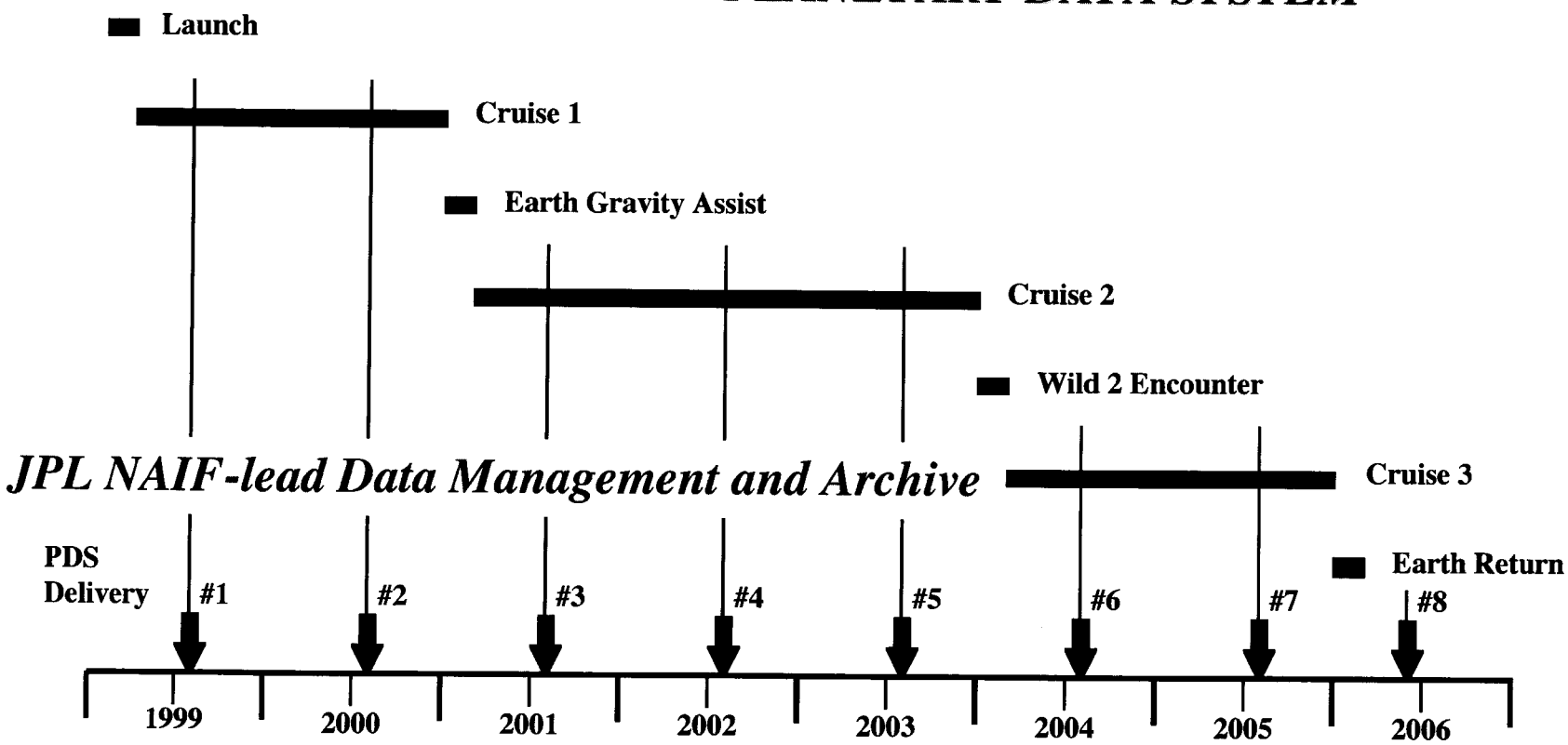

Particles to be Delivered to JSC Office of Curation
International Analysis Program will Follow