Baseline Monitoring for Astrometry in Interferometry

Michael A. Hrynevych[a], E. Robert Ligon[b], M. Mark Colavita[b]

[a]W. M. Keck Observatory, 65-1120 Mamalahoa Hwy, Kamuela, HI, 96743 USA
[b]Jet Propulsion Laboratory, California Institute of Technology, 4800 Oak Grove Drive, Pasadena, CA, 91109 USA

ABSTRACT

One of the science goals of NASA's Navigator program is ground-based narrow-angle astrometry for extra-solar planet detection, which could be done as part of the proposed Outrigger Telescopes Project. The narrow-angle measurement process, which would use the outrigger telescopes, starts with the determination of the conventional interferometer astrometric baseline, determined from wide-angle astrometry of Hipparcos stars. A baseline monitor system would be employed at each outrigger telescope. This system monitors the pivot point of each telescope – the end point of the astrometric baseline - to measure telescope imperfections that would cause the baseline to vary with telescope rotation. The baseline monitor includes azimuth and elevation cameras that monitor runout along the azimuth and elevation axes of the telescopes. In conjunction with the baseline monitor system, a pivot monitor camera in the dual-star module is used to register the laser metrology corner-cube reflector to the telescope pivot, tying the narrow-angle baseline, which applies to the narrow-angle astrometric measurement, to the wide-angle baseline. In this paper we present the proposed designs for the baseline monitor and pivot-point camera.

Keywords: Astrometry, interferometry, baseline, pivot point, narrow-angle astrometry

1.BACKGROUND

1.1. Introduction

One of the science goals of NASA's Navigator program is ground-based narrow-angle astrometry for extra-solar planet detection, which could be done as part of the proposed Outrigger Telescopes Project. Astrometry is a complementary technique to the radial velocity approach used for previous detections. For observations from the ground, in order to work around the limits imposed by atmospheric turbulence, narrow angle measurements are required. The Outrigger Telescopes Project would employ 1.8 m telescopes that would be configured to provide two nearly-orthogonal 100 m baselines. Dual Star Modules (DSM) on each of the telescopes will separate light from the target star and an astrometric reference star directing it to separate beam combiners for fringe measurement.

Interferometric astrometry converts delay measurements to angle through the knowledge of the interferometer baseline, and thus a good baseline is required for accurate astrometry. A feature of narrow-angle astrometry is that the required baseline knowledge is reduced by the size of the narrow-angle field over what would be required for a wide-angle measurement. The requirement on astrometric accuracy with the interferometer is 30 uas over an approximately 20" (0.1 mrad) field. With a 100 m baseline, this angle corresponds to 15 nm. Consequently, because of the small field, the baseline requirement is greatly loosened, and the requirement on the wide-angle baseline becomes better than 150 um (this is tightened up somewhat in the formal error budget).

To enable astrometric measurements, the outrigger telescopes would be highly optimized for astrometry. In particular, the unmodelable errors in the telescope pivots – which define the endpoints of the astrometric baseline – are required to be less than 25 um. Modelable components in the telescope pivot are monitored by a baseline monitor system. A second system, the pivot monitor system, ensures that the baseline applicable to the narrow-angle measurement – where switching between stars is accomplished by articulating a mirror in the Dual Star Module – is identical to the wide-angle baseline.

Below, we describe the process of baseline determination for narrow-angle astrometry, and the baseline monitor and pivot monitor system. We conclude with the test protocol and results from tests performed on the outrigger telescopes.

1.2. Astrometric Baseline

Astrometry requires accurate knowledge of measurement of the interferometric baseline as well as of the internal optical paths from the beam combiners to a retroreflector at the telescope. The baseline for an interferometric observation is usually understood to be the pivot point of the telescope, and ideally, one would place a retroreflector at that location for monitoring. For the outrigger telescopes, a corner cube at the pivot point in object space would face the primary mirror with its vertex coincident with the tertiary mirror surface. However, placing a physical corner cube at this location presents two problems: 1) getting light through the tertiary (and corner cube) for illumination, and 2) beam walk of the laser metrology on the telescope optics. The latter issue arises due to the nature of the narrow-angle astrometric measurement being conducted. For this measurement, the telescopes track a bright target star. The light from this star and the field around it are directed into the Dual Star Module (DSM) at the telescope's Nasmyth. Part of the light from the target star is always tracked to cophase the interferometer. The actual narrow-angle measurement is conducted by switching between the bright target star and a nearby reference star by articulating a mirror in the DSM; the change in the delay line position at which fringes are measured is the astrometric observable.

The end point for the metrology for this switching measurement is in the DSM. Better astrometry is obtained when the laser metrology is terminated at the DSM, rather than at the telescope pivot, which uses a small diameter beam. This is because a small diameter laser beam sees larger optical path differences due to minute optical imperfections as it walks across the telescope optics (when the articulating mirror in the DSM moves) than does the full diameter starlight beam. Because of its large beam diameter, the optical path through the telescope is assumed to be identical for the two stars.

To convert the measured optical delay to angle on the sky, it is necessary to know the interferometer baseline. With the metrology retro-reflectors inside the DSMs, the baseline for this measurement is the projection of these retro-reflectors into object space. Even if this projection were completely stable, it still remains to solve for the baseline. Because of the small field of view of the narrow-angle measurement, it is not possible to solve for the narrow-angle baseline from known star positions in narrow-angle mode. However, given the high quality telescope pivot, it is possible to solve for the baseline connecting the true telescope pivots from wide-angle measurements. The role of the pivot monitor is to reference the narrow-angle baseline, which we need to know, to the wide-angle baseline, which is solved from wide-angle astrometry.

Establishing the baseline for narrow-angle astrometry

There are three steps:

1. Determine the wide-angle baseline. This is done from measurements of delays for stars widely separated on the sky (done with one position of the long delay line). Using the measured delays and the a priori star positions (such as from the Hipparcos astrometric catalog), the interferometer baseline is determined with respect to the true telescope pivot point.
2. Locate the telescope fiducial with respect to the telescope pivot. The pivot determined above is just a location in space; to use the pivot monitor in the DSM, we need an optical fiducial which is at, or at a known distance from, the telescope pivot. The fiducial is inserted in a hole in the tertiary in primary space; determining its location is the purpose of the telescope pivot measurement using baseline monitor measurements.
3. Co-locate the narrow-angle and wide-angle baseline. The narrow-angle baseline is the projection of the DSM retro-reflector (which also serves as the endpoint for interferometer beam line monitoring) into the pupil containing the telescope fiducial. The pivot point camera is then used to simultaneously view the DSM corner cube and telescope fiducial. The DSM retro-reflector is translated so that it is coincident with the image of the telescope fiducial. Thus the narrow-angle baseline is now defined by the location of the telescope fiducial, whose relationship with the wide-angle baseline was determined above

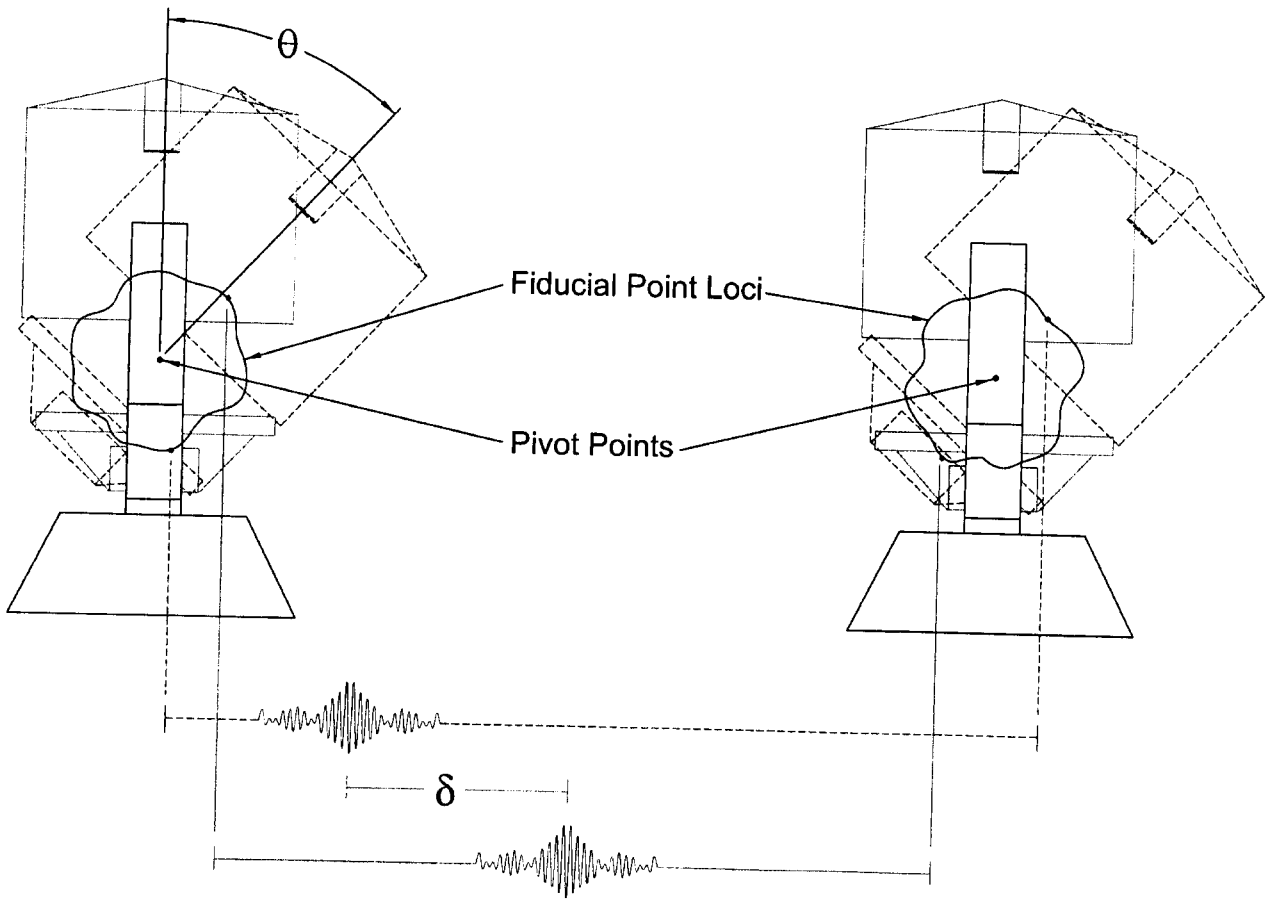

Figure 1: Relationship between the wide-angle and narrow-angle astrometric baselines. The wide-angle baseline is determined from the difference in fringe position (δ) of two widely separated stars (θ). The fiducial point loci (determined with the baseline monitor and shown here highly exaggerated) can then be used to locate each telescope pivot point and narrow-angle baseline for all outrigger telescope orientations.

An important point is that the telescope pivot must be measured and imaged in the collimated space prior to any reflections through the telescope. The primary and secondary mirrors are specified without central obscuration so that the pivot-monitor camera in the DSM can view the pivot. This requirement also constrains how the pivot gets measured in step 2.

At this time, the frequency with which the telescope pivot measurement must be performed is not well known. Conservatively this is assumed to be nightly, so a high degree of automation is required.

2.BASELINE MONITORING

2.1. Telescope Pivot Point Measurements

These measurements assume that the telescope pivot can be described by four terms that include both modelable errors due to decentration as well as errors due to flexure and runout. They are:

a) Axial runout of the elevation axis
b) Axial runout of the azimuth axis
c) Radial runout of the elevation axis

d) Radial runout of the azimuth axis

The baseline monitor will consist of instruments that will measure each of these parameters individually. The requirements on the outrigger telescopes are such that the random pivot motion shall be less than 25 um RMS while the systematic (modelable) component be less than 700 um rms. Thus, for each term above, the random and systematic components are required to be less than 12.5 um rms and 350 um rms, respectively.

2.2. Baseline Monitor

Generally, this monitor will consist of two cameras, elevation and azimuth, each of which will consist of laser metrology gauge, for axial measurements, and a CCD camera for radial measurements. The elevation camera, additionally, will need to be referenced to dome floor fiducials.

Elevation Camera

The elevation camera is an assembly of three CCD cameras, a gravitometer, and laser metrology distance gauge. These mount to an optical breadboard that attaches to the right telescope fork opposite to the DSM. One of the cameras views the tertiary fiducial to measure its lateral runout as the telescope rotates in elevation, while the laser distance gauge measures its longitudinal runout. If necessary, the elevation camera is located in 3-space (6 degrees of freedom) through a two-axis gravitometer and two auxiliary cameras which measure the apparent x, y locations of two widely-spaced dome fiducials mounted to the concrete footing inside the ring wall at the base of the enclosure. The dome fiducials will use fiber-pigtailed laser diodes positioned so that the base of the adapter is directed toward the telescope. Provision is made for a third camera to sight a third dome fiducial for testing.

Azimuth Camera

The azimuth camera is simpler than the elevation camera; it includes only a CCD camera that views the tertiary fiducial and a laser distance gauge. The camera views the tertiary fiducial to measure its lateral runout as the telescope rotates in azimuth, while the laser distance gauge measures its longitudinal runout.

3.PIVOT POINT MONITOR

As discussed earlier the ideal place to terminate the internal metrology measurement would be the pivot point of the telescope in object space, but optically this is not possible; therefore the endpoint is on the DSM table. However, the path through much of the telescope is essentially constant over the narrow-angle field of view using the full aperture starlight beam. Thus, only the transverse projection of the DSM retro-reflector need be controlled.

This pivot monitoring system uses a fiducial close to the telescope pivot point, the metrology corner cube, and a camera located on the DSM table. This camera simultaneously views the fiducial and the metrology corner cube, placed such that the camera perceives it to be in the same plane of the fiducial. The corner cube will be actuated to keep it collocated with the fiducial over the entire range of telescope orientations. Since the baseline monitor uses the same fiducial, we can now use the baseline monitor measurements to correct for the true narrow angle baseline.

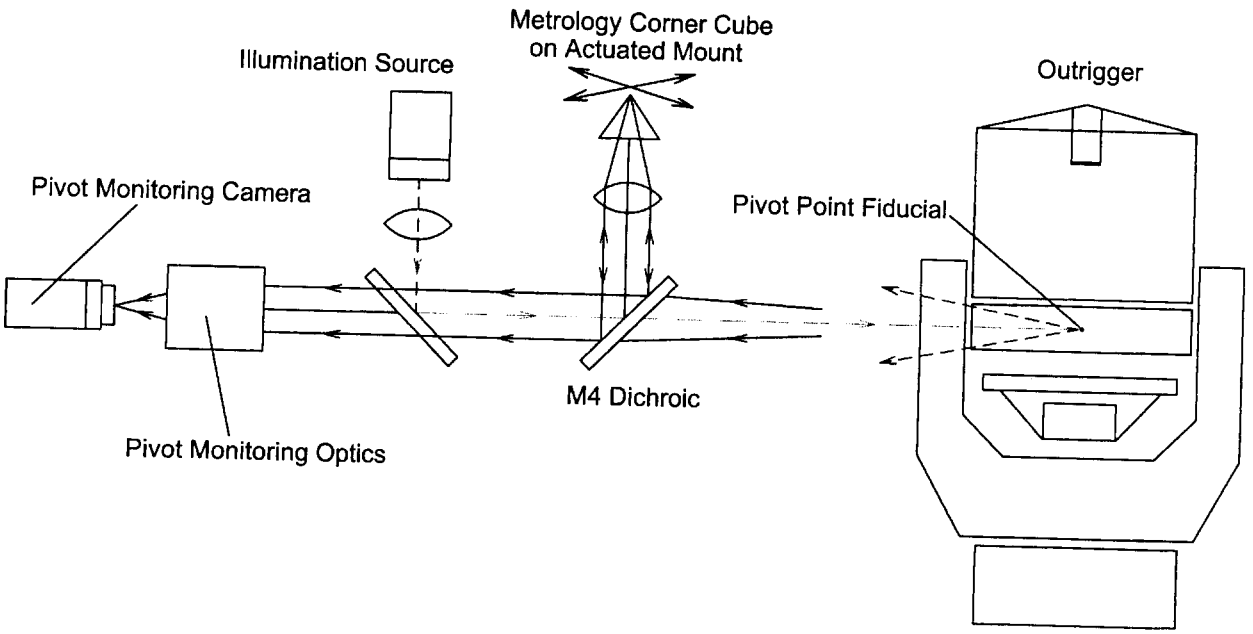

Figure 2: Schematic layout for the Pivot Point Monitor

4.PIVOT POINT TESTING OF OUTRIGGER TELESCOPES

The initial manifestation of the baseline monitor was employed in measuring the pivot point for testing of two 1.8 m telescopes. The three dimensional motions of the pivot point were obtained using two different measurement set-ups, one for the axial dimension and the other for the radial motions for both elevation and azimuth axes. Axial and radial measurements were performed with different telescope swings.

4.1. Axial Measurements

Axial pivot point motions were measured using a HP distance measuring interferometer with a corner cube mounted on a X-Y translation stage at the telescope pivot point. The hardware set-ups for the elevation and azimuth axes are shown in Figures 3 and 4 respectively. Metrology laser alignment consists of aligning the laser to the axis under test. Corner cube alignment was achieved using telescope swings about the axis under test over the entire required angular range, and ensuring that there was ample return signal, repositioning the cube as required. Azimuth axis adjustment was made by first aligning for the return signal and then rotating the telescope until there was no loss of lock over the entire rotation. The overall layout of the system for the both axes is displayed below. The system is capable of measuring to 0.1 microns.

Data collection was made at angular step increments. For the elevation axis these ranged from zenith (0 deg) to horizon (90 deg) at 5 degree intervals. The azimuth axis was measured at 10 degree intervals over the full circular rotation, with zero degrees at the nominal encoder zero position.

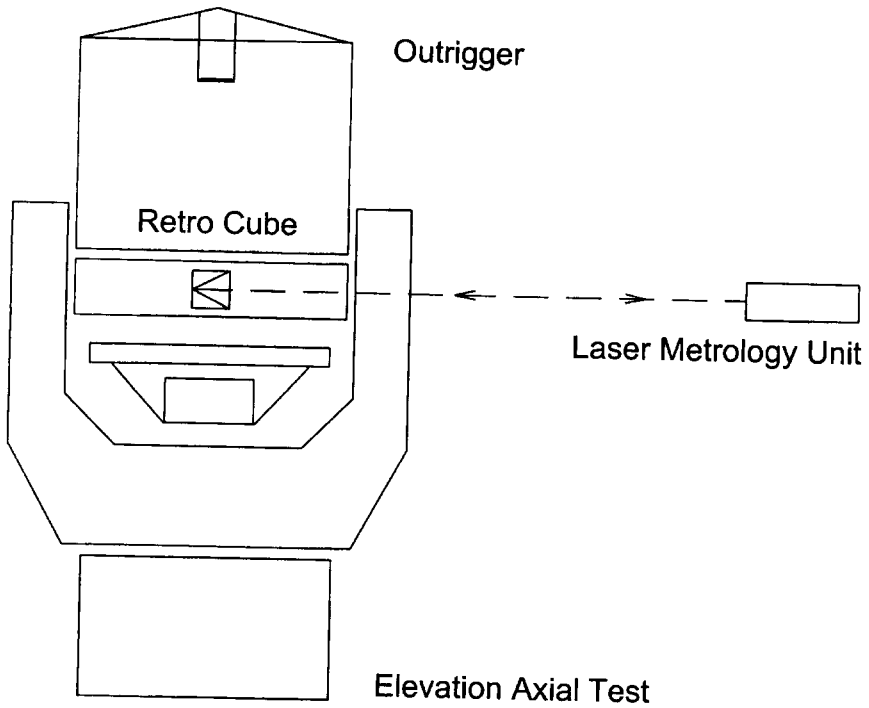

Figure 3: Axial Run-out measurement set-up for the Elevation axis.

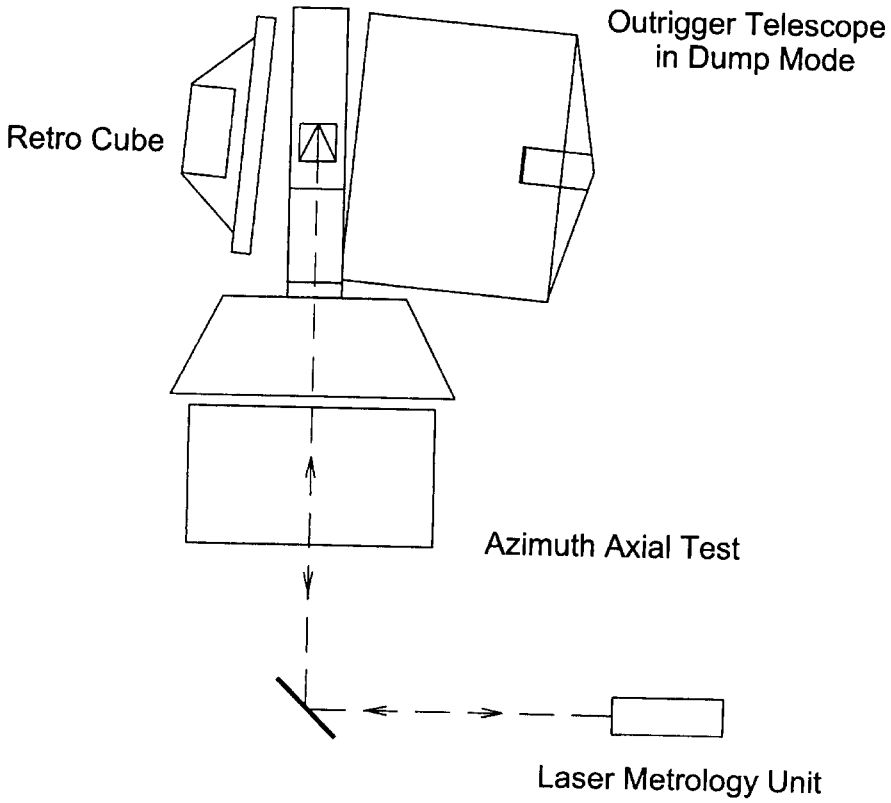

Figure 4: Axial Run-out measurement set-up for the Azimuth axis.

4.2. Radial Measurements

Radial pivot point measurements were made with a laser fiber source located in a X-Y translation stage at the pivot point as shown below for the two axes in Figures 5 and 6. This was imaged by a 2" diameter 750 mm focal length lens to a primary focus just before a 40X microscope objective. The objective produces the final focus on an On-Trak position sensitive detector (PSD). Measurements were then displayed and collected with a Fluke digital storage oscilloscope.

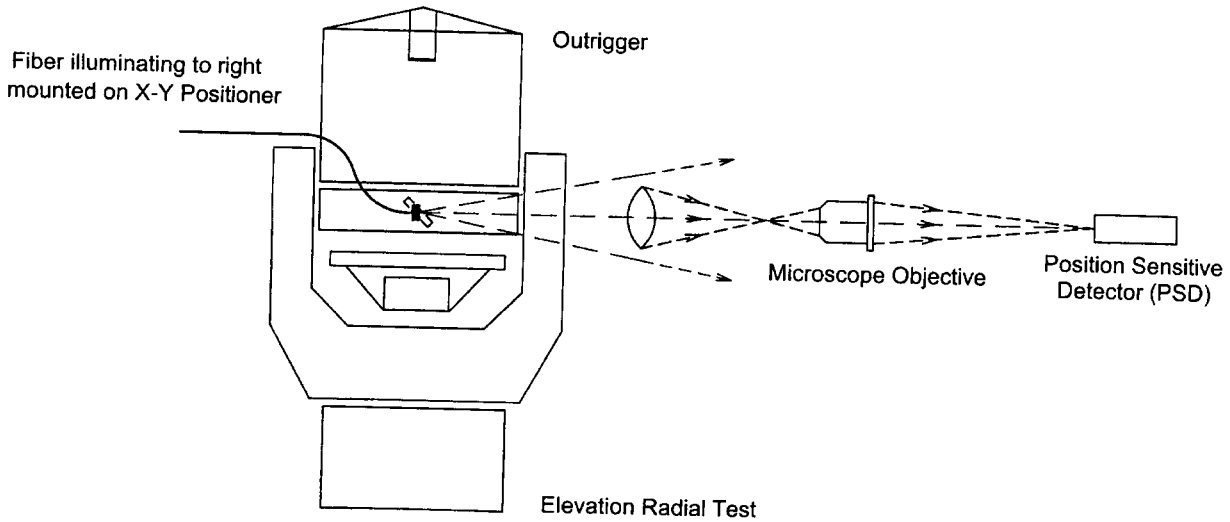

Figure 5: Radial run-out measurement set-up for the Elevation axis.

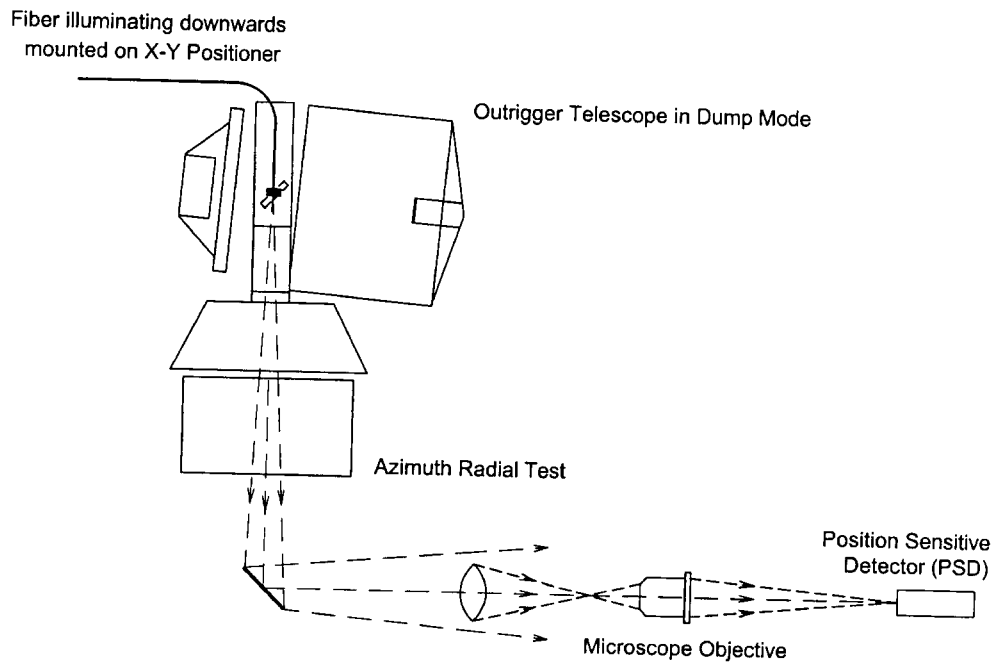

Figure 6: Radial run-out measurement for the Azimuth axis.

Alignment for both axes was made by initially removing the objective and placing the PSD at the focus of the primary lens. The telescope was then swung about this axis (preferably through 180 degrees or as large a swing as possible) and the trace of the pivot point obtained. Adjustment of the fiber was then be made to the center of the resulting circular arc. A further telescope swing was then made to confirm centration and making adjustments and further swings as required.

The objective is then replaced and the PSD returned to its position. Further telescope swings can then made, the pivot point trace observed and adjustments continue to be made to center the pivot point at finer precision. Calibration of the system was made by moving the fiber in the translation stage a known amount (typically 50 um) in both X and Y, separately, and measuring the corresponding motion on the PSD detector using the oscilloscope. The limit of resolution of this measurement technique was deduced at 2.2 um rms in X and 1.7 um rms in Y for the azimuth axis. These are expected to be smaller for the elevation axis as the fiber-PSD distance is significantly less so that air turbulence effects will be smaller.

4.3. Results and Data Analysis

The requirement on the telescope is that the pivot point lies within 25 um rms from the modelable component of the pivot point motion that, in turn, should be less than 700 um. This is broken down into the radial and axial components for each of the axes described above. Each of these is required to be less than 12.5 um for the random component and less than 350 um for the systematic component. Modeling of these components is by fitting to the harmonic equation of fourth order,

$$f(\theta) = c + b_0\theta + \sum_{n=1}^{n=4} a_n\cos(n\theta) + b_n\sin(n\theta)$$

where θ is the physical rotation angle, c, b_0, and the values of the a_n, b_n 's are constants of the modeling or fitting.

Data were analyzed as being made up from positive and negative telescope swings for each axis and for axial and radial tests separately. Axial data consisted of measurements of the axial motion relative to the first measurement of a swing. Radial data consisted of x and y pivot point motions projected in a plane normal to the rotation axis. It is not possible to keep the same origin point between each successive telescope swing to a level not measurable by the experiment. To enable these swings to be analyzed together each swing had to be translated to a common origin. This was achieved by finding the centroid of the data points of each swing and then subtracting this from each data point. Initially positive and negative swings were combined and modeled separately. Finally fits were made to all the data combined. The rms of the fit, representing the random component, was then calculated.

The data and fits to the measurements are shown in the graphs that follow. From these graphs the requirement for the modelable term (< 350 um) for each of the four components has been readily satisfied over the range of measurement, as has the requirement for the random term for each component (< 12.5 um rms) can be seen to be have been easily met.

The primary requirement that the random pivot motion be < 25 um rms can be shown satisfied by summing in quadrature the random terms of each of the four components. From the entire measurement sample this is calculated from the rms to the fit as follows:

	Axial	Radial X	Radial Y	Total
	um rms	um rms	um rms	um rms
Elevation	1.42	2.19	3.07	4.03
Azimuth	7.31	4.64	5.01	10.00
Combined				10.78

Likewise, the condition that modelable motion of the pivot point motion to be < 700 um can be calculated from the maximum extents of motion of each component:

	Axial (um)	Radial X (um)	Radial Y (um)	Total (um)
Elevation	20	80	70	108
Azimuth	20	60	30	70
Combined				130

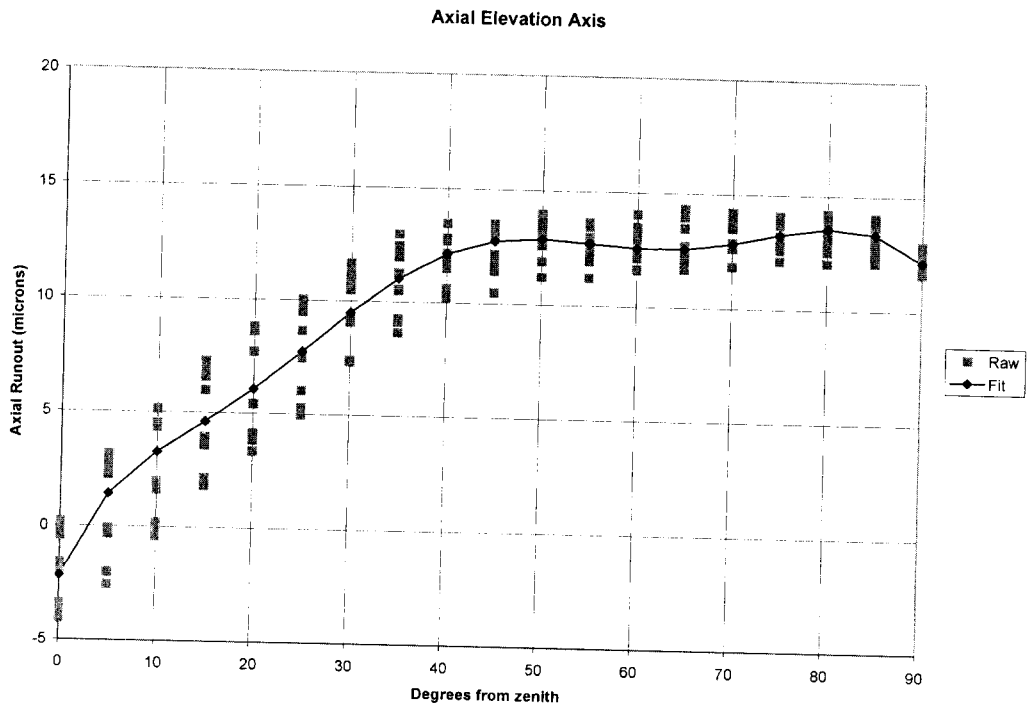

Figure 7: Axial Elevation Axis Runout – Raw data and 4th order Harmonic fit.

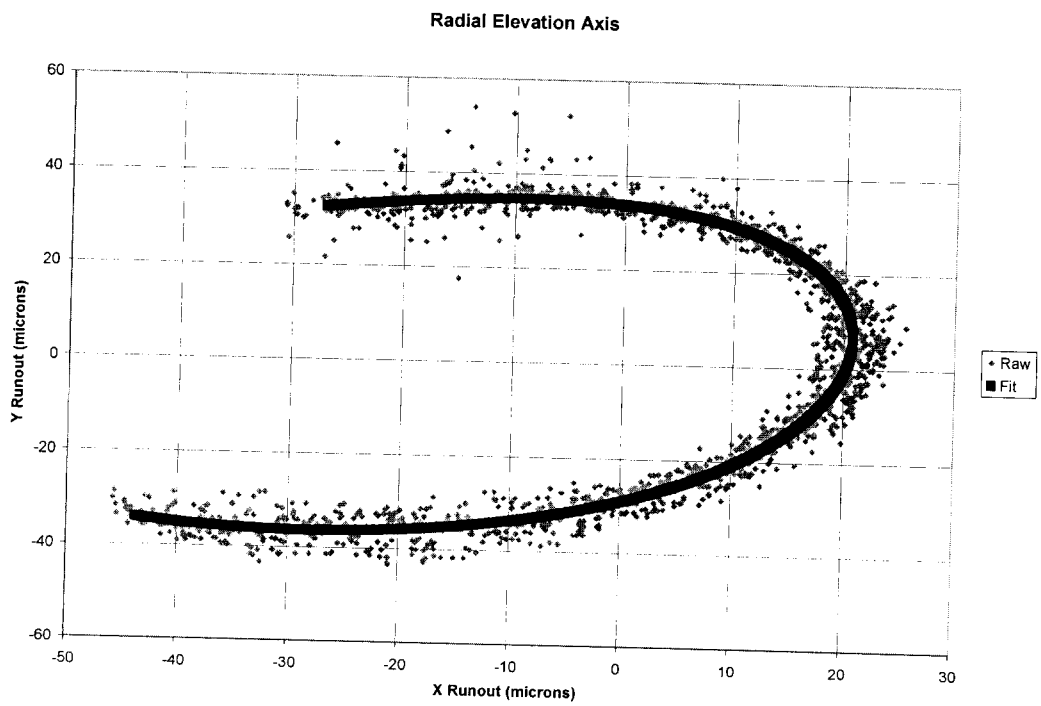

Figure 8: Radial Elevation Runout – Raw data and 4th order Harmonic fit

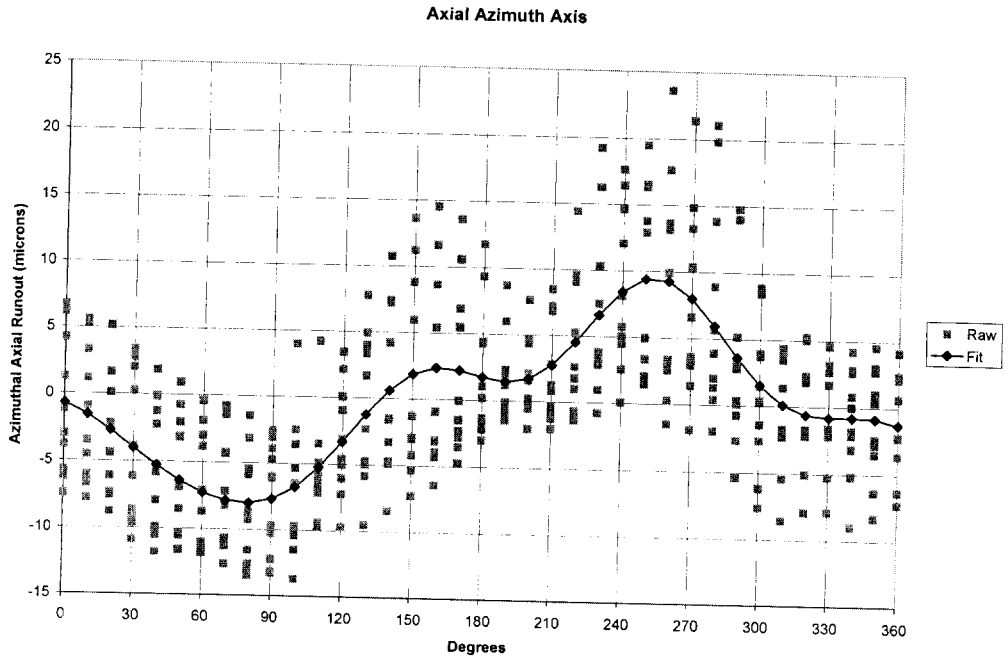

Figure 9: Axial Azimuth Runout – Raw data and 4th order Harmonic Fit

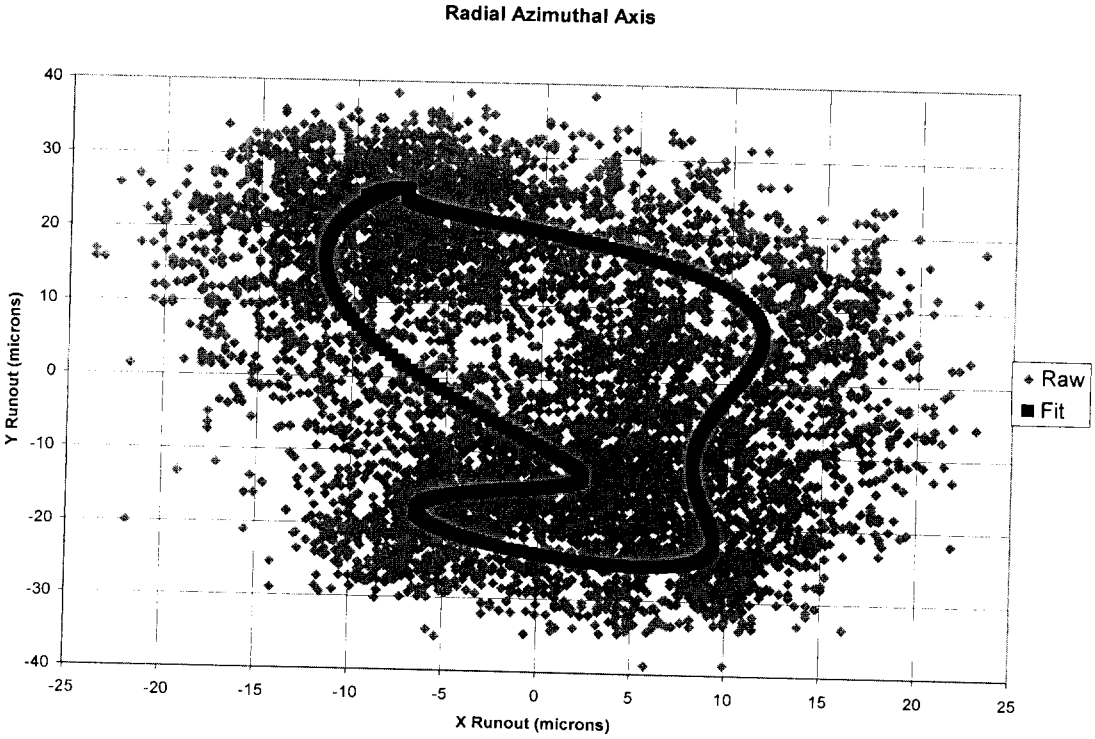

Figure 10: Radial Azimuth Runout

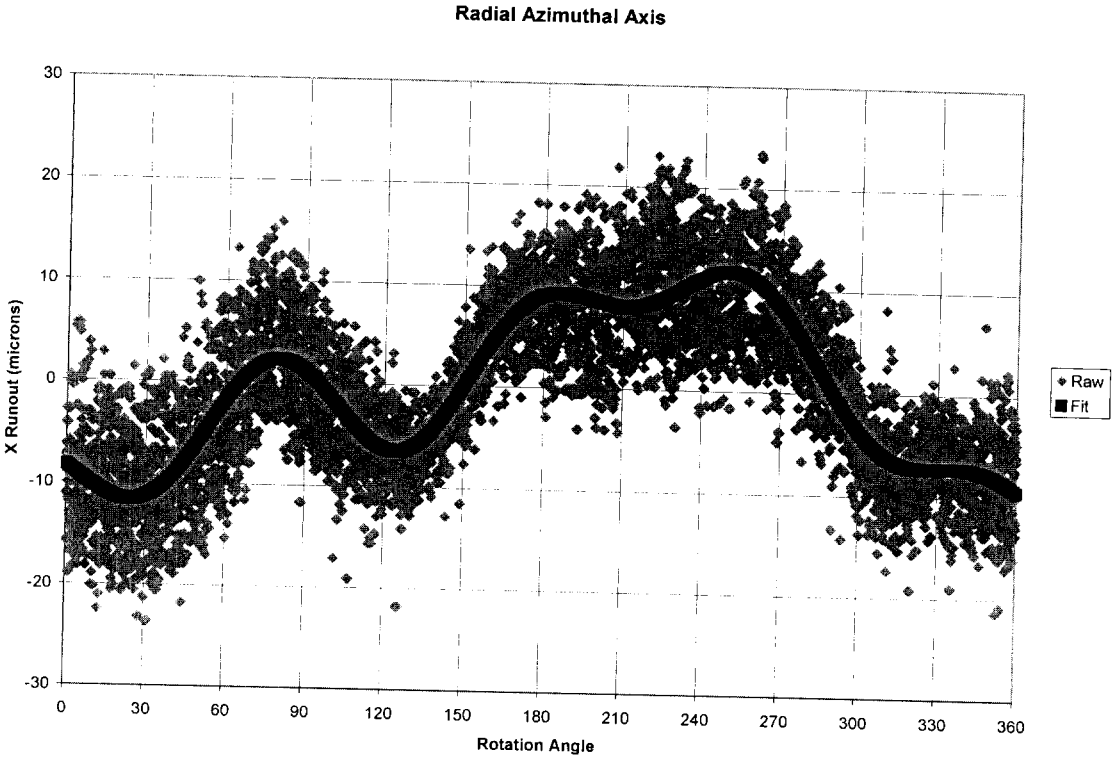

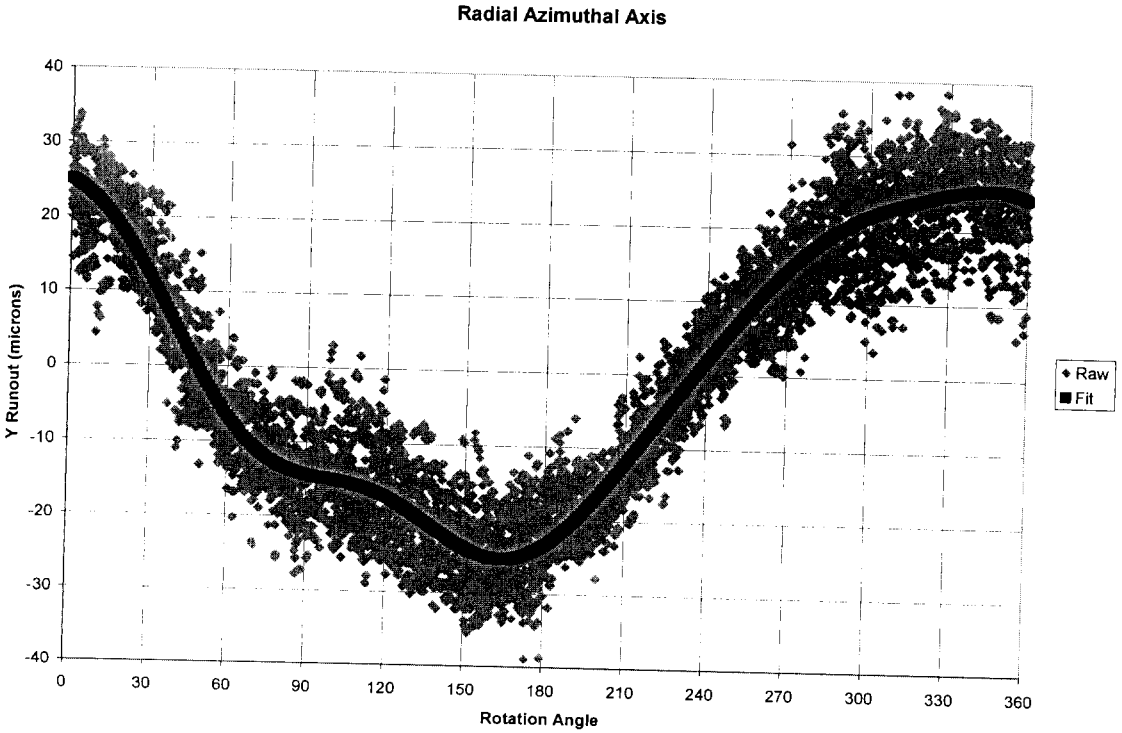

Figure 11: Radial Azimuth axis runout plotted as a function of azimuth angle for both the X and Y co-ordinates of the data in Figure 10. The clustering of points is a testament to the precision achieved with the outrigger telescope bearings.

CONCLUSIONS

The method of measuring the pivot point motion discussed here has been shown to accurately and repeatably measure pivot point motion and have been used in the testing of two 1.8 m telescopes. The results are encouraging for the final design of the baseline monitor. During the measurements it was noted that there were drifts of the measuring equipment relative to the telescope under test. These drifts tended to be in the vertical plane. Further work that needs to be addressed is to test the proposed scheme of monitoring the position of the baseline monitoring camera with respect to telescope base fiducials.